LV Motors

European Market

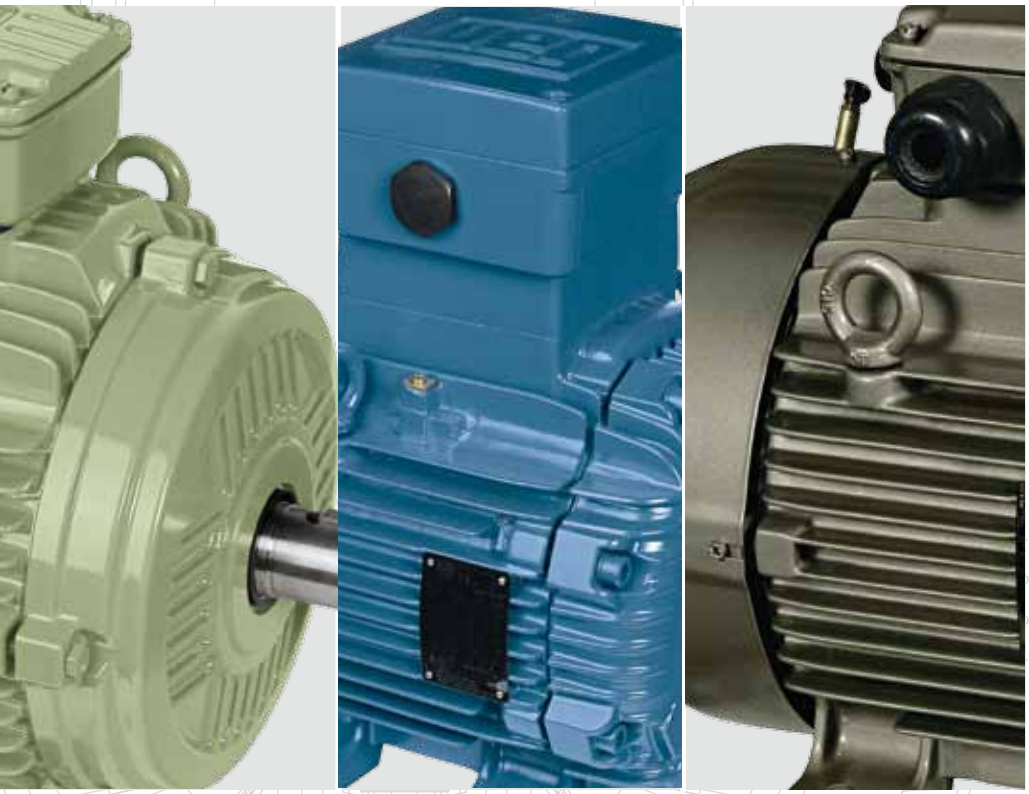

About WEG

Founded in 1961, WEG is acknowledged today as one of the largest manufacturers of electric motors in the world. Twenty thousand people are employed in the different manufacturing units which cover over 500,000 square meters of constructed area.
In support of exports in over 100 countries worldwide, WEG has branch offices located in all five continents. WEG's great success with export activities is based on the company's willingness to meet worldwide standard requirements, keeping product inventories in strategic locations, personnel training and prompt service.

Worldwide Entities that Have Approved WEG

Table of Contents

W21 - Cast Iron Frame Motors
Improved Efficiency EFF2 4-13
Premium Efficiency EFF1 14-23
Top Premium Efficiency 24-31

Aluminium Frame Motors
Improved Efficiency EFF2 32-37
Premium Efficiency EFF1 38-43
Top Premium Efficiency 44-49

Brake Motors
Improved Efficiency EFF2 - Cast Iron Frame 50-55
Premium Efficiency EFF1 - Cast Iron Frame 56-61
Top Premium Efficiency Exceeds EFF1 - Cast Iron Frame 62-65
Improved Efficiency EFF2 - Aluminium Frame. 66-71
Premium Efficiency EFF1 - Aluminium Frame 72-77

Permanent Magnet Motors Drive System - Cast Iron Frame
Permanent Magnet Motors Drive System 78-81

Inverter Duty Motors
Improved Efficiency EFF2 - Cast Iron Frame 82-91

Three Phase ODP Motors
Improved Efficiency EFF2 - Cast Iron Frame 94-99

Single Phase Motors
Improved Efficiency EFF2 - Cast Iron Frame 100-103
Multi-Mounting Improved Efficiency EFF2 - Aluminium Frame 104-107

Fan and Exhaust Application Motors
Improved Efficiency EFF2 - Cast Iron Frame 108-127
Improved Efficiency EFF2 - Aluminium Frame 128-135

Smoke Extraction Motors
Improved Efficiency EFF2 - Aluminium Frame 136-169

Hazardous Area Motors
Explosive Atmosphere 170-177
Ex d / Ex de - Explosion Proof Motors- Improved Efficiency EFF2 178-183
Ex d / Ex de - Explosion Proof Motors- Premium Efficiency EFF1 184-195
Ex d - Explosion Proof Motors With Brake - Improved Efficiency EFF2 196-199
Ex d - Explosion Proof Motors With Brake - Premium Efficiency EFF1 200-205
Ex e - Increased Safety Motors - Improved Efficiency EFF2 206-209
Ex nA - Non Sparking Motors - Improved Efficiency EFF2 210-215
Ex nA - Non Sparking Motors - Premium Efficiency EFF1 216-221
Ex nA - Non Sparking Motors - Top Premium Efficiency Exceeds EFF1 222-227
Cast Iron Frame Motors For Zone 21 - Improved Efficiency EFF2 228-233
Cast Iron Frame Motors For Zone 21 - Premium Efficiency EFF1 234-239
Cast Iron Frame Motors For Zone 21 - Top Premium Efficiency Exceed EFF1 240-246

Marine Motors
Marine Motors 247-250
Safe Areas 251-263
Hazardous Areas (IIB) 264-276
Hazardous Areas (IIC) 277-285

Additional Information
Painting Plans 286
Standard Mounting Configurations 287

W21 - Cast Iron Frame Motors Improved Efficiency EFF2

Standard Features:

- Three-phase, multivoltage, IP55, TEFC
- Output: 0.12 up to 355kW
- Frames: 63 up to 355M/L
- Voltage: 220-240/380-415V (up to 100L)
  380-415/660V (from 112M and up)
- Class “F” insulation (ΔT=80K)
- Continuous duty: S1
- Design N
- Ambient temperature: 40°C, at 1000 m.a.s.l.
- Squirrel cage rotor/Aluminium die cast
- V’Ring on both endshields
- Stainless steel nameplate AISI 316
- Dimensions according to IEC-72
- Performance characteristics according to IEC 34
- Regreasing nipple from frame 225S/M and above
- Metric threaded cable entries on the terminal box
- Thermistors (1 per phase) fitted in frame 160M and above
- Suitable for inverter duty applications
- Color: RAL 5007

Options Available:

- Degree of Protection: IP56, IP65 or IP66
- Bearing seals:
  - Lip seal
  - Oil seal
  - Labyrinth taconite seal and W3seal for frames 90S and above
- Thermal protection:
  - Thermistors: frame 132M and below
  - Thermostats
  - RTD-PT 100
- Space heaters
- Design H
- Class “H” insulation
- Roller bearings for frame 160M and above

More options available, on request

Typical Applications:

- Pumps
- Fans
- Crushers
- Conveyor belts
- Mills
- Centrifugal machines
- Presses
- Elevators
- Packaging equipment
- Grinders and others.

Bearings
WEG motors are fitted with the highest quality bearings selected from the best manufacturers in the world and designed to ensure long life of the motor even under heavy operating conditions.

Fan cover
Made of steel plate for frames 63 up to 132M and of cast iron for frames 160M and above. It provides higher mechanical strength, corrosion resistance and extended lifetime.

Fan
WEG has designed the fan and fan cover having in mind the lowest noise level. The efficient cooling ensures low motor temperature rise and minimizes winding losses, thus increasing motor efficiency. The W21 line is supplied with anti-static polypropylene fans from 63 up to 315S/M frames and aluminium for 355M/L frame. Alternatively, cast iron or aluminium fans can be supplied on request for all frames.

Frame
WEG motors are made of FC-200 high-grade cast iron (same density as flameproof motors). The frames are provided with fins aimed at improving the heat dissipation and adequately spaced to minimize air blockage due to accumulation of dirt. The motors can be mounted in horizontal or vertical positions.

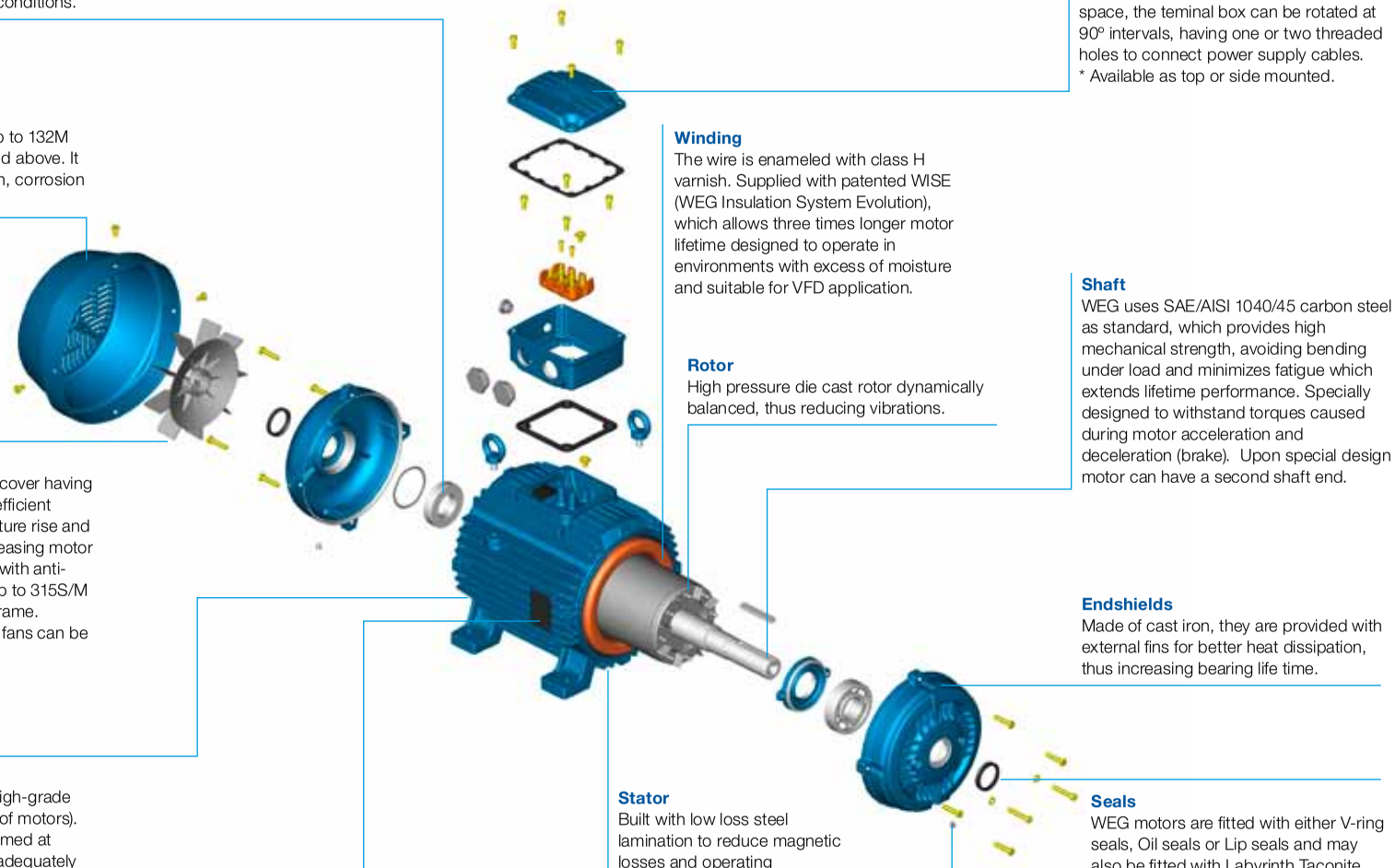

Terminal Box
Made of cast iron with plenty of internal space, the teminal box can be rotated at 90º intervals, having one or two threaded holes to connect power supply cables.
* Available as top or side mounted.

Winding
The wire is enameled with class H varnish. Supplied with patented WISE (WEG Insulation System Evolution), which allows three times longer motor lifetime designed to operate in environments with excess of moisture and suitable for VFD application.

Rotor
High pressure die cast rotor dynamically balanced, thus reducing vibrations.

Shaft
WEG uses SAE/AISI 1040/45 carbon steel as standard, which provides high mechanical strength, avoiding bending under load and minimizes fatigue which extends lifetime performance. Specially designed to withstand torques caused during motor acceleration and deceleration (brake). Upon special design motor can have a second shaft end.

Endshields
Made of cast iron, they are provided with external fins for better heat dissipation, thus increasing bearing life time.

Stator
Built with low loss steel lamination to reduce magnetic losses and operating temperature.

Seals
WEG motors are fitted with either V-ring seals, Oil seals or Lip seals and may also be fitted with Labyrinth Taconite seals or W3Seal to ensure the best possible protection under dusty and high moisture environments.

Nameplate
Stainless steel nameplate ensuring a permanent record of all motor data.

Drain Hole
Provided with plastic drain plug allowing drainage of condensed water.

W21 - Cast Iron Frame Motors - Improved Efficiency EFF2

Output		IEC Frame	Full load torque C_n (Nm)	Locked rotor current I_l/I_n	Locked rotor torque T_l/T_n	Break-down torque T_b/T_n	Inertia J kgm²	Allowable locked rotor time Hot/Cold (s)	Weight (kg)	Sound dB (A)	Rated speed (rpm)	400 V						Full load current I_n (A)
												% of full load						
												Efficiency η			Power Factor (Cos φ)			
kW	HP											50	75	100	50	75	100	
II Pole - 3000 rpm																		
0.12	0.16	63	0.41	3.8	2.3	2.3	0.00011	27/59	6.7	52	2720	45.5	53.5	56	0.55	0.68	0.8	0.387
0.18	0.25	63	0.64	4.2	2.4	2.3	0.00013	30/66	6.7	52	2730	50.5	56.5	59	0.55	0.69	0.8	0.55
0.25	0.33	63	0.85	4.3	2.5	2.3	0.00016	25/55	7	52	2720	52	57	60	0.5	0.65	0.76	0.791
0.37	0.5	71	1.29	4.3	2.3	2.3	0.00026	23/51	8.8	56	2730	61.2	66	67.6	0.6	0.75	0.85	0.929
0.55	0.75	71	1.94	4.2	2.5	2.7	0.00034	10/22	9.6	56	2710	67.5	70	70	0.65	0.78	0.87	1.3
0.75	1	80	2.54	5	2.4	2.4	0.00057	9/20	12	59	2770	66	72	73	0.59	0.73	0.82	1.81
1.1	1.5	80	3.8	5	2.6	2.6	0.00079	7/15	13.5	59	2770	74	76.5	76.5	0.6	0.75	0.83	2.5
1.5	2	90S	4.95	6.3	2.7	2.6	0.0017	7/15	18.9	64	2840	77	79.5	79.5	0.63	0.76	0.83	3.28
2.2	3	90L	7.5	6.8	2.8	2.9	0.00218	9/20	21.3	64	2810	78	80	81.5	0.63	0.77	0.85	4.584
3	4	100L	9.79	6.7	2.3	2.8	0.00518	9/20	28.6	67	2870	81.3	83	83.5	0.69	0.81	0.87	5.961
4	5.5	112M	13.44	6.8	2.4	3	0.00728	9/20	39	64	2875	82	84	85	0.71	0.82	0.87	7.81
5.5	7.5	132S	18.1	6.5	2.4	3	0.01589	11/24	54.2	68	2910	83.5	86	86.5	0.71	0.81	0.87	10.5
7.5	10	132S	24.22	6.4	2.3	2.6	0.0187	11/24	66.7	68	2900	86	87.5	87.5	0.72	0.82	0.87	14.2
9.2	12.5	132M	30.17	7.5	2.7	3.1	0.02431	8/18	64.4	68	2910	86.5	88.5	88.5	0.7	0.81	0.86	17.4
11	15	160M	35.96	6.5	2	3	0.0353	11/24	98.1	70	2930	87	88.5	88.8	0.7	0.81	0.86	20.8
15	20	160M	47.86	7.4	2.2	3.1	0.04707	9/20	107.9	70	2935	88	90	90.1	0.69	0.8	0.86	27.9
18.5	25	160L	59.83	8	2.5	3.2	0.05589	7/15	129.3	70	2935	89	90.5	90.7	0.67	0.78	0.86	34.2
22	30	180M	71.55	7.3	2.3	3.2	0.09649	11/24	185.1	70	2945	91	92	92	0.74	0.83	0.87	39.7
30	40	200L	94.92	7.3	2.6	2.9	0.1794	13/29	229.8	74	2960	91	92	92.4	0.7	0.8	0.85	55.1
37	50	200L	118.65	7	2.6	2.8	0.2063	12/26	265.5	74	2960	91	92	92.5	0.71	0.8	0.86	67.1
45	60	225S/M	142.38	7	2.3	3.1	0.31392	16/35	351.8	82	2960	91.2	92.4	92.7	0.78	0.85	0.88	79.6
55	75	250S/M	177.67	7.5	2.4	3.2	0.37671	13/29	401.9	82	2965	92	93	93.3	0.77	0.85	0.88	96.7
75	100	280S/M	235.7	8	2.4	3.2	1.08257	22/48	658.2	83	2980	91.6	93.4	93.9	0.76	0.85	0.88	131
90	125	280S/M	294.63	8	2.4	3.2	1.1767	19/42	682.5	83	2980	92	93.6	94.2	0.78	0.85	0.88	157
110	150	315S/M	354.15	7.7	2.4	3	1.41204	21/46	806	84	2975	93	94.2	94.5	0.78	0.85	0.88	191
132	175	315S/M	413.17	7.5	2.4	3	1.64738	18/40	868.5	84	2975	93.6	94.7	94.8	0.8	0.87	0.89	226
160	220	315S/M	519.42	7.5	2.6	3.1	2.11806	17/37	981.2	84	2975	94.3	95	95.1	0.83	0.88	0.9	270
200	270	315B	637.47	6.4	1.8	2.8	2.8101	30/66	1415	92	2975	92	93.4	93.7	0.72	0.82	0.85	362
200	270	355M/L	635.33	7.2	1.8	2.6	4.82631	70/154	1490	81	2985	93.5	95	95.4	0.89	0.91	0.92	329
250	340	315B	804.09	6.5	1.9	2.7	3.212	27/59	1490	92	2970	93	94	94.4	0.75	0.83	0.86	444
250	340	355M/L	800.05	7.8	2.2	2.5	5.74561	65/143	1750	81	2985	94.4	95.8	96	0.88	0.91	0.92	409
315	430	315B*	1016.94	6.7	1.9	2.6	4.0145	19/42	1590	92	2970	93.8	94.6	94.6	0.79	0.86	0.88	546
High-Output Design																		
0.37	0.5	63	1.28	5.2	3.1	2.9	0.00021	14/31	7.9	52	2740	67	71	71.3	0.57	0.7	0.79	0.948
0.75	1	71	2.5	6.2	3.1	3.1	0.00052	8/18	11.1	56	2810	69	73	74	0.65	0.76	0.84	1.74
1.5	2	80	5.07	6	3	2.7	0.00096	10/22	14.9	59	2770	77	78.5	77.7	0.7	0.82	0.87	3.2
2.2	3	90S	7.5	6.8	2.8	2.9	0.00218	9/20	19	64	2810	78	80	81.5	0.63	0.77	0.85	4.584
3	4	90L*	9.93	6.2	3.2	3.1	0.00266	6/13	21.8	64	2830	81	82	82	0.55	0.68	0.78	6.77
4	5.5	100L	13.46	7.5	2.9	3.1	0.00672	7/15	31.1	67	2870	81	82.3	82.5	0.72	0.81	0.86	8.14
5.5	7.5	112M	18.36	7.7	2.5	3	0.00995	10/22	45.8	64	2870	86.5	87.5	87.5	0.8	0.87	0.9	10.1
7.5	10	112M*	24.47	7.6	3	3	0.00995	6/13	46.3	64	2870	86.5	87.5	87.5	0.59	0.72	0.81	15.3
11	15	132M	36.08	8	2.7	3.2	0.02804	8/18	73.6	68	2920	88	89.5	89.5	0.71	0.81	0.86	20.6
22	30	160L*	71.92	7.5	2.5	3	0.06766	6/13	133.3	70	2930	90	90.6	90.7	0.72	0.82	0.86	40.7
30	40	180L*	95.4	8.7	2.5	3.1	0.13622	9/20	191.4	70	2945	92	92.7	92.7	0.74	0.83	0.87	53.7
37	50	200M	118.65	7	2.6	2.8	0.2063	12/26	245	74	2960	91	92	92.5	0.71	0.8	0.86	67.1
55	75	225S/M	177.67	7.5	2.4	3.2	0.37671	13/29	410	82	2965	92	93	93.3	0.77	0.85	0.88	96.7
75	100	250S/M	236.9	8.3	2.6	3	0.50228	10/22	477.7	82	2965	93	93.6	93.6	0.81	0.87	0.9	129
110	150	280S/M	354.15	7.7	2.4	3	1.41204	21/46	748.9	83	2975	93	94.2	94.5	0.78	0.85	0.88	191
132	175	280S/M	413.17	7.5	2.4	3	1.64738	18/40	811.8	83	2975	93.6	94.7	94.8	0.8	0.87	0.89	226
200	270	315S/M	636.4	7.9	2.2	2.9	2.16513	49/108	1010.4	84	2980	95.2	95.8	96.1	0.79	0.84	0.87	345

Notes:
**Class "F" insulation with ΔT105K*
Standard voltage, connection and frequency: 220-240V Δ 50Hz
380-415V Y 50Hz
380-415V Δ 50Hz
660-690V Y 50Hz
The values shown are subject to change without prior notice. To obtain guaranteed values please access our website.

W21 - Cast Iron Frame Motors - Improved Efficiency EFF2

Output		380 V								415 V							
		Rated speed (rpm)	% of full load						Full load current I_n (A)	Rated speed (rpm)	% of full load						Full load current I_n (A)
			Efficiency η			Power Factor (Cos φ)					Efficiency η			Power Factor (Cos φ)			
kW	HP		50	75	100	50	75	100			50	75	100	50	75	100	
II Pole - 3000 rpm																	
0.12	0.16	2690	48	55	58.8	0.59	0.74	0.84	0.369	2735	43	51	53.5	0.52	0.64	0.75	0.416
0.18	0.25	2700	52.5	57.5	59.5	0.6	0.75	0.85	0.541	2750	47.8	54.5	58	0.52	0.64	0.76	0.568
0.25	0.33	2685	54	59	60	0.56	0.71	0.81	0.782	2740	50	55.5	59.9	0.47	0.6	0.72	0.806
0.37	0.5	2700	62.8	66.5	67	0.66	0.81	0.89	0.943	2750	60	65.5	67	0.55	0.7	0.81	0.948
0.55	0.75	2670	68.5	70	69	0.71	0.83	0.9	1.35	2730	65	69	70.1	0.6	0.73	0.84	1.3
0.75	1	2740	69	73	72.5	0.67	0.79	0.86	1.83	2790	63	70.5	72.5	0.51	0.67	0.78	1.85
1.1	1.5	2745	75.5	76.5	76.5	0.68	0.81	0.87	2.51	2790	72	75.5	76.3	0.54	0.7	0.8	2.51
1.5	2	2820	78	80.1	78.9	0.7	0.81	0.87	3.32	2855	75	78.9	79.3	0.57	0.71	0.8	3.29
2.2	3	2790	78.5	80.2	80.8	0.7	0.82	0.88	4.701	2820	77.5	79.8	81.5	0.57	0.72	0.82	4.58
3	4	2855	82.4	83	83	0.75	0.85	0.89	6.17	2880	80.5	82.4	83.5	0.64	0.77	0.84	5.95
4	5.5	2860	83	84.2	84.5	0.77	0.86	0.89	8.08	2885	80.8	83.4	84.8	0.66	0.78	0.85	7.72
5.5	7.5	2895	84.4	86	86	0.77	0.85	0.89	10.9	2915	82.7	85.5	86.5	0.66	0.78	0.84	10.5
7.5	10	2890	86.8	87.5	87	0.78	0.86	0.89	14.7	2910	85	87	87.5	0.66	0.78	0.84	14.2
9.2	12.5	2900	87.4	88.5	88.4	0.76	0.85	0.89	17.8	2915	85.3	88	88.4	0.63	0.76	0.83	17.4
11	15	2915	87.5	88.5	88.5	0.76	0.84	0.87	21.7	2935	85	87.5	88	0.67	0.78	0.84	20.7
15	20	2925	88.5	90	90	0.74	0.83	0.87	29.1	2940	87.5	89.2	89.7	0.64	0.76	0.83	28
18.5	25	2930	89.5	90.5	90.5	0.74	0.83	0.87	35.7	2940	88	90	90.5	0.63	0.75	0.82	34.7
22	30	2935	91.5	92	91.5	0.78	0.85	0.88	41.5	2950	90.5	91.5	92	0.7	0.8	0.85	39.1
30	40	2955	91	92	92.2	0.76	0.84	0.87	56.8	2965	90	91.5	92	0.64	0.76	0.82	55.3
37	50	2950	91	92	92.5	0.76	0.84	0.87	69.9	2960	89	91	92	0.66	0.77	0.83	67.4
45	60	2955	91.4	92.3	92.5	0.79	0.86	0.89	83	2965	91	92.4	92.7	0.76	0.84	0.87	77.6
55	75	2960	92	92.9	93.2	0.79	0.86	0.89	101	2965	91.7	93	93.3	0.73	0.83	0.86	95.4
75	100	2980	91.8	93.4	93.9	0.79	0.86	0.89	136	2980	91.4	93.3	93.8	0.74	0.83	0.87	128
90	125	2975	92.4	93.6	94.1	0.8	0.87	0.89	163	2980	92	93.5	94.2	0.75	0.83	0.87	153
110	150	2975	93.1	94.2	94.4	0.81	0.86	0.89	199	2980	92.9	94.1	94.5	0.76	0.84	0.87	186
132	175	2975	93.8	94.6	94.7	0.83	0.88	0.9	235	2980	93.6	94.7	94.8	0.79	0.86	0.88	220
160	220	2970	94.5	95	95	0.84	0.89	0.9	284	2975	94.3	95	95.1	0.81	0.87	0.89	263
200	270	2970	92.2	93.4	93.6	0.74	0.83	0.86	377	2975	91.9	93.4	93.7	0.7	0.81	0.84	354
200	270	2980	93.7	95	95.3	0.9	0.92	0.92	347	2985	93.3	94.9	95.4	0.88	0.9	0.91	321
250	340	2970	93.2	94	94.3	0.77	0.84	0.87	463	2975	92.9	94	94.4	0.73	0.82	0.85	433
250	340	2980	94.5	95.8	96	0.9	0.92	0.93	425	2985	94.3	95.8	96.1	0.87	0.91	0.92	393
315	430	2970	94	94.5	94.4	0.8	0.87	0.89	570	2975	93.7	94.6	94.6	0.77	0.85	0.87	532
HIGH-OUTPUT DESIGN																	
0.37	0.5	2710	69.5	71.7	71	0.62	0.75	0.83	0.954	2765	65	70	71	0.52	0.66	0.76	0.954
0.75	1	2790	71	74	74	0.7	0.8	0.87	1.77	2830	67	71.5	73.5	0.6	0.71	0.8	1.77
1.5	2	2750	78	78.5	76.5	0.75	0.85	0.89	3.35	2790	76	78.5	78.5	0.65	0.78	0.85	3.13
2.2	3	2790	78.5	80.2	80.8	0.7	0.82	0.88	4.701	2820	77.5	79.8	81.5	0.57	0.72	0.82	4.58
3	4	2800	82	82.5	81.5	0.61	0.74	0.81	6.9	2845	80	81.5	81.5	0.5	0.64	0.74	6.92
4	5.5	2850	81.5	82.5	82	0.77	0.84	0.88	8.42	2890	80.3	82	82.5	0.68	0.78	0.84	8.03
5.5	7.5	2860	87	87.5	87.2	0.83	0.89	0.91	10.5	2880	86	87.5	87.7	0.77	0.85	0.89	9.8
7.5	10	2850	86.5	87	87	0.66	0.79	0.85	15.4	2885	85	87	87	0.53	0.67	0.76	15.8
11	15	2910	88.5	89.5	89	0.76	0.84	0.88	21.3	2930	87.5	89	89.5	0.66	0.77	0.83	20.6
22	30	2925	90.5	90.7	90.5	0.77	0.85	0.88	42	2935	89.5	90.5	90.7	0.68	0.79	0.84	40.2
30	40	2940	92	92.3	92.3	0.78	0.84	0.88	56.1	2950	92	92.7	92.7	0.71	0.8	0.85	53
37	50	2950	91	92	92.5	0.76	0.84	0.87	69.9	2960	89	91	92	0.66	0.77	0.83	67.4
55	75	2960	92	92.9	93.2	0.79	0.86	0.89	101	2965	91.7	93	93.3	0.73	0.83	0.86	95.4
75	100	2960	93.1	93.4	93.4	0.84	0.89	0.91	134	2970	92.7	93.5	93.6	0.77	0.85	0.89	125
110	150	2975	93.1	94.2	94.4	0.81	0.86	0.89	199	2980	92.9	94.1	94.5	0.76	0.84	0.87	186
132	175	2975	93.8	94.6	94.7	0.83	0.88	0.9	235	2980	93.6	94.7	94.8	0.79	0.86	0.88	220
200	270	2975	95.5	96	96.2	0.81	0.86	0.89	355	2980	95	95.6	96	0.73	0.82	0.86	337

W21 - Cast Iron Frame Motors - Improved Efficiency EFF2

Output		IEC Frame	Full load torque C_n (Nm)	Locked rotor current I_l/I_n	Locked rotor torque T_l/T_n	Break-down torque T_b/T_n	Inertia J kgm²	Allowable locked rotor time Hot/Cold (s)	Weight (kg)	Sound dB (A)	Rated speed (rpm)	400 V						Full load current I_n (A)
												% of full load						
												Efficiency η			Power Factor (Cos φ)			
kW	HP											50	75	100	50	75	100	
IV Pole - 1500 rpm																		
0.12	0.16	63	0.82	3.5	2	2.2	0.00034	30/66	6.6	44	1375	45	54	57	0.49	0.61	0.72	0.422
0.18	0.25	63	1.29	3.4	2	2.2	0.00039	23/51	6.9	44	1360	46	54	58	0.49	0.63	0.74	0.605
0.25	0.33	71	1.77	3.5	1.9	2.1	0.00039	21/46	8.7	43	1310	50	55	59	0.5	0.65	0.76	0.805
0.55	0.75	80	3.74	4.7	2.1	2.2	0.0019	17/37	12.7	44	1410	58.5	66.3	68	0.54	0.7	0.82	1.424
0.75	1	80	5.04	5	2.3	2.2	0.00225	14/31	13.6	44	1395	64.5	71	72	0.55	0.7	0.81	1.856
1.1	1.5	90S	7.42	5.6	2.3	2.4	0.00392	8/18	18.7	49	1420	70	76	77	0.55	0.69	0.79	2.61
1.5	2	90L	9.96	5.5	2.3	2.4	0.00476	8/18	20.1	49	1410	76.5	78.5	79	0.58	0.73	0.82	3.342
2.2	3	100L	14.94	5.6	2.4	2.6	0.00651	9/20	25.8	53	1410	80.5	81.5	81.5	0.6	0.74	0.82	4.751
3	4	100L	20.07	6	2.8	3	0.00842	8/18	29.4	53	1400	80	81	82.6	0.57	0.72	0.81	6.472
4	5.5	112M	26.83	6.2	2.1	2.5	0.01473	13/29	41.6	56	1440	83.5	84.6	85	0.65	0.77	0.83	8.18
5.5	7.5	132S	36.33	6.5	2.1	2.5	0.03489	11/24	54.5	60	1450	84.5	85.6	86	0.63	0.77	0.84	11
7.5	10	132M	48.27	6.7	2.1	2.9	0.04652	8/18	69	60	1455	85	86.5	87	0.63	0.77	0.84	14.8
9.2	12.5	132M	60.34	7.5	2.2	2.8	0.05815	6/13	69.5	60	1455	86.5	87.7	87.7	0.64	0.78	0.85	17.8
11	15	160M	72.41	6	2.3	2.6	0.07528	12/26	95.8	67	1455	86.5	88.5	88.5	0.62	0.74	0.81	22.1
15	20	160L	96.22	5.8	2.3	2.4	0.10539	12/26	123.9	67	1460	88.5	90	89.7	0.68	0.79	0.83	29.1
18.5	25	180M	119.46	7	2.5	3	0.16146	11/24	171.5	64	1470	89.5	90.5	90.5	0.67	0.77	0.84	35.1
22	30	180L	143.84	7	2.7	2.9	0.18837	11/24	173	64	1465	90	91.5	91.2	0.69	0.8	0.85	41
30	40	200M	190.48	6.7	2.5	2.8	0.30338	14/31	233	69	1475	90.3	91.5	92	0.68	0.78	0.84	56
37	50	225S/M	238.1	6.7	2.3	2.8	0.5599	17/37	333.9	70	1475	90.6	91.7	92.2	0.71	0.81	0.86	67.4
45	60	225S/M	285.72	7	2.4	3	0.66488	12/26	379.2	70	1475	91.5	92.4	92.6	0.71	0.8	0.86	81.6
55	75	250S/M	357.15	6.8	2.3	2.7	0.87484	14/31	431.3	70	1475	93	93.3	93.6	0.77	0.85	0.89	95.3
55	75	280S/M	354.75	7.3	2.3	2.8	2.32858	40/88	735	76	1485	91.5	93.5	93.7	0.72	0.81	0.85	99.674
75	100	280S/M	472.99	6.7	2	2.7	1.84681	22/48	719.8	76	1485	92.7	93.8	94.1	0.77	0.84	0.87	132
90	125	280S/M	591.24	7.3	2.4	2.8	2.16799	19/42	701.4	76	1485	93.2	94	94.2	0.77	0.85	0.87	159
90	125	315S/M	591.24	7.1	2.4	2.5	2.56947	31/68	802	77	1485	92.3	93.9	94.2	0.8	0.86	0.88	157
110	150	315S/M	709.49	7.3	2.4	2.8	2.56947	17/37	820.9	77	1485	93.8	94.4	94.4	0.75	0.83	0.86	196
132	175	315S/M	827.74	7.7	2.4	2.8	3.21184	17/37	921.3	77	1485	93.9	94.7	94.8	0.74	0.83	0.86	234
160	220	315S/M	1040.59	7.5	2.5	2.8	3.77391	17/37	995.8	77	1485	94	94.8	95	0.76	0.83	0.86	283
200	270	315B	1277.08	6.8	1.9	2.9	4.0216	33/73	1240	79	1485	93.8	95	95	0.68	0.77	0.81	375
200	270	355M/L	1272.8	6.6	2.3	2.2	6.34151	44/97	1392	79	1490	94.8	95.2	95.4	0.78	0.85	0.87	348
250	340	315B	1613.61	6.2	1.8	2.6	5.1713	29/64	1330	79	1480	94.5	95.2	95.2	0.72	0.8	0.83	457
250	340	355M/L	1602.78	6.9	2.2	2.5	7.57882	36/79	1536.6	79	1490	94.3	95.2	95.8	0.8	0.86	0.88	428
315	430	315B*	2040.75	7.4	2	2.7	5.74514	18/40	1560	79	1480	94.1	95.1	95.2	0.67	0.77	0.82	582
315	430	355M/L	2027.05	6.7	2.2	2.4	9.92464	42/92	1770	79	1490	94.8	95.9	96.2	0.79	0.86	0.88	537
355	482	355M/L*	2272.18	7.9	2.4	2.5	11.6813	28/62	1865	79	1490	95.8	96.3	96.3	0.8	0.87	0.88	605
HIGH-OUTPUT DESIGN																		
0.25	0.33	63	1.64	5	3.1	3.1	0.00067	17/37	8.3	44	1415	52	60	62	0.44	0.54	0.65	0.895
0.37	0.5	71	2.66	3.7	2	2	0.00056	17/37	9.8	43	1320	55	60	62	0.5	0.63	0.76	1.133
0.55	0.75	71	3.8	5	2.8	2.9	0.00096	19/42	11.8	43	1385	66	70.5	72	0.45	0.58	0.68	1.62
1.1	1.5	80	7.61	5	2.3	2.3	0.00328	10/22	16	44	1385	65	68.5	69	0.55	0.7	0.81	2.84
1.5	2	90S	9.96	5.5	2.3	2.4	0.00476	8/18	20.6	49	1410	76.5	78.5	79	0.58	0.73	0.82	3.342
2.2	3	90L	14.94	5.8	2.7	2.5	0.00672	8/18	23.5	49	1410	75	76.5	76.5	0.57	0.71	0.8	5.19
4	5.5	100L*	27.79	6.7	2.6	2.6	0.01072	7/15	34.7	53	1390	81.5	82.2	82	0.64	0.76	0.83	8.483
5.5	7.5	112M*	36.33	6.5	2.5	2.6	0.01875	8/18	46.3	56	1450	84	85.7	85.7	0.54	0.66	0.75	12.4
7.5	10	132S	48.27	6.7	2.1	2.9	0.04652	8/18	62.3	60	1455	85	86.5	87	0.63	0.77	0.84	14.8
11	15	132M/L*	72.41	7.5	2.4	2.7	0.06978	5/11	81.4	60	1455	87	88.4	88	0.7	0.81	0.88	20.5
15	20	160M	96.22	5.8	2.3	2.4	0.10539	12/26	119.3	67	1460	88.5	90	89.7	0.68	0.79	0.83	29.1
18.5	25	160L*	120.69	6	2.4	2.4	0.11542	12/26	130.2	67	1455	88.5	90	90	0.64	0.76	0.82	36.2
22	30	180M	143.84	7	2.7	2.9	0.18837	11/24	197.4	64	1465	90	91.5	91.2	0.69	0.8	0.85	41
30	40	200L	190.48	6.7	2.5	2.8	0.30338	14/31	249.9	69	1475	90.3	91.5	92	0.68	0.78	0.84	56
37	50	200L	238.91	7	2.3	2.5	0.38611	14/31	260	69	1470	91.5	92.5	92.3	0.73	0.82	0.86	67.3
55	75	225S/M	357.15	6.8	2.3	2.7	0.87484	14/31	407.7	70	1475	93	93.3	93.6	0.77	0.85	0.89	95.3
75	100	250S/M	474.59	7.2	2.4	2.6	1.15478	12/26	488	70	1480	92.5	93.6	93.7	0.77	0.85	0.87	133
110	150	280S/M	709.49	7.3	2.4	2.8	2.56947	17/37	755	76	1485	93.8	94.4	94.4	0.75	0.83	0.86	196
132	175	280S/M	827.74	7.7	2.4	2.8	3.21184	17/37	880.6	76	1485	93.9	94.7	94.8	0.74	0.83	0.86	234
200	270	315S/M*	1277.08	7	2.4	2.8	3.77391	10/22	1021.4	77	1485	95	95.4	95.4	0.7	0.8	0.85	356

Notes:
**Class "F" insulation with ΔT105K*
Standard voltage, connection and frequency: 220-240V Δ 50Hz
380-415V Δ 50Hz
380-415V Y 50Hz
660-690V Y 50Hz
The values shown are subject to change without prior notice. To obtain guaranteed values please access our website.

W21 - Cast Iron Frame Motors - Improved Efficiency EFF2

Output		380 V								415 V							
		Rated speed (rpm)	% of full load						Full load current I_n (A)	Rated speed (rpm)	% of full load						Full load current I_n (A)
			Efficiency η			Power Factor (Cos φ)					Efficiency η			Power Factor (Cos φ)			
kW	HP		50	75	100	50	75	100			50	75	100	50	75	100	
IV Pole - 1500 rpm																	
0.12	0.16	1360	47	55	57	0.53	0.65	0.76	0.421	1385	42	51	55	0.45	0.57	0.67	0.457
0.18	0.25	1340	46	54	58	0.54	0.67	0.79	0.597	1370	43	52	56	0.45	0.57	0.68	0.658
0.25	0.33	1280	50	55	56	0.55	0.7	0.8	0.848	1320	43	51	55	0.45	0.58	0.7	0.903
0.55	0.75	1400	61	68	68.2	0.61	0.75	0.86	1.425	1415	58.5	66	67.6	0.51	0.67	0.79	1.433
0.75	1	1380	65	71.5	72	0.61	0.75	0.84	1.884	1405	61	68.4	71	0.5	0.64	0.76	1.934
1.1	1.5	1405	73	76	76.5	0.62	0.75	0.83	2.632	1425	67	75	77	0.49	0.64	0.75	2.65
1.5	2	1400	78.5	79	79	0.65	0.78	0.86	3.354	1415	74.5	78	79	0.52	0.67	0.77	3.431
2.2	3	1400	80.5	81	80.5	0.67	0.79	0.85	4.885	1420	79	81	81.5	0.55	0.68	0.78	4.815
3	4	1390	81.5	82	81.9	0.64	0.77	0.84	6.625	1410	78	81	82.6	0.52	0.67	0.78	6.478
4	5.5	1430	84.3	85	84.5	0.71	0.81	0.86	8.36	1445	82	84	85	0.59	0.72	0.8	8.18
5.5	7.5	1445	85.5	86	85.6	0.7	0.81	0.86	11.4	1455	83.2	85	85.7	0.58	0.72	0.81	11
7.5	10	1450	86.5	86.8	86.8	0.71	0.82	0.87	15.1	1455	83.2	85.7	86.7	0.57	0.72	0.8	15
9.2	12.5	1450	87.3	87.8	87.4	0.7	0.82	0.87	18.4	1455	85.3	87.1	87.5	0.59	0.73	0.82	17.8
11	15	1455	87	88.5	88	0.68	0.79	0.83	22.9	1460	85.5	87.5	88	0.57	0.7	0.78	22.3
15	20	1455	89	89.5	89.3	0.72	0.82	0.85	30	1465	88	90	89.7	0.64	0.75	0.82	28.4
18.5	25	1465	90	90.5	90.2	0.71	0.81	0.85	36.7	1470	88.5	90	90.5	0.62	0.74	0.81	35.1
22	30	1460	90.6	91.3	90.7	0.73	0.82	0.86	42.9	1470	89.5	91	91	0.64	0.76	0.82	41
30	40	1470	91	92	91.6	0.73	0.81	0.85	58.5	1475	89.5	91	91.5	0.63	0.75	0.81	56.3
37	50	1470	91	91.8	92.1	0.75	0.83	0.87	70.2	1475	90	91.5	92	0.67	0.77	0.83	67.4
45	60	1475	92	92.4	92.4	0.74	0.83	0.87	85.1	1480	91	92.3	92.5	0.66	0.77	0.83	81.5
55	75	1470	92.9	93	93.2	0.79	0.86	0.9	99.6	1475	92.7	93	93.5	0.75	0.83	0.87	94.1
55	75	1480	91	93	93.5	0.75	0.84	0.87	102.728	1485	91.5	93.6	93.8	0.7	0.8	0.84	97.112
75	100	1480	92.9	93.6	94	0.8	0.86	0.88	138	1485	92.5	93.8	94	0.75	0.83	0.86	129
90	125	1480	93.3	94	94.2	0.8	0.86	0.88	165	1485	93	94	94.3	0.75	0.83	0.86	154
90	125	1480	92.6	94.1	94.2	0.82	0.87	0.89	163	1485	92	93.9	94.2	0.78	0.85	0.88	151
110	150	1480	93.9	94.2	94.2	0.77	0.85	0.87	204	1485	93.6	94.3	94.4	0.72	0.81	0.85	191
132	175	1485	94.1	94.6	94.7	0.77	0.84	0.87	243	1485	93.8	94.7	94.8	0.71	0.81	0.85	228
160	220	1485	94	94.7	94.8	0.78	0.85	0.87	295	1485	93.7	94.7	94.9	0.73	0.82	0.86	273
200	270	1480	94.2	95.1	95	0.72	0.8	0.82	390	1485	93.4	94.8	95	0.64	0.74	0.8	366
200	270	1485	94.8	95	95.2	0.8	0.86	0.88	363	1490	94.5	95.1	95.3	0.76	0.84	0.86	339
250	340	1480	95	95.4	95.2	0.76	0.83	0.85	469	1485	94	95	95.1	0.67	0.77	0.81	452
250	340	1485	94.5	95.2	95.7	0.82	0.87	0.89	446	1490	94.1	95	95.7	0.77	0.85	0.87	418
315	430	1480	94.6	95.3	95.3	0.73	0.81	0.84	598	1485	93.5	94.7	95	0.62	0.73	0.8	577
315	430	1485	95	95.8	96.1	0.83	0.87	0.89	560	1490	94.5	95.8	96.2	0.76	0.84	0.87	524
355	482	1490	95.9	96.2	96.2	0.82	0.88	0.89	630	1490	95.7	96.3	96.3	0.78	0.86	0.88	583
HIGH-OUTPUT DESIGN																	
0.25	0.33	1405	54	61	63	0.49	0.6	0.7	0.861	1420	49	58	61	0.41	0.51	0.6	0.95
0.37	0.5	1300	57	60	62	0.52	0.67	0.78	1.162	1340	52	57	60	0.44	0.55	0.68	1.262
0.55	0.75	1370	69	72	72.5	0.51	0.63	0.72	1.6	1400	62	68	71	0.42	0.53	0.64	1.68
1.1	1.5	1370	68	69	69.5	0.61	0.76	0.86	2.8	1400	60	66	67	0.5	0.65	0.76	3.01
1.5	2	1400	78.5	79	79	0.65	0.78	0.86	3.354	1415	74.5	78	79	0.52	0.67	0.77	3.431
2.2	3	1390	76	77	76	0.65	0.75	0.83	5.3	1420	73	76	76.5	0.53	0.66	0.76	5.26
4	5.5	1380	82	82	81	0.69	0.8	0.85	8.827	1400	81	82.1	82.5	0.6	0.73	0.81	8.327
5.5	7.5	1445	85	86	85.7	0.6	0.72	0.79	12.3	1455	82	85.7	85.7	0.49	0.62	0.71	12.6
7.5	10	1450	86.5	86.8	86.8	0.71	0.82	0.87	15.1	1455	83.2	85.7	86.7	0.57	0.72	0.8	15
11	15	1450	87.5	88.4	88	0.75	0.84	0.89	21.4	1460	86.5	88.4	88.4	0.67	0.79	0.86	20.1
15	20	1455	89	89.5	89.3	0.72	0.82	0.85	30	1465	88	90	89.7	0.64	0.75	0.82	28.4
18.5	25	1450	89	90	89.4	0.7	0.8	0.84	37.4	1460	88	90	90	0.6	0.73	0.8	35.7
22	30	1460	90.6	91.3	90.7	0.73	0.82	0.86	42.9	1470	89.5	91	91	0.64	0.76	0.82	41
30	40	1470	91	92	91.6	0.73	0.81	0.85	58.5	1475	89.5	91	91.5	0.63	0.75	0.81	56.3
37	50	1465	92	92.5	92	0.77	0.84	0.87	70.2	1475	91	92.5	92.5	0.69	0.8	0.85	65.5
55	75	1470	92.9	93	93.2	0.79	0.86	0.9	99.6	1475	92.7	93	93.5	0.75	0.83	0.87	94.1
75	100	1475	92.6	93.4	93.5	0.8	0.86	0.88	138	1480	92.6	93.7	93.6	0.74	0.84	0.87	128
110	150	1480	93.9	94.2	94.2	0.77	0.85	0.87	204	1485	93.6	94.3	94.4	0.72	0.81	0.85	191
132	175	1485	94.1	94.6	94.7	0.77	0.84	0.87	243	1485	93.8	94.7	94.8	0.71	0.81	0.85	228
200	270	1485	95.1	95.4	95.3	0.74	0.82	0.86	371	1485	94.8	95.3	95.3	0.68	0.78	0.83	352

W21 - Cast Iron Frame Motors - Improved Efficiency EFF2

Output		IEC Frame	Full load torque C_n (Nm)	Locked rotor current I_l/I_n	Locked rotor torque T_l/T_n	Break-down torque T_b/T_n	Inertia J kgm²	Allowable locked rotor time Hot/Cold (s)	Weight (kg)	Sound dB (A)	Rated speed (rpm)	400 V						Full load current I_n (A)
												% of full load						
												Efficiency η			Power Factor (Cos φ)			
kW	HP											50	75	100	50	75	100	
VI Pole - 1000 rpm																		
0.12	0.16	63	1.31	2.6	1.7	1.6	0.00051	46/101	8.1	43	855	40.7	46.7	45.5	0.49	0.6	0.71	0.536
0.18	0.25	71	1.94	3.3	2	2.2	0.00079	50/110	9.6	43	905	46	54	57	0.46	0.55	0.62	0.735
0.25	0.33	71	2.58	3.5	2.2	2.2	0.00096	43/95	11.3	43	900	53	60.5	64	0.4	0.5	0.57	0.989
0.37	0.5	80	3.88	3.6	1.7	1.7	0.0019	16/35	12.6	43	905	55	60	63	0.5	0.64	0.75	1.13
0.55	0.75	80	5.66	4.5	2.3	2.3	0.00311	10/22	14.8	43	930	60	65	67	0.5	0.63	0.73	1.62
0.75	1	90S	7.72	4.2	1.9	2	0.00448	16/35	19.2	45	910	71	73	72.4	0.55	0.69	0.79	1.89
1.1	1.5	90L	11.39	4.8	2.7	2.7	0.00616	9/20	22.4	45	925	72.5	74	72.5	0.47	0.6	0.72	3.042
1.5	2	100L	15.44	4.1	2	2.2	0.00897	17/37	25.8	44	910	74.5	77.5	76	0.51	0.65	0.73	3.902
2.2	3	112M	22.42	5	2.2	2.3	0.01682	14/31	34.5	48	940	77.5	80.5	80.1	0.53	0.66	0.74	5.36
3	4	132S	29.27	5.3	2	2.2	0.03489	20/44	50.7	52	960	80	82.7	82.5	0.58	0.7	0.77	6.82
4	5.5	132M	40.24	5.8	2.3	2.4	0.04458	19/42	57.3	52	960	81.5	83.6	84.2	0.54	0.66	0.74	9.27
5.5	7.5	132M	54.87	6.4	2.7	2.8	0.05814	15/33	66.6	52	960	82.5	84.8	85.8	0.49	0.62	0.71	13
7.5	10	160M	72.79	5.7	2.2	2.5	0.10773	11/24	99.9	56	965	86	87.5	87	0.64	0.76	0.83	15
9.2	12.5	160L	90.98	6	2	2.6	0.12928	10/22	112.6	56	965	86.5	87.5	87	0.63	0.75	0.82	18.6
11	15	160L	109.18	6	2.2	2.6	0.158	11/24	124.5	56	965	87.5	88.5	88	0.65	0.77	0.83	21.7
15	20	180M	144.08	7.5	2.3	2.7	0.26201	7/15	163	56	975	88	89	89	0.76	0.84	0.88	27.6
18.5	25	200L	180.1	6	2.1	2.5	0.34083	11/24	213	58	975	89	90.5	90.2	0.64	0.76	0.82	36.1
22	30	200L	216.12	6	2.3	2.4	0.41258	14/31	234.6	58	975	89	90.9	91.3	0.7	0.79	0.84	41.4
30	40	225S/M	285.24	7.2	2.6	2.7	0.98842	20/44	366.8	61	985	90.5	91.8	91.8	0.77	0.84	0.87	54.2
37	50	250S/M	358.37	7.5	2.7	2.6	1.22377	18/40	428.5	61	980	90.2	92.4	92.5	0.77	0.85	0.87	66.4
45	60	280S/M	427.86	6.8	2.4	2.6	2.06842	24/53	598.3	66	985	90.5	92.3	92.6	0.68	0.78	0.83	84.5
55	75	280S/M	534.82	6.5	2.3	2.5	2.41316	23/51	614.3	66	985	91.6	93.2	93.5	0.71	0.82	0.85	100
75	100	315S/M	713.09	6.7	2.3	2.5	3.21755	20/44	788.4	69	985	91.6	93.5	93.7	0.71	0.81	0.85	136
90	125	315S/M	891.37	6.3	2.1	2.3	3.67719	18/40	800.1	69	985	92.5	94	93.9	0.71	0.81	0.85	163
110	150	315S/M	1069.64	6.4	2.3	2.4	4.82632	18/40	945.3	69	985	93.4	94.4	94.5	0.71	0.8	0.84	200
132	175	315S/M*	1247.91	6.3	2.1	2.2	5.28596	13/29	987.2	69	985	93.5	94.7	94.7	0.72	0.81	0.85	237
160	220	315B	1560.88	7	1.9	2.5	7.10328	25/55	1350	69	990	93.5	94.9	94.9	0.68	0.78	0.82	297
160	220	355M/L	1560.88	6.2	1.9	2.1	9.53128	72/158	1485	73	990	93	95	95.3	0.67	0.77	0.82	295
200	270	315B	1915.63	6.6	2	2.6	8.6038	19/42	1419	69	990	94.8	95.2	95	0.71	0.8	0.84	362
200	270	355M/L	1915.63	6.3	2.1	2.3	12.39067	87/187	1700	73	990	93.5	94.5	94.8	0.7	0.78	0.81	376
250	340	315B*	2412.27	6.8	2.2	2.7	10.707	16/35	1682	69	990	95.1	95.5	95.2	0.73	0.82	0.85	446
250	340	355M/L	2400.15	6.1	2.2	2.2	14.77349	64/141	1830	73	995	94	95.1	95.6	0.7	0.79	0.82	460
280	380	315B*	2696.07	7.4	2.2	2.7	11.472	12/26	1800	69	990	95	95.4	95.4	0.7	0.8	0.84	504
280	380	355M/L	2696.07	6	2.1	2.2	14.77349	54/119	1830	73	990	94.3	95.2	95.4	0.68	0.77	0.8	530
315	430	355M/L*	3050.81	6	1.9	1.9	15.48834	38/84	1950	73	990	94.3	95.8	95.9	0.69	0.78	0.81	585
HIGH-OUTPUT DESIGN																		
3	4	112M	29.27	6.3	2.6	2.6	0.02617	10/22	45.8	48	960	78.5	81.7	84	0.53	0.65	0.73	7.06
4	5.5	132S	40.24	5.8	2.3	2.4	0.04458	19/42	59.4	52	960	81.5	83.6	84.2	0.54	0.66	0.74	9.27
15	20	180L	144.08	7.5	2.3	2.7	0.26201	7/15	161.3	56	975	88	89	89	0.76	0.84	0.88	27.6
18.5	25	200M	180.1	6	2.1	2.5	0.34083	11/24	213	58	975	89	90.5	90.2	0.64	0.76	0.82	36.1
37	50	225S/M	358.37	7.5	2.7	2.6	1.22377	18/40	440	61	980	90.2	92.4	92.5	0.77	0.85	0.87	66.4
45	60	250S/M	430.04	8	2.8	2.8	1.55324	18/40	482.7	61	980	91	92.3	92.6	0.76	0.84	0.87	79.7
75	100	280S/M	713.09	6.7	2.3	2.5	3.21755	20/44	725.9	66	985	91.6	93.5	93.7	0.71	0.81	0.85	136

Notes:
**Class "F" insulation with ΔT105K*
Standard voltage, connection and frequency: 220-240V Δ 50Hz 380-415V Δ 50Hz
380-415V Y 50Hz 660-690V Y 50Hz
The values shown are subject to change without prior notice. To obtain guaranteed values please access our website.

W21 - Cast Iron Frame Motors - Improved Efficiency EFF2

Output		380 V								415 V							
		Rated speed (rpm)	% of full load						Full load current I_n (A)	Rated speed (rpm)	% of full load						Full load current I_n (A)
			Efficiency η			Power Factor (Cos φ)					Efficiency η			Power Factor (Cos φ)			
kW	HP		50	75	100	50	75	100			50	75	100	50	75	100	
VI Pole - 1000 rpm																	
0.12	0.16	845	46.2	50.6	47.6	0.52	0.64	0.76	0.504	860	36.2	42.8	43.2	0.48	0.57	0.67	0.577
0.18	0.25	895	49	55.5	57.5	0.49	0.59	0.65	0.732	910	43	52	56.5	0.44	0.52	0.59	0.751
0.25	0.33	890	56	63	65.3	0.44	0.55	0.61	0.954	905	50	58	62.5	0.37	0.46	0.54	1.03
0.37	0.5	890	57	62	65	0.54	0.69	0.8	1.08	910	55	60	62	0.47	0.6	0.72	1.15
0.55	0.75	920	62	65.8	68	0.54	0.67	0.77	1.6	935	58	64	66	0.47	0.59	0.68	1.7
0.75	1	895	70	72	72	0.61	0.75	0.83	1.91	915	70	71	71	0.52	0.66	0.76	1.93
1.1	1.5	915	73.2	76.4	75.6	0.52	0.67	0.77	2.871	930	71.3	71.4	72.5	0.42	0.55	0.67	3.15
1.5	2	900	73.6	78.5	79	0.57	0.7	0.77	3.747	920	74.2	75.9	74.2	0.46	0.6	0.69	4.076
2.2	3	930	79	80.8	79.7	0.58	0.7	0.76	5.52	950	76	80.3	80.5	0.5	0.63	0.72	5.28
3	4	955	81	83	82	0.61	0.72	0.79	7.04	965	79	82.5	82.6	0.53	0.66	0.74	6.83
4	5.5	960	82.7	84.2	84	0.58	0.73	0.78	9.28	965	80	82.9	83.9	0.52	0.64	0.72	9.21
5.5	7.5	960	84.2	85.5	85.7	0.56	0.69	0.75	13	965	81	83.7	85.4	0.45	0.57	0.66	13.6
7.5	10	960	86	86.5	86	0.69	0.8	0.85	15.6	965	85	86.5	86.5	0.61	0.73	0.8	15.1
9.2	12.5	960	87	87	86.5	0.68	0.79	0.84	19.2	970	86	87.5	87	0.59	0.72	0.8	18.4
11	15	960	88	88	87.5	0.7	0.8	0.85	22.5	970	87	88.6	88.2	0.61	0.74	0.81	21.4
15	20	970	88	88.5	88.5	0.8	0.86	0.89	28.9	975	88	89	89	0.73	0.82	0.87	27
18.5	25	975	89.5	90	90	0.69	0.8	0.84	37.2	980	88	90	90	0.6	0.73	0.8	35.7
22	30	970	89.6	91	91.2	0.74	0.82	0.85	43.1	980	88.4	90.7	91.3	0.66	0.76	0.82	40.9
30	40	980	91	91.8	91.6	0.8	0.86	0.88	56.5	985	90	91.8	92.2	0.73	0.81	0.86	52.6
37	50	980	90.5	92.5	92.4	0.8	0.86	0.88	69.1	985	89.5	92.4	92.6	0.73	0.82	0.86	64.6
45	60	985	91	92.3	92.6	0.72	0.81	0.85	86.9	990	90	92.3	92.7	0.64	0.76	0.82	82.4
55	75	985	92	93.2	93.4	0.74	0.84	0.87	103	990	91.2	93.2	93.6	0.68	0.8	0.84	97.3
75	100	985	92	93.5	93.5	0.74	0.82	0.86	142	990	91.2	93.5	93.8	0.69	0.8	0.84	132
90	125	985	92.8	93.9	93.6	0.74	0.83	0.86	170	990	92.2	93.9	93.9	0.69	0.79	0.84	159
110	150	985	93.6	94.3	94.3	0.74	0.82	0.85	208	985	93.2	94.5	94.6	0.69	0.79	0.83	195
132	175	980	93.7	94.5	94.4	0.75	0.83	0.86	247	985	93.3	94.7	94.7	0.7	0.8	0.84	231
160	220	990	94	94.9	94.7	0.72	0.81	0.84	306	990	93	94.9	94.9	0.64	0.75	0.8	293
160	220	990	93.5	95.2	95.2	0.73	0.8	0.84	304	990	92.5	94.9	95.4	0.63	0.74	0.8	292
200	270	990	95.1	95.3	94.9	0.75	0.82	0.85	377	990	94.4	95.1	95	0.67	0.78	0.83	353
200	270	990	94	94.7	94.8	0.74	0.81	0.83	386	990	93	94.3	94.8	0.66	0.75	0.79	372
250	340	990	95.4	95.6	95.1	0.77	0.84	0.87	459	990	94.8	95.4	95.2	0.7	0.8	0.83	440
250	340	995	94.3	95.2	95.5	0.74	0.81	0.83	479	995	93.7	95	95.8	0.67	0.77	0.81	448
280	380	985	95.4	95.6	95.2	0.75	0.83	0.86	520	990	94.6	95.2	95.3	0.66	0.77	0.82	498
280	380	985	94.7	95.3	95.4	0.73	0.8	0.81	551	990	93.9	95.1	95.3	0.64	0.74	0.79	517
315	430	985	94.8	96	95.8	0.73	0.8	0.82	609	990	93.8	95.6	95.8	0.65	0.76	0.8	572
HIGH-OUTPUT DESIGN																	
3	4	955	80	82	83.9	0.59	0.7	0.76	7.15	965	76.5	81.4	84	0.48	0.6	0.69	7.2
4	5.5	960	82.7	84.2	84	0.58	0.73	0.78	9.28	965	80	82.9	83.9	0.52	0.64	0.72	9.21
15	20	970	88	88.5	88.5	0.8	0.86	0.89	28.9	975	88	89	89	0.73	0.82	0.87	27
18.5	25	975	89.5	90	90	0.69	0.8	0.84	37.2	980	88	90	90	0.6	0.73	0.8	35.7
37	50	980	90.5	92.5	92.4	0.8	0.86	0.88	69.1	985	89.5	92.4	92.6	0.73	0.82	0.86	64.6
45	60	980	91.5	92.3	92.5	0.79	0.86	0.88	83	985	90.5	92.3	92.7	0.73	0.82	0.86	77.6
75	100	985	92	93.5	93.5	0.74	0.82	0.86	142	990	91.2	93.5	93.8	0.69	0.8	0.84	132

W21 - Cast Iron Frame Motors - Improved Efficiency EFF2

Output		IEC Frame	Full load torque C_n (Nm)	Locked rotor current I_l/I_n	Locked rotor torque T_l/T_n	Break-down torque T_b/T_n	Inertia J kgm²	Allowable locked rotor time Hot/Cold (s)	Weight (kg)	Sound dB (A)	Rated speed (rpm)	400 V						Full load current I_n (A)
												% of full load						
												Efficiency η			Power Factor (Cos φ)			
kW	HP											50	75	100	50	75	100	
VIII Pole - 750 rpm																		
0.12	0.16	71	1.7	2.2	2.1	2	0.00079	84/185	10.7	41	660	36.3	43.4	45.6	0.37	0.45	0.53	0.717
0.18	0.25	80	2.53	2.8	2.2	2.4	0.00208	29/64	12.9	42	695	36.2	44.1	48.6	0.45	0.53	0.62	0.862
0.25	0.33	80	3.31	3.5	2.3	2.2	0.00277	24/53	14.5	42	700	46.1	53.6	56.6	0.42	0.52	0.61	1.045
0.37	0.5	90S	5.13	3	1.9	1.8	0.00392	32/70	18.2	43	685	50.6	56.5	57.4	0.44	0.55	0.64	1.454
0.55	0.75	90L	7.8	3.3	1.9	2	0.00561	25/55	21.3	43	675	58	60	60	0.43	0.56	0.66	2.005
0.75	1	100L	9.96	3.5	1.8	2.4	0.00785	33/73	24.2	50	705	62	67.2	67.8	0.42	0.53	0.62	2.575
1.1	1.5	100L	15.05	4	1.7	2.3	0.01177	27/59	30.2	50	700	69.3	72.3	71.2	0.45	0.57	0.66	3.379
1.5	2	112M	20.07	4.2	2.2	2.2	0.01776	26/57	44.4	46	700	73.7	75.4	73.5	0.48	0.61	0.7	4.208
2.2	3	132S	29.68	6.1	2.5	2.8	0.06023	22/48	67.6	48	710	75.8	78	77.1	0.55	0.68	0.77	5.349
3	4	132M	39.57	6.1	2.2	2.6	0.07277	18/40	75.3	48	710	78.5	80.1	79	0.55	0.68	0.76	7.212
4	5.5	160M	53.29	4.7	2.2	2.4	0.10055	18/40	96.6	51	725	80	82	82	0.5	0.63	0.72	9.78
5.5	7.5	160M	72.66	4.8	2.2	2.3	0.12209	18/40	105.7	51	725	81	83	83.5	0.48	0.62	0.71	13.4
7.5	10	160L	96.88	4.7	2.2	2.3	0.15082	16/35	121.2	51	725	83	85	85.5	0.5	0.64	0.73	17.3
9.2	12.5	180M	120.27	6.7	2.2	2.9	0.23443	11/24	163	51	730	83	86	85.9	0.64	0.75	0.81	19.1
11	15	180L	145.32	6.8	2.3	2.5	0.2758	11/24	164.9	51	725	87	88.5	88.3	0.68	0.79	0.84	21.4
15	20	200L	192.44	4.6	2	2.1	0.3767	23/51	228.7	53	730	86.5	88.6	89	0.56	0.68	0.75	32.4
18.5	25	225S/M	240.55	6.9	2.1	2.8	0.84722	17/37	338.7	56	730	88.5	90.1	90	0.72	0.8	0.85	34.9
22	30	225S/M	288.66	7.5	2.2	2.7	0.98842	19/42	363.9	56	730	89	91	91	0.73	0.82	0.85	41.1
30	40	250S/M	384.87	7.9	2.3	2.9	1.22377	17/37	425.2	56	730	89.5	91.2	91.6	0.7	0.79	0.84	56.3
37	50	280S/M	474.59	6.5	1.9	2.3	2.06842	29/64	595.5	59	740	90.5	92.2	92.3	0.67	0.77	0.81	71.4
45	60	280S/M	569.51	6.5	2	2.4	2.52807	26/57	635.4	59	740	90.5	92.1	92.3	0.65	0.75	0.8	88
55	75	315S/M	711.89	6.5	1.9	2.2	3.10263	27/59	731.9	62	740	91.2	93.1	93	0.69	0.78	0.82	104
75	100	315S/M	949.18	6.6	1.9	2.2	4.36666	20/44	872	62	740	92	93.4	93.5	0.67	0.79	0.82	141
90	125	315S/M	1186.48	6.8	2.1	2.4	5.28597	23/51	1020.9	62	740	92.5	93.8	94.2	0.7	0.78	0.83	166
110	150	355M/L	1423.78	6.4	1.5	2.2	11.9324	41/90	1390	70	740	92.5	94.1	94.5	0.63	0.74	0.8	210
132	175	315B	1661.07	6.9	1.9	2.6	7.765	20/44	1399	62	740	94	94.5	94.4	0.63	0.74	0.79	255
132	175	355M/L	1661.07	6.5	1.6	2.2	13.18845	47/103	1445	70	740	93	94.5	94.8	0.63	0.73	0.79	254
160	220	315B	2088.2	7.3	2.1	2.8	9.75	18/40	1534	62	740	93.1	94.7	94.7	0.6	0.72	0.77	317
160	220	355M/L	2088.2	6.6	1.6	2.2	16.32856	42/92	1620	70	740	93.3	94.7	94.7	0.64	0.75	0.8	305
200	270	315B*	2562.8	6.5	1.6	2.3	11.472	18/40	1750	62	740	94.4	94.8	94.4	0.7	0.79	0.82	373
200	270	355M/L	2562.8	6.8	1.6	2.1	19.46866	37/81	1830	70	740	93.3	94.6	95.2	0.6	0.72	0.79	384
HIGH-OUTPUT DESIGN																		
7.5	10	160M	96.88	4.7	2.2	2.3	0.15082	16/35	123	51	725	83	85	85.5	0.5	0.64	0.73	17.3
30	40	225S/M	384.87	7.9	2.3	2.9	1.22377	17/37	440	56	730	89.5	91.2	91.6	0.7	0.79	0.84	56.3
37	50	250S/M	481.09	8.2	2.3	2.8	1.55324	13/29	477.3	56	730	89	91.5	91.5	0.68	0.78	0.84	69.5
45	60	250S/M*	577.31	8.3	2.5	3.4	1.69445	8/18	530	56	730	90	91	91.5	0.67	0.78	0.83	85.5
55	75	280S/M	711.89	6.5	1.9	2.2	3.10263	27/59	680.4	59	740	91.2	93.1	93	0.69	0.78	0.82	104
110	150	315S/M*	1423.78	7	1.9	2.2	5.6307	14/31	1031.9	62	740	92.5	94.1	94.8	0.61	0.73	0.79	212

Notes:
**Class "F" insulation with ΔT105K*
Standard voltage, connection and frequency: 220-240V Δ 50Hz *380-415V Δ 50Hz*
380-415V Y 50Hz *660-690V Y 50Hz*
The values shown are subject to change without prior notice. To obtain guaranteed values please access our website.

W21 - Cast Iron Frame Motors - Improved Efficiency EFF2

Output		380 V								415 V							
		Rated speed (rpm)	% of full load						Full load current I_n (A)	Rated speed (rpm)	% of full load						Full load current I_n (A)
			Efficiency η			Power Factor (Cos φ)					Efficiency η			Power Factor (Cos φ)			
kW	HP		50	75	100	50	75	100			50	75	100	50	75	100	
VIII Pole - 750 rpm																	
0.12	0.16	650	41	47.1	47.6	0.39	0.48	0.57	0.672	670	32.7	40.3	43.2	0.36	0.43	0.5	0.773
0.18	0.25	690	40.7	47.7	50.6	0.47	0.57	0.66	0.819	700	32.8	41.2	46.1	0.43	0.51	0.59	0.921
0.25	0.33	690	49	55.6	57.2	0.45	0.56	0.65	1.022	700	43.1	51.7	55.6	0.4	0.5	0.58	1.079
0.37	0.5	680	54.4	59	58.3	0.48	0.6	0.69	1.397	690	46.6	53.8	56.1	0.41	0.51	0.61	1.504
0.55	0.75	665	61.7	62	60	0.47	0.6	0.7	1.99	680	54.8	59	59	0.41	0.52	0.62	2.092
0.75	1	695	65.6	69	68	0.46	0.58	0.66	2.539	710	58.3	64.6	66.7	0.39	0.49	0.58	2.697
1.1	1.5	690	72.1	73.6	70.8	0.5	0.62	0.7	3.372	705	66.2	70.7	70.7	0.41	0.53	0.62	3.491
1.5	2	690	75.9	76.2	73.2	0.52	0.65	0.73	4.265	705	71.6	74.2	73.1	0.44	0.57	0.66	4.325
2.2	3	705	77.1	78.3	76.7	0.6	0.73	0.8	5.447	715	74.7	77.5	77.1	0.52	0.65	0.74	5.364
3	4	705	79.7	80.5	78.6	0.6	0.73	0.8	7.249	715	77.1	79.6	79	0.51	0.64	0.73	7.237
4	5.5	720	81	83	82	0.54	0.67	0.75	9.88	725	78.5	82	82.5	0.46	0.6	0.69	9.78
5.5	7.5	720	82	84	83	0.54	0.67	0.74	13.6	725	80	82.5	83	0.45	0.58	0.68	13.6
7.5	10	715	84	85	85	0.56	0.69	0.76	17.6	725	81	84	85.5	0.47	0.6	0.7	17.4
9.2	12.5	725	84	86.1	85.5	0.69	0.79	0.84	19.5	730	82	85.9	85.9	0.59	0.72	0.79	18.9
11	15	720	87.5	88.3	87.8	0.71	0.81	0.85	22.4	730	86.5	88.6	88.5	0.65	0.77	0.83	20.8
15	20	725	87.5	88.9	88.9	0.61	0.72	0.77	33.3	730	85.5	88.3	88.9	0.5	0.64	0.72	32.6
18.5	25	730	88.8	90	89.8	0.75	0.83	0.86	36.4	735	88.2	90.3	90.2	0.68	0.78	0.84	34
22	30	730	89.4	90.9	90.5	0.76	0.84	0.86	42.9	735	88.6	91	91.2	0.71	0.8	0.84	40
30	40	730	90	91.3	91.3	0.73	0.81	0.85	58.7	735	89	91.1	91.8	0.66	0.77	0.83	54.8
37	50	735	91	92.2	92.1	0.7	0.79	0.82	74.4	740	90	92.2	92.4	0.64	0.75	0.79	70.5
45	60	735	91	92.2	92	0.7	0.77	0.82	90.6	740	90	92	92.3	0.6	0.72	0.78	87
55	75	735	91.6	93.2	92.8	0.72	0.8	0.83	108	740	90.7	93	93	0.65	0.76	0.8	103
75	100	735	92.4	93.3	93.3	0.7	0.8	0.83	147	740	91.6	93.4	93.4	0.64	0.78	0.81	138
90	125	735	92.9	93.9	94	0.73	0.81	0.84	173	740	92.1	93.7	94.2	0.67	0.75	0.81	164
110	150	740	93	94.2	94.5	0.66	0.77	0.82	216	745	92	94.1	94.5	0.6	0.71	0.78	208
132	175	740	94.6	94.8	94.3	0.68	0.77	0.81	263	745	93.4	94.2	94.4	0.59	0.71	0.77	253
132	175	740	93.5	94.6	94.8	0.66	0.75	0.81	261	745	92.5	94.4	94.8	0.6	0.71	0.77	252
160	220	740	93.6	94.9	94.6	0.66	0.75	0.79	325	745	92.5	94.7	94.7	0.56	0.68	0.75	313
160	220	740	93.8	94.8	94.8	0.68	0.77	0.81	317	745	92.8	94.7	94.7	0.6	0.72	0.79	298
200	270	735	94.3	94.7	94.7	0.73	0.81	0.83	387	740	94.1	94.7	94.3	0.67	0.77	0.8	369
200	270	740	93.8	94.8	95.1	0.65	0.75	0.81	394	745	92.8	94.4	95.2	0.56	0.69	0.77	380
HIGH-OUTPUT DESIGN																	
7.5	10	715	84	85	85	0.56	0.69	0.76	17.6	725	81	84	85.5	0.47	0.6	0.7	17.4
30	40	730	90	91.3	91.3	0.73	0.81	0.85	58.7	735	89	91.1	91.8	0.66	0.77	0.83	54.8
37	50	730	89.5	91.5	91	0.72	0.82	0.86	71.8	735	88.5	91.5	91.5	0.64	0.76	0.82	68.6
45	60	730	90.5	91	91.2	0.69	0.8	0.85	88.2	735	89.5	91	91.6	0.65	0.76	0.82	83.3
55	75	735	91.6	93.2	92.8	0.72	0.8	0.83	108	740	90.7	93	93	0.65	0.76	0.8	103
110	150	735	93	94.1	94.8	0.66	0.75	0.8	220	740	92	94.1	94.8	0.56	0.71	0.77	210

W21 - Cast Iron Frame Motors Premium Efficiency EFF1

Standard Features:

- Three-phase, multivoltage, IP55, TEFC
- Output: 0.12 up to 315kW
- Frames: 63 up to 355M/L
- Voltage: 220-240/380-415V (up to 100L)
  380-415/660V (from 112M and up)
- Class “F” insulation (ΔT=80K)
- Continuous duty: S1
- Design N
- Ambient temperature: 40°C, at 1000 m.a.s.l.
- Squirrel cage rotor/Aluminium die cast
- V’Ring on both endshields
- Stainless steel nameplate AISI 316
- Dimensions according to IEC-72
- Performance characteristics according to IEC 34
- Regreasing nipple from frame 225S/M and above
- Metric threaded cable entries on the terminal box
- Thermistors (1 per phase) fitted in frame 160M and above
- Suitable for inverter duty applications
- Color: RAL 5009

Options Available:

- Degree of Protection: IP56, IP65 or IP66
- Bearing seals:
  - Lip seal
  - Oil seal
  - Labyrinth taconite seal and W3seal for frames 90S and above
- Thermal protection:
  - Thermistors: frame 132M and below
  - Thermostats
  - RTD-PT 100
- Space heaters
- Design H
- Class “H” insulation
- Roller bearings for frame 160M and above

More options available, on request

Typical Applications:

- Pumps
- Fans
- Crushers
- Conveyor belts
- Mills
- Centrifugal machines
- Presses
- Elevators
- Packaging equipment
- Grinders and others.

Bearings
WEG motors are fitted with the highest quality bearings selected from the best manufacturers in the world and designed to ensure long life of the motor even under heavy operating conditions.

Fan cover
Made of steel plate for frames 63 up to 132M and of cast iron for frames 160M and above. It provides higher mechanical strength, corrosion resistance and extended lifetime.

Fan
WEG has designed the fan and fan cover having in mind the lowest noise level. The efficient cooling ensures low motor temperature rise and minimizes winding losses, thus increasing motor efficiency. The W21 line is supplied with anti-static polypropylene fans from 63 up to 315S/M frames and aluminium for 355M/L frame. Alternatively, cast iron or aluminium fans can be supplied on request for all frames.

Frame
WEG motors are made of FC-200 high-grade cast iron (same density as flameproof motors). The frames are provided with fins aimed at improving the heat dissipation and adequately spaced to minimize air blockage due to accumulation of dirt. The motors can be mounted in horizontal or vertical positions.

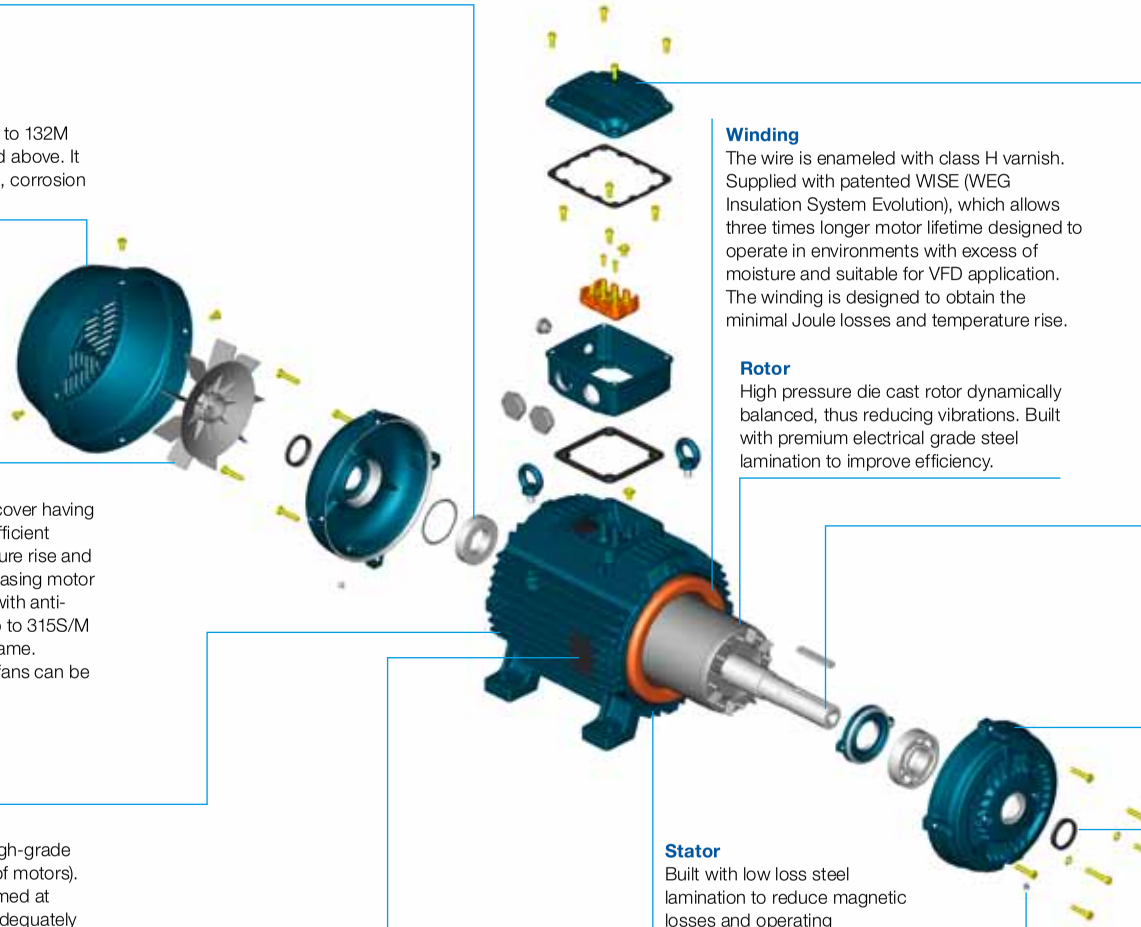

Terminal Box
Made of cast iron with plenty of internal space, the teminal box can be rotated at 90º intervals, having one or two threaded holes to connect power supply cables.
* Available as top or side mounted.

Winding
The wire is enameled with class H varnish. Supplied with patented WISE (WEG Insulation System Evolution), which allows three times longer motor lifetime designed to operate in environments with excess of moisture and suitable for VFD application. The winding is designed to obtain the minimal Joule losses and temperature rise.

Rotor
High pressure die cast rotor dynamically balanced, thus reducing vibrations. Built with premium electrical grade steel lamination to improve efficiency.

Shaft
WEG uses SAE/AISI 1040/45 carbon steel as standard, which provides high mechanical strength, avoiding bending under load and minimizes fatigue which extends lifetime performance. Specially designed to withstand torques caused during motor acceleration and deceleration (brake). Upon special design motor can have a second shaft end.

Endshields
Made of cast iron, they are provided with external fins for better heat dissipation, thus increasing bearing life time.

Stator
Built with low loss steel lamination to reduce magnetic losses and operating temperature.

Seals
WEG motors are fitted with either V-ring seals, Oil seals or Lip seals and may also be fitted with Labyrinth Taconite seals or W3Seal to ensure the best possible protection under dusty and high moisture environments.

Nameplate
Stainless steel nameplate ensuring a permanent record of all motor data.

Drain Hole
Provided with plastic drain plug allowing drainage of condensed water.

W21 - Cast Iron Frame Motors - Premium Efficiency EFF1

Output		IEC Frame	Full load torque C_n (Nm)	Locked rotor current I_l/I_n	Locked rotor torque T_l/T_n	Break-down torque T_b/T_n	Inertia J kgm²	Allowable locked rotor time Hot/Cold (s)	Weight (kg)	Sound dB (A)	Rated speed (rpm)	400 V						Full load current I_n (A)
												% of full load						
												Efficiency η			Power Factor (Cos φ)			
kW	HP											50	75	100	50	75	100	
II Pole - 3000 rpm																		
0.12	0.16	63	0.41	5	2.8	3	0.00012	25/55	6.8	52	2760	58	64.8	65.5	0.51	0.64	0.74	0.357
0.18	0.25	63	0.64	4.4	2.5	2.5	0.00012	30/66	6.9	52	2730	63.5	68.5	69.5	0.62	0.76	0.81	0.462
0.25	0.33	63	0.85	4.5	2.5	2.5	0.00016	18/40	7.3	52	2730	64	68.5	71.2	0.58	0.71	0.8	0.634
0.37	0.5	71	1.25	5.5	3	3.2	0.00037	23/51	10	56	2810	69	73.8	74.5	0.63	0.77	0.85	0.843
0.55	0.75	71	1.89	5.7	2.7	2.7	0.00045	16/35	10.6	56	2790	72.5	76.6	76.7	0.68	0.8	0.86	1.2
0.75	1	80	2.51	6.8	3.1	3.1	0.00079	20/44	13.8	59	2795	76.5	80.5	80.5	0.73	0.82	0.86	1.56
1.1	1.5	80	3.74	7.8	3.4	3.4	0.00096	15/33	14.9	59	2820	81	83	83.6	0.64	0.76	0.84	2.26
1.5	2	90S	4.91	7.3	2.8	2.8	0.00205	14/31	19.4	62	2860	83.2	84.9	84.5	0.68	0.8	0.85	3.01
2.2	3	90L	7.35	8.4	3.7	3.5	0.00266	9/20	21.8	62	2865	84	86	86.6	0.64	0.76	0.83	4.42
3	4	100L	9.7	8.9	3	3.1	0.00672	12/26	31.4	67	2895	84.5	87	88.3	0.73	0.83	0.87	5.64
4	5.5	112M	13.32	8.2	2.7	3.4	0.00842	17/37	42.7	64	2900	87	88.4	88.6	0.72	0.83	0.87	7.49
5.5	7.5	132S	17.95	8	2.7	3.2	0.02056	19/42	60.9	67	2935	88.5	90	90.1	0.71	0.81	0.86	10.2
7.5	10	132S	24.01	8	2.5	2.9	0.0243	13/29	66	67	2925	88.5	90.6	90.8	0.72	0.82	0.87	13.7
11	15	160M	35.72	8.5	2.8	3.3	0.05295	14/31	114.7	70	2950	90	91.9	92.3	0.7	0.8	0.85	20.2
15	20	160M	47.7	8.2	2.4	3.3	0.05883	12/26	120.5	70	2945	91	92	92.5	0.74	0.82	0.86	27.2
18.5	25	160L	59.63	8.8	2.5	3.2	0.06766	10/22	133.7	70	2945	91.9	92.8	93.1	0.73	0.82	0.85	33.7
22	30	180M	71.43	8.6	2.7	3.3	0.11919	14/31	189.4	70	2950	92.5	93.5	93.7	0.76	0.84	0.87	39
30	40	200L	94.92	7.4	2.7	2.8	0.2063	31/68	246.7	74	2960	92.8	93.7	94	0.77	0.84	0.87	52.9
37	50	200L	118.65	7.6	2.7	2.7	0.22424	25/55	257.9	74	2960	93.2	94	94.6	0.76	0.84	0.87	64.9
45	60	225S/M	141.9	8.5	2.4	2.9	0.44846	18/40	409.8	82	2970	93.6	94.5	94.7	0.82	0.88	0.9	76.2
55	75	250S/M	177.67	8.9	2.6	3.4	0.50227	15/33	455.4	82	2965	94	95	95	0.85	0.89	0.91	91.8
75	100	280S/M	236.1	7.7	2.2	2.9	1.27083	51/112	740	83	2975	93.2	94.4	95.6	0.83	0.87	0.89	127
90	125	280S/M	295.12	8.2	2.2	2.8	1.41204	42/92	688.8	83	2975	94.1	95.5	95.8	0.82	0.88	0.9	151
110	150	315S/M	354.15	8	2.3	2.8	1.50617	38/84	834.3	83	2975	94.4	95.3	95.8	0.82	0.87	0.89	186
132	175	315S/M	413.17	7.8	2.2	2.7	1.74151	32/70	871	83	2975	94.3	95.5	96	0.82	0.88	0.89	223
150	200	315S/M	472.99	7.9	2.2	2.7	2.11806	31/68	1010	83	2970	95	95.8	96.2	0.84	0.89	0.9	250
160	220	315S/M	520.29	7.8	2.2	2.5	2.11806	33/73	1000.7	83	2970	95	96	96.2	0.85	0.89	0.9	267
185	250	315S/M	590.25	8.2	2.4	2.8	2.11806	28/62	1010	83	2975	95	95.9	96.2	0.8	0.86	0.88	315
200	270	355M/L	635.33	7.2	1.8	2.6	4.82631	70/154	1490	81	2985	93.5	95	95.4	0.89	0.91	0.92	329
220	300	355M/L	705.93	8.5	2.2	3	5.17105	65/143	1650	81	2985	95.2	96.1	96.4	0.85	0.9	0.92	358
250	340	355M/L	800.05	7.8	1.7	2.5	5.74561	65/143	1750	81	2985	95.5	96.3	96.4	0.87	0.91	0.92	407
HIGH-OUTPUT DESIGN																		
5.5	7.5	112M	18.36	7.7	2.5	3	0.00995	10/22	45	64	2870	87.5	88.5	88.6	0.78	0.86	0.89	10.1
9.2	12.5	132M	29.91	8.5	2.8	3.1	0.02804	11/24	73.8	67	2935	88.5	90.9	91	0.7	0.81	0.87	16.8
75	100	250S/M	236.9	8.5	3	3.4	0.55609	10/22	490	82	2965	93	94.3	94.6	0.83	0.88	0.9	127
110	150	280S/M	354.15	8	2.3	2.8	1.50617	38/84	830	83	2975	94.4	95.3	95.8	0.82	0.87	0.89	186
200	270	315S/M	636.4	7.9	2.2	2.9	2.16513	49/108	1010.4	83	2980	95.6	96.2	96.4	0.77	0.84	0.87	344

Notes:
**Class "F" insulation with ΔT105K*
Standard voltage, connection and frequency: 220-240V Δ 50Hz *380-415V Δ 50Hz*
380-415V Y 50Hz *660-690V Y 50Hz*
The values shown are subject to change without prior notice. To obtain guaranteed values please access our website.

W21 - Cast Iron Frame Motors - Premium Efficiency EFF1

Output		380 V								415 V							
		Rated speed (rpm)	% of full load						Full load current I_n (A)	Rated speed (rpm)	% of full load						Full load current I_n (A)
			Efficiency η			Power Factor (Cos φ)					Efficiency η			Power Factor (Cos φ)			
kW	HP		50	75	100	50	75	100			50	75	100	50	75	100	
II Pole - 3000 rpm																	
0.12	0.16	2730	60	66	67	0.56	0.69	0.79	0.344	2790	55	63	63	0.48	0.61	0.71	0.373
0.18	0.25	2700	65	69	69	0.66	0.79	0.83	0.478	2760	62	68	70	0.58	0.73	0.78	0.459
0.25	0.33	2700	65.5	69.5	70	0.62	0.75	0.83	0.654	2755	62.5	67.5	71.9	0.55	0.68	0.77	0.628
0.37	0.5	2790	70.5	73.8	74.3	0.68	0.8	0.88	0.86	2825	67.5	73.8	74.5	0.6	0.74	0.82	0.843
0.55	0.75	2760	73.5	76.7	76.5	0.73	0.82	0.88	1.24	2810	71.5	76.5	76.7	0.64	0.77	0.84	1.19
0.75	1	2770	77	80.5	79.8	0.76	0.85	0.88	1.62	2805	76	80.5	80.5	0.7	0.79	0.84	1.54
1.1	1.5	2800	82	83.2	82.8	0.69	0.8	0.86	2.35	2835	80	82.5	83.5	0.58	0.72	0.81	2.26
1.5	2	2845	83.6	84.8	84.3	0.73	0.83	0.87	3.11	2870	82.8	84.8	84.6	0.64	0.77	0.83	2.97
2.2	3	2855	84.5	86	86	0.69	0.8	0.86	4.52	2875	83.5	86	86.6	0.58	0.72	0.8	4.42
3	4	2890	85	86.7	87.5	0.77	0.85	0.88	5.92	2900	84	86.7	88	0.69	0.81	0.86	5.51
4	5.5	2890	87.5	88.3	88.3	0.77	0.85	0.89	7.73	2910	86.5	88.3	88.5	0.68	0.81	0.86	7.31
5.5	7.5	2930	89	90.3	90.2	0.75	0.83	0.87	10.6	2940	88	89.8	90	0.68	0.78	0.84	10.1
7.5	10	2920	89	90.5	90.6	0.75	0.84	0.88	14.3	2930	88	90.6	90.9	0.7	0.8	0.86	13.3
11	15	2945	90.5	92	92.2	0.74	0.83	0.87	20.8	2955	89.5	91.8	92.2	0.66	0.77	0.83	20
15	20	2940	91.5	92	92.4	0.78	0.85	0.87	28.4	2950	90.5	91.9	92.4	0.7	0.8	0.85	26.6
18.5	25	2940	92.1	92.8	93	0.76	0.84	0.87	34.7	2950	91.7	92.7	93	0.7	0.8	0.83	33.3
22	30	2945	92.8	93.5	93.5	0.79	0.86	0.89	40.2	2955	92.2	93.5	93.7	0.73	0.82	0.85	38.4
30	40	2955	93	93.7	93.8	0.81	0.86	0.88	55.2	2965	92.6	93.7	94.1	0.74	0.82	0.86	51.6
37	50	2955	93.4	94	94.4	0.8	0.86	0.88	67.7	2965	93	94	94.6	0.72	0.82	0.86	63.3
45	60	2965	93.9	94.5	94.5	0.84	0.89	0.91	79.5	2970	93.3	94.5	94.6	0.8	0.87	0.89	74.4
55	75	2960	94.2	94.7	94.7	0.87	0.9	0.92	95.9	2970	93.8	95	95	0.83	0.88	0.9	89.5
75	100	2970	93.4	94.4	95.4	0.85	0.88	0.9	133	2975	93	94.4	95.5	0.81	0.86	0.88	124
90	125	2975	94.3	95.5	95.8	0.84	0.89	0.9	159	2980	93.9	95.5	95.8	0.8	0.87	0.89	147
110	150	2970	94.6	95.4	95.7	0.84	0.88	0.9	194	2975	94.2	95.2	95.8	0.8	0.86	0.88	182
132	175	2970	94.5	95.5	96	0.84	0.89	0.9	232	2975	94.1	95.4	96	0.8	0.87	0.89	215
150	200	2970	95	95.8	96.1	0.86	0.9	0.91	261	2975	95	95.8	96.2	0.82	0.88	0.9	241
160	220	2965	95	95.9	96.1	0.86	0.9	0.91	278	2975	94.9	96	96.2	0.83	0.88	0.89	260
185	250	2970	95.2	95.9	96.2	0.82	0.89	0.89	328	2975	94.8	95.8	96.2	0.78	0.84	0.87	308
200	270	2980	93.7	95	95.3	0.9	0.92	0.92	347	2985	93.3	94.9	95.4	0.88	0.9	0.91	321
220	300	2985	95.5	96.2	96.4	0.87	0.91	0.92	377	2990	95	96	96.3	0.83	0.89	0.91	349
250	340	2980	95.5	96.3	96.4	0.89	0.92	0.93	424	2985	95.4	96.3	96.4	0.86	0.91	0.92	392
HIGH-OUTPUT DESIGN																	
5.5	7.5	2860	87.7	88.3	88	0.82	0.88	0.9	10.6	2880	87.3	88.5	88.6	0.75	0.84	0.88	9.81
9.2	12.5	2930	89	91	91	0.76	0.85	0.89	17.3	2940	88	90.8	91	0.66	0.77	0.85	16.5
75	100	2960	93.2	94.3	94.3	0.85	0.89	0.91	133	2965	92.8	94.3	94.6	0.81	0.87	0.9	123
110	150	2970	94.6	95.4	95.7	0.84	0.88	0.9	194	2975	94.2	95.2	95.8	0.8	0.86	0.88	182
200	270	2975	95.9	96.2	96.3	0.8	0.86	0.89	355	2980	95.5	96.3	96.5	0.7	0.82	0.86	335

W21 - Cast Iron Frame Motors - Premium Efficiency EFF1

Output		IEC Frame	Full load torque C_n (Nm)	Locked rotor current I_l/I_n	Locked rotor torque T_l/T_n	Break-down torque T_b/T_n	Inertia J kgm²	Allowable locked rotor time Hot/Cold (s)	Weight (kg)	Sound dB (A)	Rated speed (rpm)	400 V						Full load current I_n (A)
												% of full load						
												Efficiency η			Power Factor (Cos φ)			
kW	HP											50	75	100	50	75	100	
IV Pole - 1500 rpm																		
0.12	0.16	63	0.79	4.5	2.6	2.7	0.00045	20/44	7.3	44	1415	56.5	62.5	64.5	0.43	0.55	0.65	0.413
0.18	0.25	63	1.25	4.6	2.6	2.7	0.00056	27/59	7.8	44	1400	58	64	67.5	0.44	0.55	0.66	0.583
0.25	0.33	71	1.66	5	3	3.1	0.00079	48/106	11.1	43	1400	69	73	75	0.5	0.61	0.69	0.697
0.37	0.5	71	2.52	5	2.7	2.8	0.00079	37/81	11.1	43	1395	69	74	75.5	0.47	0.59	0.69	1.03
0.55	0.75	80	3.68	6	2.6	2.8	0.00242	17/37	14	44	1430	72	77	78	0.56	0.69	0.78	1.3
0.75	1	80	4.95	6	2.6	2.6	0.00328	16/35	15.9	44	1420	76	78.6	80.1	0.62	0.75	0.82	1.65
1.1	1.5	90S	7.29	7	2.6	3	0.0056	14/31	21.4	49	1445	80	83.8	83.8	0.59	0.72	0.8	2.37
1.5	2	90L	9.69	7.5	2.8	3.3	0.00672	12/26	23.7	49	1450	80.5	84.6	85.2	0.54	0.68	0.77	3.3
2.2	3	100L	14.79	7.4	3	3	0.01072	17/37	32.2	53	1425	85.3	86.4	86.4	0.65	0.77	0.83	4.43
3	4	100L	19.65	7.8	2.9	3.3	0.01225	12/26	39.4	53	1430	84.5	86.5	87.5	0.64	0.76	0.83	5.96
4	5.5	112M	26.73	6.6	2.1	2.6	0.01875	12/26	46.4	56	1445	87.1	88.3	88.6	0.66	0.77	0.83	7.85
5.5	7.5	132S	35.96	8.5	2.4	3.1	0.05427	12/26	66.9	56	1465	88	89.6	90.1	0.69	0.79	0.85	10.4
7.5	10	132M	47.95	8.2	2.5	3	0.0659	9/20	72.4	56	1465	89	90	90.4	0.71	0.81	0.86	13.9
9.2	12.5	160M	60.14	5.6	2.3	2.3	0.08029	27/59	103.6	67	1460	89.6	91	91	0.7	0.8	0.84	17.4
11	15	160M	71.92	6	2.5	2.6	0.10037	19/42	111.3	67	1465	90.3	91.4	91.2	0.68	0.78	0.83	21
15	20	160L	95.89	6.1	2.5	2.6	0.11542	17/37	130	67	1465	90.5	91.9	91.8	0.66	0.77	0.83	28.4
18.5	25	180M	119.46	8	2.9	2.9	0.19733	12/26	188.8	64	1470	91.6	93	93.4	0.65	0.76	0.82	34.9
22	30	180L	142.86	7.9	2.8	2.9	0.23321	16/35	195.3	64	1475	92.5	93.5	93.7	0.71	0.81	0.86	39.4
30	40	200L	190.48	7	2.5	2.6	0.33095	18/40	243.2	69	1475	93	94	93.9	0.67	0.78	0.83	55.6
37	50	225S/M	237.3	7.2	2.2	2.7	0.69987	16/35	370.4	70	1480	93	94	94.1	0.76	0.84	0.87	65.2
45	60	225S/M	284.76	7.4	2.4	3	0.83984	15/33	400	70	1480	94	94.5	94.5	0.76	0.83	0.88	78.1
55	75	250S/M	357.15	7.2	2.5	2.8	1.15478	17/37	492.2	70	1475	94.1	94.7	94.6	0.77	0.86	0.89	94.3
75	100	280S/M	472.99	7.2	2.2	2.6	2.16799	38/84	660	70	1485	93.9	95.1	95.2	0.79	0.85	0.88	129
90	125	280S/M	591.24	7.8	2.4	2.6	2.81036	25/55	798.7	70	1485	94.3	95.1	95.3	0.79	0.85	0.88	155
110	150	315S/M	709.49	7.6	2.4	2.6	3.21184	29/64	925.2	72	1485	94.5	95.2	95.6	0.8	0.86	0.88	189
132	175	315S/M	827.74	7.8	2.4	2.6	3.77391	25/55	992.6	72	1485	94.8	95.4	95.7	0.78	0.85	0.88	226
150	200	315S/M	945.99	7.5	2.4	2.7	3.77391	20/44	1005	72	1485	94.5	95.7	95.8	0.78	0.84	0.87	260
160	220	315S/M	1040.59	7.6	2.4	2.6	3.77391	20/44	1044.2	72	1485	94.7	95.7	95.9	0.76	0.84	0.87	277
200	270	355M/L	1272.8	6.6	2.1	2.3	6.85703	49/108	1525	79	1490	95.3	95.8	96	0.8	0.86	0.88	342
250	340	355M/L	1602.78	6.9	2.2	2.5	8.12016	36/79	1607.9	79	1490	95.3	96.3	96.5	0.8	0.86	0.88	425
315	430	355M/L	2027.05	7	2.2	2.4	9.92464	42/92	1797.1	79	1490	95.9	96.3	96.6	0.79	0.86	0.88	535
HIGH-OUTPUT DESIGN																		
2.2	3	90L	14.84	5.8	2.7	2.5	0.00672	8/18	24	49	1420	76.5	79	81	0.55	0.69	0.78	5.026
7.5	10	132S	47.95	8.2	2.5	3	0.05815	9/20	80	56	1465	88.5	90	90.2	0.7	0.81	0.86	14
9.2	12.5	132M	59.93	8	2.5	3	0.06202	7/15	74	56	1465	88	89.5	90.4	0.68	0.8	0.85	17.281
75	100	250S/M	474.59	7.5	2.7	3.2	1.25976	16/35	530	70	1480	94	94.7	94.7	0.74	0.84	0.87	131
110	150	280S/M	709.49	7.6	2.4	2.6	3.21184	29/64	855.5	70	1485	94.5	95.2	95.6	0.8	0.86	0.88	189
200	270	315S/M*	1277.08	8	2.4	2.6	3.9345	17/37	1043.3	72	1485	95.2	95.8	95.8	0.76	0.84	0.87	346

Notes:
**Class "F" insulation with ΔT105K*
Standard voltage, connection and frequency: 220-240V Δ 50Hz *380-415V Δ 50Hz*
380-415V Y 50Hz *660-690V Y 50Hz*
The values shown are subject to change without prior notice. To obtain guaranteed values please access our website.

W21 - Cast Iron Frame Motors - Premium Efficiency EFF1

Output		380 V								415 V							
		Rated speed (rpm)	% of full load						Full load current I_n (A)	Rated speed (rpm)	% of full load						Full load current I_n (A)
			Efficiency η			Power Factor (Cos φ)					Efficiency η			Power Factor (Cos φ)			
kW	HP		50	75	100	50	75	100			50	75	100	50	75	100	
IV Pole - 1500 rpm																	
0.12	0.16	1405	59	64	65	0.46	0.59	0.69	0.407	1425	54	60.5	63	0.4	0.51	0.61	0.434
0.18	0.25	1390	60	65	67	0.47	0.57	0.68	0.6	1410	56	63	67	0.41	0.53	0.64	0.584
0.25	0.33	1385	70	73.5	74.5	0.54	0.65	0.73	0.698	1415	68	72.5	75.5	0.46	0.58	0.66	0.698
0.37	0.5	1385	71	74.5	75.5	0.51	0.63	0.72	1.03	1405	67	73.5	75	0.43	0.55	0.66	1.04
0.55	0.75	1420	73	77.5	77.5	0.59	0.72	0.81	1.33	1435	71	76.5	78	0.53	0.65	0.75	1.31
0.75	1	1410	77	78.7	79.6	0.66	0.78	0.85	1.68	1425	75	78.5	80.1	0.58	0.71	0.79	1.65
1.1	1.5	1440	81.5	83.8	83.6	0.64	0.76	0.83	2.41	1450	78.5	83.8	83.8	0.55	0.69	0.77	2.37
1.5	2	1440	81.5	84.7	85	0.59	0.73	0.8	3.35	1455	79.5	84.5	85	0.5	0.64	0.74	3.32
2.2	3	1420	85.5	86.3	86.2	0.7	0.81	0.86	4.51	1430	85	86.4	86.4	0.62	0.75	0.81	4.37
3	4	1425	85	86.5	87.5	0.68	0.8	0.85	6.13	1435	84	86.5	87.5	0.6	0.73	0.81	5.89
4	5.5	1440	87.5	88.4	88.3	0.7	0.8	0.86	8	1450	86.7	88.2	88.6	0.62	0.74	0.81	7.75
5.5	7.5	1460	88.5	89.6	90	0.72	0.81	0.86	10.8	1470	87.5	89.4	90.1	0.65	0.77	0.83	10.2
7.5	10	1460	89.2	89.8	89.8	0.75	0.84	0.88	14.4	1465	88.7	89.8	90.3	0.68	0.79	0.85	13.6
9.2	12.5	1455	90	91	90.7	0.74	0.82	0.85	18.1	1465	89.2	91	91	0.67	0.78	0.83	16.9
11	15	1460	90.6	91.5	91	0.72	0.81	0.85	21.6	1470	90	91.3	91.3	0.64	0.75	0.81	20.7
15	20	1460	90.9	91.9	91.5	0.7	0.8	0.85	29.3	1470	90.1	91.9	91.8	0.62	0.74	0.81	28.1
18.5	25	1465	91.8	93	93.3	0.7	0.8	0.84	35.9	1475	91.3	92.9	93.3	0.6	0.73	0.8	34.5
22	30	1470	92.8	93.4	93.5	0.75	0.83	0.88	40.6	1475	92.2	93.4	93.7	0.68	0.79	0.85	38.4
30	40	1475	93.5	94.1	93.7	0.71	0.81	0.85	57.2	1480	92.5	93.9	93.8	0.63	0.75	0.81	54.9
37	50	1480	93.4	94	94	0.8	0.86	0.88	68	1485	92.6	93.9	94	0.73	0.82	0.86	63.7
45	60	1480	94.2	94.4	94.3	0.79	0.85	0.89	81.5	1485	93.8	94.3	94.5	0.73	0.81	0.87	76.1
55	75	1475	94.2	94.6	94.4	0.8	0.88	0.9	98.4	1480	94	94.7	94.7	0.75	0.85	0.88	91.8
75	100	1480	94.1	95	95	0.81	0.86	0.88	136	1485	93.7	95	95.2	0.77	0.84	0.87	126
90	125	1485	94.5	95.1	95.2	0.81	0.87	0.89	161	1485	94.1	95	95.3	0.77	0.84	0.87	151
110	150	1480	94.7	95.2	95.4	0.82	0.87	0.89	197	1485	94.3	95.1	95.6	0.78	0.85	0.87	184
132	175	1480	95	95.4	95.6	0.8	0.86	0.89	236	1485	94.6	95.3	95.7	0.76	0.84	0.87	221
150	200	1480	94.7	95.7	95.6	0.8	0.86	0.88	271	1485	94.3	95.7	95.8	0.76	0.82	0.86	253
160	220	1480	94.9	95.7	95.8	0.78	0.86	0.88	288	1485	94.5	95.7	95.9	0.74	0.82	0.86	270
200	270	1485	95.3	95.6	95.7	0.83	0.87	0.89	357	1490	95	95.8	96	0.78	0.85	0.87	333
250	340	1485	95.5	96.3	96.4	0.82	0.87	0.89	443	1490	95.1	96.1	96.4	0.77	0.85	0.87	415
315	430	1485	96.1	96.4	96.5	0.81	0.87	0.89	557	1490	95.5	96.2	96.6	0.76	0.84	0.87	521
HIGH-OUTPUT DESIGN																	
2.2	3	1410	77	79.5	80.5	0.58	0.72	0.8	5.19	1430	75	78	80	0.52	0.66	0.76	5.034
7.5	10	1460	89	90	89.8	0.74	0.83	0.87	14.6	1465	88	89.5	90.3	0.65	0.78	0.84	13.8
9.2	12.5	1460	89	89.5	89.5	0.73	0.83	0.87	17.952	1465	87	89	90.3	0.64	0.76	0.83	17.077
75	100	1475	94	94.3	94.5	0.77	0.85	0.88	137	1480	93.5	94.7	94.7	0.73	0.83	0.86	128.11
110	150	1480	94.7	95.2	95.4	0.82	0.87	0.89	197	1485	94.3	95.1	95.6	0.78	0.85	0.87	184
200	270	1480	95.5	95.7	95.7	0.79	0.86	0.88	361	1485	95	95.8	95.8	0.73	0.82	0.86	337

W21 - Cast Iron Frame Motors - Premium Efficiency EFF1

Output		IEC Frame	Full load torque C_n (Nm)	Locked rotor current I_l/I_n	Locked rotor torque T_l/T_n	Break-down torque T_b/T_n	Inertia J kgm²	Allowable locked rotor time Hot/Cold (s)	Weight (kg)	Sound dB (A)	Rated speed (rpm)	400 V						Full load current I_n (A)
												% of full load						
												Efficiency η			Power Factor (Cos φ)			
kW	HP											50	75	100	50	75	100	
VI pole - 1000rpm																		
0.12	0.16	63	1.23	3.5	2.2	2.1	0.001	41/90	8	43	910	44	52	56.3	0.44	0.53	0.63	0.488
0.18	0.25	71	1.95	3.5	2.1	2.2	0.001	49/108	10.8	43	900	49	57	61	0.42	0.51	0.6	0.71
0.25	0.33	71	2.58	3.5	2.1	2.2	0.001	43/95	11.7	43	900	53	63	67	0.39	0.48	0.55	0.979
0.37	0.5	80	3.8	4.7	2.1	2.2	0.002	14/31	13.8	43	925	62	67.5	70	0.48	0.61	0.7	1.09
0.55	0.75	80	5.73	4.8	2.2	2.4	0.003	11/24	15.2	43	920	62	68.5	70.3	0.48	0.63	0.72	1.57
0.75	1	90S	7.63	4.8	2.1	2.2	0.006	20/44	21.6	45	920	74	77.7	77.7	0.5	0.63	0.72	1.94
1.1	1.5	90L	11.45	5	2.3	2.4	0.007	12/26	23.9	45	920	72	77.7	77.7	0.48	0.61	0.71	2.88
1.5	2	100L	14.87	5.5	2.2	2.5	0.013	19/42	30.6	44	945	79	81.5	81.5	0.49	0.6	0.7	3.8
2.2	3	112M	22.18	6.2	2.4	2.6	0.022	16/35	43	48	950	81.5	84	83.8	0.52	0.64	0.72	5.26
3	4	132S	29.27	6	2.1	2.5	0.043	28/62	58.9	52	960	82	85	86.5	0.53	0.67	0.74	6.76
4	5.5	132M	40.24	6.5	2.2	2.5	0.050	21/46	66.1	52	960	85	86.6	87.2	0.56	0.69	0.76	8.71
5.5	7.5	132M	54.59	6.8	2.3	2.5	0.066	17/37	76	52	965	84.5	87.5	87.6	0.53	0.65	0.73	12.4
7.5	10	160M	72.41	6.6	2.5	2.9	0.144	19/42	115.4	56	970	87.5	89.5	90	0.61	0.74	0.81	14.8
11	15	160L	108.62	7	2.4	2.7	0.176	13/29	132.6	56	970	89	90.3	90.3	0.58	0.72	0.79	22.3
15	20	180L	144.82	8	2.7	3	0.290	9/20	171.9	56	970	91.2	91.9	91.6	0.72	0.81	0.87	27.2
18.5	25	200L	180.1	6.3	2.3	2.5	0.377	17/37	226.8	58	975	91.3	92.7	92.9	0.67	0.78	0.82	35.1
22	30	200L	216.12	6.2	2.3	2.6	0.448	15/33	242.5	58	975	91.2	92.6	92.9	0.65	0.75	0.82	41.7
30	40	225S/M	285.24	7	2.6	2.6	0.988	21/46	360.3	61	985	91.7	93	93.5	0.73	0.81	0.85	54.5
37	50	250S/M	358.37	7	2.5	2.6	1.318	20/44	442.9	61	980	91.8	94	94	0.72	0.81	0.84	67.6
45	60	280S/M	427.86	6.8	2.2	2.7	2.298	27/59	604.1	66	985	92	93.6	94.2	0.67	0.77	0.82	84.1
55	75	280S/M	534.82	6.7	2.1	2.6	2.643	21/46	633	66	985	92.5	93.9	94.3	0.67	0.78	0.82	103
75	100	315S/M	713.09	6.7	2.1	2.4	3.447	20/44	725	69	985	93.7	94.4	94.5	0.72	0.81	0.84	136
90	125	315S/M	891.37	6.5	2.2	2.4	4.022	16/35	834	69	985	94	94.8	94.8	0.71	0.8	0.83	165
110	150	315S/M	1069.64	6.5	2.2	2.4	5.286	18/40	995.4	69	985	94.5	95.1	95.1	0.69	0.79	0.84	199
132	175	315S/M	1247.91	6.6	2.2	2.5	5.631	12/26	1050	69	985	94.4	94.8	94.9	0.7	0.79	0.84	239
160	220	355M/L	1560.88	6	1.9	2.1	9.531	76/167	1487.3	73	990	94.2	95.8	96	0.65	0.77	0.81	297
200	270	355M/L	1915.63	6.1	2.2	2.3	12.391	85/187	1714.6	73	990	94.7	95.5	95.7	0.66	0.76	0.81	372
250	340	355M/L	2412.27	6.1	1.9	2.1	14.773	64/141	1885	73	990	95	96	96.2	0.69	0.78	0.81	463
315	430	355M/L*	3050.81	6	1.9	1.9	15.488	38/84	1981	73	990	94.8	96.1	96.3	0.69	0.78	0.81	583
HIGH OUTPUT DESIGN																		
9.2	12.5	160L	90.51	6.2	2.2	2.7	0.165	15/33	130	56	970	89.4	90.1	90.1	0.6	0.73	0.8	18.4
37	50	225S/M	358.37	7	2.5	2.6	1.318	20/44	450	61	980	91.8	94		0.72	0.81	0.84	67.6
45	60	250S/M	430.04	8	2.8	2.8	1.553	18/40	484.2	61	980	92	93.5	93.5	0.76	0.84	0.87	79.8
75	100	280S/M	713.09	6.7	2.1	2.4	3.447	20/44	725	69	985	93.7	94.4	94.5	0.72	0.81	0.84	136

Notes:
**Class "F" insulation with ΔT105K*
Standard voltage, connection and frequency: 220-240V Δ 50Hz *380-415V Δ 50Hz*
380-415V Y 50Hz *660-690V Y 50Hz*
The values shown are subject to change without prior notice. To obtain guaranteed values please access our website.

W21 - Cast Iron Frame Motors - Premium Efficiency EFF1

Output		380 V								415 V							
		Rated speed (rpm)	% of full load						Full load current I_n (A)	Rated speed (rpm)	% of full load						Full load current I_n (A)
			Efficiency η			Power Factor (Cos φ)					Efficiency η			Power Factor (Cos φ)			
kW	HP		50	75	100	50	75	100			50	75	100	50	75	100	
VI pole - 1000rpm																	
0.12	0.16	900	47	54	57	0.47	0.56	0.66	0.485	915	41	50	55	0.41	0.5	0.6	0.506
0.18	0.25	890	51	58	61	0.46	0.55	0.63	0.712	910	47	56	61	0.39	0.47	0.57	0.72
0.25	0.33	890	55	64	67	0.4	0.53	0.59	0.961	910	51	62	67	0.37	0.44	0.53	0.979
0.37	0.5	920	64	68.5	70.5	0.52	0.65	0.74	1.08	930	60	66.5	69.5	0.44	0.57	0.66	1.12
0.55	0.75	910	64	69.5	70.5	0.53	0.67	0.76	1.56	930	60	67.5	70	0.44	0.59	0.66	1.66
0.75	1	910	75	77.5	76.8	0.55	0.67	0.74	2.01	930	73	77.7	77.7	0.46	0.6	0.7	1.92
1.1	1.5	910	73	77.5	76.8	0.53	0.65	0.74	2.94	930	71	77.7	77.7	0.44	0.57	0.67	2.94
1.5	2	940	80	81.5	81.5	0.53	0.64	0.72	3.88	950	78	81.5	81.5	0.45	0.57	0.68	3.77
2.2	3	945	82.5	83.5	83.4	0.55	0.67	0.74	5.42	955	80.5	84	84	0.48	0.61	0.7	5.21
3	4	955	83	85.2	86	0.57	0.69	0.76	6.97	965	81	84.8	86.5	0.5	0.64	0.72	6.7
4	5.5	955	85.7	86.8	87	0.6	0.72	0.78	8.96	965	84.3	86.4	87.2	0.52	0.66	0.74	8.62
5.5	7.5	960	85.5	87.6	87.6	0.58	0.7	0.76	12.6	965	83.5	87.4	87.6	0.48	0.61	0.7	12.5
7.5	10	965	88	89.7	89.9	0.65	0.77	0.82	15.5	975	87	89.3	90	0.58	0.71	0.79	14.7
11	15	970	89.5	90.5	90.2	0.62	0.76	0.81	22.9	975	88.5	90	90.3	0.54	0.68	0.76	22.3
15	20	970	91.4	91.8	91.4	0.75	0.83	0.89	28	975	91	91.8	91.6	0.7	0.8	0.85	26.8
18.5	25	970	91.8	92.6	92.7	0.72	0.81	0.84	36.1	980	90.8	92.6	92.9	0.64	0.75	0.8	34.6
22	30	970	92	92.9	92.9	0.7	0.78	0.84	42.8	980	90.4	92.2	92.9	0.6	0.72	0.8	41.2
30	40	980	92	93	93.4	0.76	0.84	0.86	56.7	985	91.4	93	93.5	0.7	0.79	0.84	53.1
37	50	980	92	94	93.9	0.75	0.83	0.86	69.6	985	91.6	94	94	0.69	0.79	0.82	66.8
45	60	985	92.5	93.7	94.1	0.71	0.79	0.84	86.5	985	91.5	93.5	94.1	0.64	0.75	0.8	83.2
55	75	985	92.8	93.9	94.2	0.71	0.8	0.83	107	985	92.2	93.9	94.2	0.64	0.75	0.81	100
75	100	985	94	94.4	94.4	0.75	0.83	0.85	142	985	93.4	94.4	94.5	0.69	0.79	0.83	133
90	125	985	94.3	94.8	94.7	0.74	0.82	0.84	172	985	93.7	94.8	94.8	0.68	0.78	0.82	161
110	150	985	94.7	95	95	0.73	0.81	0.85	207	985	94.3	95.1	95.2	0.66	0.77	0.83	194
132	175	985	94.6	94.9	94.8	0.73	0.82	0.85	249	985	94.3	94.8	94.9	0.68	0.77	0.83	233
160	220	990	94.5	95.9	96	0.7	0.8	0.82	309	990	93.9	95.8	96	0.6	0.74	0.8	290
200	270	990	95	95.6	95.7	0.7	0.79	0.82	387	990	94.4	95.4	95.7	0.62	0.73	0.79	368
250	340	990	95.3	96	96.1	0.73	0.8	0.82	482	990	94.7	95.9	96.2	0.66	0.76	0.8	452
315	430	985	95	96.2	96.2	0.73	0.8	0.82	607	990	94.3	96	96.3	0.65	0.76	0.8	569
HIGH OUTPUT DESIGN																	
9.2	12.5	970	90	90.3	90	0.64	0.75	0.81	19.2	975	88.7	89.9	90	0.55	0.71	0.79	18
37	50	980	92	94	93.9	0.75	0.83	0.86	69.6	985	91.6	94	94		0.79	0.82	66.8
45	60	980	92.5	93.5	93.4	0.8	0.86	0.88	83.2	985	91.5	93.5	93.5	0.73	0.82	0.86	77.9
75	100	985	94	94.4	94.4	0.75	0.83	0.85	142	985	93.4	94.4	94.5	0.69	0.79	0.83	133

W21 - Cast Iron Frame Motors - Premium Efficiency EFF1

Output		IEC Frame	Full load torque C_n (Nm)	Locked rotor current I_l/I_n	Locked rotor torque T_l/T_n	Break-down torque T_b/T_n	Inertia J kgm²	Allowable locked rotor time Hot/Cold (s)	Weight (kg)	Sound dB (A)	Rated speed (rpm)	400 V						Full load current I_n (A)
												% of full load						
												Efficiency η			Power Factor (Cos φ)			
kW	HP											50	75	100	50	75	100	
VIII Pole - 750 rpm																		
0.12	0.16	71	1.64	2.5	1.9	2.1	0.00079	44/97	11.4	41	685	38	46.2	49	0.38	0.47	0.55	0.643
0.18	0.25	80	2.51	3.1	1.8	2	0.00242	16/35	14.7	42	700	42	51	55.8	0.42	0.52	0.61	0.763
0.25	0.33	80	3.34	3.5	2	2	0.00294	15/33	14.8	42	695	51	60	64.3	0.41	0.52	0.61	0.92
0.37	0.5	90S	5.09	4	2	2	0.00448	21/46	18	43	690	53.5	61.3	64.5	0.39	0.5	0.59	1.4
0.55	0.75	90L	7.63	4	2	2.2	0.00616	21/46	22.5	43	690	59	64	66.3	0.39	0.5	0.6	2
0.75	1	100L	9.89	4.2	1.9	2.2	0.01121	38/84	28.5	50	710	71	74.2	76	0.4	0.53	0.61	2.34
1.1	1.5	100L	15.05	4.2	1.8	2.2	0.01289	31/68	29.2	50	700	71	74.5	77	0.4	0.52	0.62	3.33
1.5	2	112M	19.79	5.4	2.4	2.7	0.0243	32/70	44.4	46	710	79	81.3	82	0.43	0.55	0.66	4
2.2	3	132S	29.68	6.2	2.4	2.5	0.07527	25/55	67.8	48	710	82	84.3	84.2	0.54	0.66	0.73	5.17
3	4	132M	39.57	6	2.4	2.4	0.08531	21/46	73.1	48	710	82.8	84.6	84.5	0.54	0.67	0.75	6.83
4	5.5	160M	53.29	5.2	2.2	2.8	0.12209	27/59	113.1	51	725	83	85.8	86.6	0.44	0.57	0.66	10.1
5.5	7.5	160M	72.16	5.6	2.5	2.8	0.16518	22/48	123.9	51	730	83.5	86.4	87	0.42	0.55	0.65	14
7.5	10	160L	96.88	5.2	2	2.4	0.16518	19/42	133.7	51	725	85.5	88	88.5	0.52	0.64	0.71	17.2
9.2	12.5	180M	121.1	7	2.2	2.7	0.262	12/26	163	51	725	87.5	88.3	88.5	0.67	0.77	0.83	18.1
11	15	180L	145.32	7	2.2	2.4	0.26201	9/20	173.2	51	725	88	89	89	0.68	0.78	0.83	21.5
15	20	200L	192.44	5	2	2.2	0.50227	28/62	262.1	53	730	89.5	90.8	91.5	0.53	0.65	0.71	33.3
18.5	25	225S/M	240.55	7.2	2.1	2.6	0.84722	18/40	340.6	56	730	90.5	91.5	91.9	0.69	0.79	0.83	35
22	30	225S/M	288.66	7.5	2.2	3	0.98842	18/40	364.9	56	730	90.8	92.2	92.5	0.67	0.77	0.82	41.9
30	40	250S/M	384.87	7.5	2.1	2.8	1.22377	17/37	425.2	56	730	91.7	92.5	93	0.69	0.79	0.83	56.1
37	50	280S/M	474.59	6.5	1.9	2.2	2.64298	32/70	636.7	59	740	92.6	93.5	93.9	0.63	0.74	0.8	71.1
45	60	280S/M	569.51	6.5	2	2.4	3.10263	32/70	698	59	740	92.9	93.7	94	0.62	0.73	0.79	87.5
55	75	315S/M	711.89	6.5	2	2.2	3.44737	32/70	788.9	62	740	93.5	94.5	94.5	0.63	0.74	0.8	105
75	100	315S/M	949.18	6.6	1.9	2.2	4.36666	20/44	876	62	740	93.9	94.7	94.9	0.66	0.78	0.81	141
90	125	315S/M	1186.48	6.8	1.9	2.4	5.28596	23/51	982	62	740	93.9	94.7	95	0.67	0.77	0.81	169
110	150	355M/L	1423.78	6.4	1.5	2.2	12.56043	41/90	1430	70	740	93.5	95.2	95.2	0.62	0.73	0.79	211
132	175	355M/L	1661.07	6.5	1.6	2.2	13.18845	47/103	1445	70	740	94	95.4	95.4	0.63	0.73	0.79	253
132	180	355M/L	1708.53	6.5	1.6	2.2	13.18845	47/103	1445	70	740	94	95.4	95.4	0.63	0.73	0.79	253
160	220	355M/L	2088.2	6.6	1.6	2.2	16.32856	42/92	1620	70	740	94.3	95.7	95.7	0.62	0.74	0.79	305
185	250	355M/L	2372.96	6.5	1.6	2.2	17.27059	30/66	1730	70	740	93.5	95.3	95.6	0.58	0.7	0.78	358
200	270	355M/L	2562.8	6.8	1.6	2.1	19.46866	37/81	1830	70	740	94.2	95.1	95.5	0.58	0.71	0.78	388
220	300	355M/L	2847.55	6.8	1.6	2.2	20.4107	35/77	1930	70	740	94.5	95.2	95.6	0.61	0.73	0.77	431
HIGH-OUTPUT DESIGN																		
55	75	280S/M	711.89	6.5	2	2.2	3.44737	32/70	730	62	740	93.5	94.5	94.5	0.63	0.74	0.8	105

Notes:
**Class "F" insulation with ΔT105K*
Standard voltage, connection and frequency: 220-240V Δ 50Hz 380-415V Δ 50Hz
380-415V Y 50Hz 660-690V Y 50Hz
The values shown are subject to change without prior notice. To obtain guaranteed values please access our website.

W21 - Cast Iron Frame Motors - Premium Efficiency EFF1

Output		380 V								415 V							
		Rated speed (rpm)	% of full load						Full load current I_n (A)	Rated speed (rpm)	% of full load						Full load current I_n (A)
			Efficiency η			Power Factor (Cos φ)					Efficiency η			Power Factor (Cos φ)			
kW	HP		50	75	100	50	75	100			50	75	100	50	75	100	
VIII Pole - 750 rpm																	
0.12	0.16	675	42	50	52	0.42	0.5	0.59	0.594	695	34	42	46.5	0.35	0.45	0.52	0.69
0.18	0.25	690	44	53	56	0.44	0.55	0.64	0.763	705	40	49	55.5	0.4	0.49	0.58	0.778
0.25	0.33	685	53	61	63.8	0.43	0.55	0.63	0.945	700	49	59	63.8	0.4	0.5	0.59	0.924
0.37	0.5	680	55	62.5	65	0.42	0.54	0.64	1.35	695	52	60	64	0.37	0.47	0.56	1.44
0.55	0.75	680	61	65	66.5	0.42	0.54	0.64	1.96	700	57	63	66	0.37	0.47	0.57	2.03
0.75	1	700	72	74.4	75.5	0.44	0.56	0.64	2.36	715	70	74	76	0.38	0.5	0.58	2.37
1.1	1.5	690	72.5	75.5	76.9	0.44	0.57	0.65	3.34	710	69.5	73.5	76.9	0.37	0.49	0.59	3.37
1.5	2	700	79.8	81.6	82	0.47	0.59	0.69	4.03	715	78.2	81	81.8	0.4	0.51	0.63	4.05
2.2	3	705	83	84.3	84.2	0.58	0.7	0.75	5.29	715	81	84.3	84.3	0.5	0.63	0.71	5.11
3	4	705	83.2	84.6	84.5	0.58	0.71	0.77	7.01	715	82.5	84.6	84.6	0.51	0.64	0.73	6.76
4	5.5	725	84	86.2	86.6	0.48	0.61	0.7	10	730	82	85.4	86.6	0.41	0.53	0.63	10.2
5.5	7.5	725	84	86.7	87	0.46	0.6	0.69	13.9	730	83	86.1	87	0.4	0.52	0.62	14.2
7.5	10	720	86.5	88.2	88.5	0.56	0.68	0.74	17.4	725	84.5	87.8	88.5	0.48	0.6	0.69	17.1
9.2	12.5	725	87.8	88.3	88	0.71	0.81	0.85	18.7	730	87.2	88.3	88.6	0.63	0.75	0.81	17.8
11	15	725	88.2	89	88.8	0.73	0.81	0.85	22.1	730	87.8	89	89	0.65	0.75	0.81	21.2
15	20	730	90	91	91.2	0.56	0.67	0.73	34.2	735	89	90.6	91.3	0.5	0.63	0.69	33.1
18.5	25	725	90.8	91.5	91.5	0.73	0.81	0.84	36.6	730	90.2	91.5	91.9	0.65	0.77	0.82	34.2
22	30	730	91.1	92.2	92.2	0.71	0.8	0.83	43.7	735	90.5	92.1	92.5	0.63	0.74	0.81	40.8
30	40	725	92	92.5	92.6	0.73	0.81	0.84	58.6	730	91.3	92.5	93	0.65	0.77	0.82	54.7
37	50	735	92.9	93.5	93.8	0.68	0.76	0.81	74	740	92.1	93.4	93.8	0.6	0.72	0.79	69.5
45	60	735	93.3	93.9	94	0.66	0.77	0.81	89.8	740	92.5	93.5	94.1	0.58	0.7	0.77	86.4
55	75	735	93.8	94.5	94.4	0.69	0.78	0.81	109	740	93.1	94.5	94.6	0.61	0.73	0.79	102
75	100	735	94.1	94.7	94.8	0.69	0.8	0.82	147	740	93.7	94.7	94.9	0.63	0.76	0.8	137
90	125	735	94.2	94.8	95	0.71	0.79	0.83	173	740	93.6	94.6	95.1	0.63	0.75	0.8	165
110	150	740	94	95.2	95.1	0.65	0.76	0.81	217	745	93	95.2	95.2	0.59	0.77	0.77	209
132	175	740	94.5	95.4	95.3	0.66	0.75	0.81	260	745	93.5	95.4	95.4	0.6	0.71	0.77	250
132	180	740	94.5	95.4	95.3	0.66	0.75	0.81	260	745	93.5	95.4	95.4	0.6	0.71	0.77	250
160	220	740	94.8	95.7	95.5	0.66	0.76	0.8	318	745	93.8	95.7	95.7	0.58	0.71	0.78	298
185	250	740	94	95.4	95.6	0.63	0.74	0.8	368	745	93	95.2	95.5	0.53	0.66	0.76	355
200	270	740	94.4	95.2	95.4	0.63	0.74	0.8	398	745	94	95	95.5	0.54	0.68	0.76	383
220	300	740	94.8	95.2	95.4	0.64	0.75	0.79	444	745	94.2	95.2	95.6	0.59	0.71	0.76	421
HIGH-OUTPUT DESIGN																	
55	75	735	93.8	94.5	94.4	0.69	0.78	0.81	109	740	93.1	94.5	94.6	0.61	0.73	0.79	102

W21 - Cast Iron Frame Motors
Top Premium Efficiency Exceeds EFF1

Standard Features:

- Three-phase, multivoltage, IP55, TEFC
- Output: 1.15 up to 315kW
- Frames: 112M up to 355M/L
- Voltage: 220-240/380-415V (up to 100L)
  380-415/660V (from 112M and up)
- Class “F” insulation (ΔT=80K)
- Continuous duty: S1
- Design N
- Ambient temperature: 40°C, at 1000 m.a.s.l.
- Squirrel cage rotor/Aluminium die cast
- V’Ring on both endshields
- Stainless steel nameplate AISI 316
- Dimensions according to IEC-72
- Performance characteristics according to IEC 34
- Regreasing nipple from frame 225S/M and above
- Metric threaded cable entries on the terminal box
- Thermistors (1 per phase) fitted in frame 160M and above
- Suitable for inverter duty applications
- Color: RAL 6021

Options Available:

- Degree of Protection: IP56, IP65 or IP66
- Bearing seals:
  - Lip seal
  - Oil seal
  - Labyrinth taconite seal and W3seal for frames 90S and above
- Thermal protection:
  - Thermistors: frame 132M and below
  - Thermostats
  - RTD-PT 100
- Space heaters
- Design H
- Class “H” insulation
- Roller bearings for frame 160M and above

More options available, on request

Typical Applications:

- Pumps
- Fans
- Crushers
- Conveyor belts
- Mills
- Centrifugal machines
- Presses
- Elevators
- Packaging equipment
- Grinders and others.

Bearings
WEG motors are fitted with the highest quality bearings selected among the best manufacturers in the world and designed to ensure long life to the motor even under heavy operating conditions. WEG also uses the Super-premium Polyrex EM polyurea grease that is specially formulated for electric motor bearings. Its advanced thickener formulation and proprietary manufacturing techniques provide low noise characteristics, improved bearing performance and protection.

Fan Cover
Made of steel plate for frames 112M up to 132M and of cast iron for frames 160M and above. It provides higher mechanical strength, corrosion resistance and extended lifetime.

Fan
WEG has designed the fan and fan cover having in mind the lowest noise level. The efficient cooling ensures low motor temperature rise and minimizes winding losses, thus increasing motor efficiency. The W21 line is supplied with anti-static polypropylene fans from 112M up to 315S/M frames and aluminium for 355M/L frame. Alternatively, cast iron or aluminium fans can be supplied on request for all frames.

Frame
WEG motors are made of FC-200 high-grade cast iron (same density as flameproof motors). The frames are provided with fins aimed at improving the heat dissipation and adequately spaced to minimize air blockage due to accumulation of dirt. The motors can be mounted in horizontal or vertical positions.

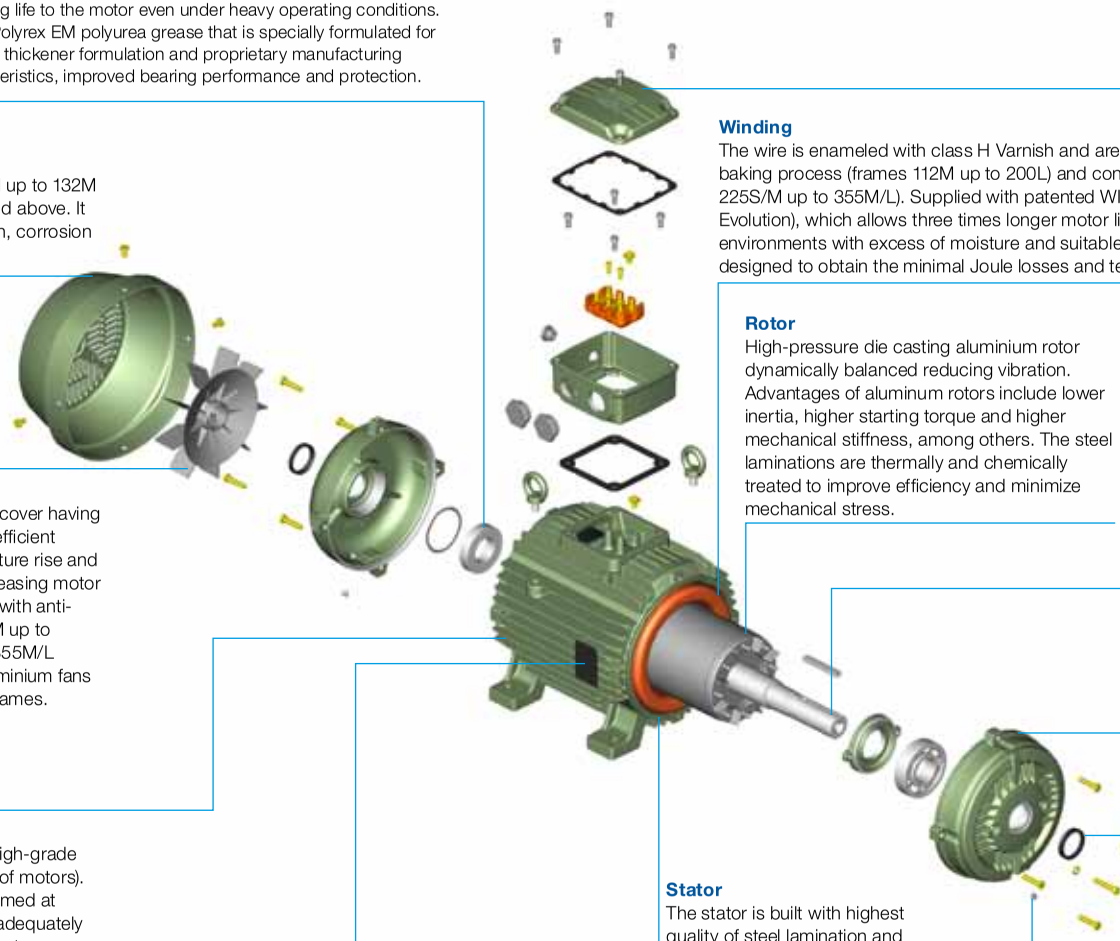

Nameplate
Stainless steel nameplate ensuring a permanent record of all motor data.

Stator
The stator is built with highest quality of steel lamination and it is thermally and chemically treated to reduce electrical losses and operating temperature. Guarantees high efficiency and extended motor lifetime.

Drain Hole
Provided with plastic drain plug allowing drainage of condensed water.

Terminal Box
Made of cast iron with plenty of internal space, the teminal box can be rotated at 90º intervals, having one or two threaded holes to connect power supply cables.
* Available as top or side mounted.

Winding
The wire is enameled with class H Varnish and are impregnated with dipping and baking process (frames 112M up to 200L) and continuous resin flow process (frames 225S/M up to 355M/L). Supplied with patented WISE (WEG Insulation System Evolution), which allows three times longer motor lifetime designed to operate in environments with excess of moisture and suitable for VFD application. The winding is designed to obtain the minimal Joule losses and temperature rise.

Rotor
High-pressure die casting aluminium rotor dynamically balanced reducing vibration. Advantages of aluminum rotors include lower inertia, higher starting torque and higher mechanical stiffness, among others. The steel laminations are thermally and chemically treated to improve efficiency and minimize mechanical stress.

Shaft
WEG uses SAE/AISI 1040/45 carbon steel as standard, which provides high mechanical strength, avoiding bending under load and minimizes fatigue which extends lifetime performance. Specially designed to withstand torques caused during motor acceleration and deceleration (brake). Upon special design motor can have a second shaft end.

Endshields
Made of cast iron, they are provided with external fins for better heat dissipation, thus increasing bearing life time.

Seals
WEG motors are fitted with either V-ring seals, Oil seals or Lip seals and may also be fitted with Labyrinth Taconite seals or W3Seal to ensure the best possible protection under dusty and high moisture environments.

W21 - Cast Iron Frame Motors - Top Premium Efficiency Exceeds EFF1

Output		IEC Frame	Full load torque C_n (Nm)	Locked rotor current I_l/I_n	Locked rotor torque T_l/T_n	Break-down torque T_b/T_n	Inertia J kgm²	Allowable locked rotor time Hot/Cold (s)	Weight (kg)	Sound dB (A)	Rated speed (rpm)	400 V						Full load current I_n (A)
												% of full load						
												Efficiency η			Power Factor (Cos φ)			
kW	HP											50	75	100	50	75	100	
II pole - 3000rpm																		
4	5.5	112M	13.32	8.5	2.6	3.1	0.008	21/46	42.6	64	2900	88.7	89.8	89.8	0.61	0.79	0.85	7.56
5.5	7.5	132S	17.92	8.5	2.5	3	0.021	19/42	65.8	67	2940	90.1	91.2	91.3	0.7	0.8	0.85	10.2
7.5	10	132S	23.89	8.5	2.7	3.1	0.028	8/18	70.9	67	2940	89	91.3	91.6	0.72	0.83	0.87	13.6
9.2	12.5	132M	29.97	8.5	2.4	2.9	0.024	8/18	60	67	2930	91.1	92.1	92.3	0.65	0.78	0.85	16.9
11	15	160M	35.72	8.6	2.3	3	0.053	12/26	113.9	70	2950	91.7	93	93	0.65	0.78	0.83	20.6
15	20	160M	47.7	8.3	2.4	2.9	0.059	11/24	120.6	70	2945	92.2	93.3	93.3	0.71	0.81	0.84	27.6
18.5	25	160L	59.63	9	2.3	2.7	0.068	11/24	131.4	70	2945	92.9	93.8	93.8	0.67	0.79	0.85	33.5
22	30	180M	71.31	8.6	2.8	2.7	0.151	9/20	189.4	70	2955	93.2	94.3	94.1	0.75	0.83	0.87	38.8
30	40	200L	95.08	7.6	2.7	2.4	0.206	35/77	246.8	74	2955	92.6	93.9	94.2	0.75	0.83	0.86	53.5
37	50	200L	118.65	8.4	2.6	2.6	0.224	16/35	251.4	74	2960	93.3	94.2	94.7	0.76	0.84	0.87	64.8
45	60	225S/M	142.14	8.5	2.4	2.9	0.520	20/44	439.4	82	2965	94.5	95.4	95.4	0.82	0.88	0.9	75.6
55	75	250S/M	177.97	8.5	2.3	3	0.556	18/40	479.9	82	2960	94.7	95.5	95.3	0.85	0.89	0.91	91.5
75	100	280S/M	236.1	7	1.6	2.6	1.271	36/79	700	83	2975	95.2	96.1	96	0.83	0.88	0.89	127
90	125	280S/M	295.12	8	2.2	2.8	1.412	42/92	744.4	83	2975	94.3	95.6	96	0.82	0.88	0.9	150
110	150	315S/M	354.15	8	1.8	2.6	1.506	25/55	827.8	83	2975	95.2	96.4	96.4	0.76	0.84	0.88	187
132	175	315S/M	413.17	7.8	1.9	2.6	1.742	30/66	900.5	83	2975	95.5	96.6	96.6	0.79	0.87	0.89	222
160	220	315S/M	519.42	8.2	1.9	2.6	2.118	30/66	1001.2	83	2975	95.5	96.6	96.6	0.79	0.86	0.89	269
IV pole - 1500rpm																		
4	5.5	112M	26.73	6.6	2	2.6	0.019	8/18	46.6	56	1445	87.4	89.9	89.9	0.66	0.77	0.83	7.738
5.5	7.5	132S	35.96	8.5	2.4	3.1	0.054	12/26	67.1	56	1465	88.5	90.1	90.7	0.69	0.79	0.85	10.3
7.5	10	132M	47.95	8	2.5	3	0.066	7/15	100.9	56	1465	89	91.1	91.7	0.71	0.81	0.85	13.9
11	15	160M	71.67	7.5	2.8	3	0.110	12/26	123.8	67	1470	91.1	92.3	92.6	0.62	0.73	0.8	21.4
15	20	160L	95.89	6.3	2	2.4	0.130	11/24	138.3	67	1465	91.1	92.4	92.9	0.65	0.76	0.82	28.4
18.5	25	180M	119.46	8.3	2.7	2.8	0.179	12/26	196.7	64	1470	92.1	93.2	93.6	0.7	0.81	0.85	33.6
22	30	180L	142.86	8.6	2.8	2.9	0.247	11/24	200.5	64	1475	92.9	94	94.3	0.68	0.78	0.84	40.1
30	40	200L	189.84	7.3	2.7	2.9	0.386	19/42	268.8	69	1480	94	94.7	94.5	0.65	0.76	0.82	55.9
37	50	225S/M	238.1	7.2	2.2	2.7	0.700	14/31	361.3	70	1475	93.6	94.7	94.9	0.77	0.85	0.88	63.9
45	60	225S/M	284.76	7.5	2.3	2.8	0.840	17/37	394.6	70	1480	93.9	94.7	94.8	0.78	0.86	0.89	77
55	75	250S/M	357.15	8	2.4	2.8	1.155	9/20	487.5	70	1475	93.9	94.9	95.2	0.75	0.83	0.87	95.8
75	100	280S/M	472.99	7.4	2.2	2.4	2.168	21/46	660	70	1485	94.5	95.5	95.8	0.77	0.85	0.87	130
90	125	280S/M	591.24	8.1	2.4	2.6	2.810	22/48	794.3	70	1485	95	95.7	96	0.78	0.85	0.88	154
110	150	315S/M	709.49	8	2.4	2.6	3.212	29/64	919.4	72	1485	95	95.8	96.3	0.75	0.84	0.87	190
132	175	315S/M	827.74	8.3	2.5	2.6	3.774	34/75	1007.7	72	1485	95.6	96.3	96.4	0.76	0.85	0.87	227
160	220	315S/M	1040.59	8.2	2.4	2.7	3.774	18/40	1003.3	72	1485	95.7	96.3	96.5	0.75	0.84	0.87	275
250	340	355M/L	1602.78	8.3	2.3	2.6	8.389	8/18	1380	79	1490	95.8	96.6	96.8	0.78	0.85	0.88	424
315	430	355M/L	2027.05	6.7	2.1	2.7	11.185	33/73	1934.7	79	1490	96	96.4	96.7	0.8	0.86	0.89	528
HIGH OUTPUT DESIGN																		
110	150	280S/M	709.49	8	2.4	2.6	3.212	29/64	860	70	1485	95	95.8	96.3	0.75	0.84	0.87	190

Notes:
**Class "F" insulation with ΔT105K*
Standard voltage, connection and frequency: 220-240V Δ 50Hz *380-415V Δ 50Hz*
380-415V Y 50Hz *660-690V Y 50Hz*
The values shown are subject to change without prior notice. To obtain guaranteed values please access our website.

W21 - Cast Iron Frame Motors - Top Premium Efficiency Exceeds EFF1

Output		380 V								415 V							
		Rated speed (rpm)	% of full load						Full load current I_n (A)	Rated speed (rpm)	% of full load						Full load current I_n (A)
			Efficiency η			Power Factor (Cos φ)					Efficiency η			Power Factor (Cos φ)			
kW	HP		50	75	100	50	75	100			50	75	100	50	75	100	
II pole - 3000rpm																	
4	5.5	2885	88.2	89.4	89.6	0.65	0.83	0.88	7.71	2910	88.2	89.6	89.7	0.58	0.75	0.83	7.47
5.5	7.5	2930	90.3	91.3	91.2	0.72	0.82	0.87	10.5	2950	89.8	91.2	91.3	0.66	0.77	0.83	10.1
7.5	10	2930	89	91.3	91.5	0.76	0.84	0.88	14.2	2945	89	91.3	91.6	0.7	0.8	0.85	13.4
9.2	12.5	2920	91	92	92.2	0.7	0.81	0.87	17.4	2940	91	92	92.2	0.63	0.74	0.83	16.7
11	15	2945	91.6	92.8	92.8	0.72	0.82	0.85	21.2	2955	91.6	93	93.1	0.61	0.74	0.81	20.3
15	20	2940	92.2	93.1	93.1	0.74	0.82	0.85	28.8	2950	92.1	93.2	93.3	0.68	0.8	0.83	26.9
18.5	25	2940	92.9	93.7	93.7	0.7	0.81	0.86	34.9	2950	92.8	93.8	93.8	0.63	0.77	0.84	32.7
22	30	2950	93.3	94.3	94.1	0.78	0.85	0.88	40.4	2955	93	94.2	94	0.72	0.81	0.86	37.9
30	40	2950	92.5	93.9	94.2	0.76	0.84	0.87	55.6	2960	92.6	93.9	94.2	0.74	0.82	0.85	52.1
37	50	2955	93.5	94.3	94.3	0.81	0.86	0.88	67.7	2960	93	94	94.4	0.73	0.82	0.86	63.4
45	60	2960	94.6	95.4	95.3	0.84	0.89	0.91	78.8	2970	94.4	95.4	95.4	0.8	0.87	0.89	73.7
55	75	2955	94.3	95.2	95.1	0.86	0.9	0.92	95.5	2960	94.6	95.5	95.4	0.83	0.88	0.9	89.1
75	100	2970	95	95.9	95.9	0.84	0.89	0.9	132	2975	95.2	96.2	96.1	0.8	0.86	0.88	123
90	125	2975	94.3	95.6	96	0.84	0.89	0.9	158	2980	94.3	95.6	96	0.8	0.87	0.89	147
110	150	2970	95.2	96.4	96.4	0.78	0.85	0.89	195	2975	95	96.3	96.3	0.72	0.82	0.87	183
132	175	2970	95.5	96.6	96.6	0.81	0.88	0.89	233	2975	95.3	96.5	96.5	0.75	0.86	0.88	216
160	220	2970	95.5	96.4	96.5	0.81	0.87	0.9	280	2975	95.3	96.5	96.6	0.77	0.85	0.88	262
IV pole - 1500rpm																	
4	5.5	1440	87.5	88.7	88.9	0.7	0.8	0.85	8.043	1450	87.3	89.9	89.9	0.62	0.74	0.81	7.642
5.5	7.5	1460	89	90	90.5	0.72	0.81	0.86	10.7	1470	88	89.9	90.6	0.65	0.77	0.83	10.2
7.5	10	1460	89.5	91	91.5	0.73	0.82	0.86	14.5	1470	88	91	91.7	0.68	0.8	0.84	13.5
11	15	1465	91	92.2	92.5	0.64	0.75	0.82	22	1475	91	92.2	92.6	0.6	0.7	0.78	21.2
15	20	1460	91.2	92.3	92.8	0.7	0.79	0.84	29.2	1470	91	92.3	92.8	0.6	0.73	0.8	28.1
18.5	25	1465	92	93.2	93.5	0.73	0.84	0.87	34.6	1475	92	93.2	93.6	0.65	0.78	0.84	32.7
22	30	1470	93	94	94.3	0.7	0.8	0.85	41.7	1475	92.5	93.9	94.3	0.66	0.76	0.83	39.1
30	40	1475	94.1	94.6	94.4	0.69	0.79	0.84	57.5	1480	93.8	94.5	94.5	0.6	0.73	0.8	55.2
37	50	1475	93.5	94.7	94.9	0.78	0.86	0.89	66.6	1480	93.3	94.6	94.8	0.76	0.84	0.87	62.4
45	60	1475	94	94.8	94.5	0.79	0.87	0.9	80.4	1480	93.8	94.7	94.8	0.76	0.85	0.88	75
55	75	1475	94	94.8	95.2	0.76	0.84	0.88	100	1480	93.8	94.8	95.1	0.73	0.82	0.86	93.6
75	100	1480	94.6	95.5	95.8	0.79	0.86	0.88	135	1485	94.3	95.5	95.7	0.75	0.84	0.86	127
90	125	1485	95	95.6	95.9	0.8	0.86	0.89	160	1485	95	95.7	96	0.75	0.84	0.87	150
110	150	1480	95	95.8	96.2	0.76	0.85	0.88	197	1485	94.8	95.7	96.2	0.73	0.83	0.86	185
132	175	1480	95.5	96.3	96.3	0.78	0.86	0.88	237	1485	95.5	96.2	96.4	0.73	0.84	0.86	222
160	220	1480	95.8	96.3	96.5	0.77	0.85	0.88	286	1485	95.5	96.2	96.5	0.7	0.83	0.85	271
250	340	1490	96	96.6	96.8	0.8	0.86	0.89	441	1490	95.5	96.5	96.8	0.75	0.84	0.87	413
315	430	1490	96.2	96.5	96.6	0.83	0.87	0.89	557	1490	95.6	96.3	96.7	0.77	0.84	0.88	515
HIGH OUTPUT DESIGN																	
110	150	1480	95	95.8	96.2	0.76	0.85	0.88	197	1485	94.8	95.7	96.2	0.73	0.83	0.86	185

W21 - Cast Iron Frame Motors - Top Premium Efficiency Exceeds EFF1

Output		IEC Frame	Full load torque C_n (Nm)	Locked rotor current I_l/I_n	Locked rotor torque T_l/T_n	Break-down torque T_b/T_n	Inertia J kgm²	Allowable locked rotor time Hot/Cold (s)	Weight (kg)	Sound dB (A)	Rated speed (rpm)	400 V						Full load current I_n (A)
												% of full load						
												Efficiency η			Power Factor (Cos φ)			
kW	HP											50	75	100	50	75	100	
VI pole - 1000rpm																		
2.2	3	112M	22.06	6.2	3	2.8	0.022	16	45	48	955	83	85.5	85.5	0.48	0.61	0.69	5.383
3	4	132S	29.11	6	2.1	2.5	0.043	28	59	52	965	85.5	86.9	86.9	0.53	0.66	0.73	6.826
4	5.5	132M	40.03	6.5	2.1	2.4	0.050	21	68	52	965	87	87.9	87.9	0.54	0.67	0.74	8.876
5.5	7.5	132M/L	54.59	6.5	2.2	2.6	0.066	17	79	52	965	88	89.1	89.1	0.54	0.67	0.74	12.04
7.5	10	160M	72.41	6.6	2.5	2.9	0.144	19	106	56	970	87.5	90.1	90.1	0.61	0.74	0.81	14.8
11	15	160L	108.62	7	2.8	3	0.176	13	136	56	970	90	91.2	91.2	0.6	0.73	0.8	21.761
15	20	180L	143.35	8.5	3.2	3.5	0.345	12	208	56	980	91.8	92	92	0.73	0.84	0.89	26.442
18.5	25	200L	180.1	6.3	2.3	2.5	0.377	17	219	58	975	91.3	92.7	93	0.67	0.78	0.82	35.1
22	30	200L	216.12	6.2	2.3	2.6	0.448	15	228	58	975	91.2	92.9	93	0.65	0.75	0.82	41.7
30	40	225S/M	285.24	7	2.6	2.6	0.988	21	366	61	985	91.7	93.6	93.6	0.73	0.81	0.85	54.4
37	50	250S/M	358.37	7	2.5	2.6	1.318	20	450	61	980	91.8	94	94.1	0.72	0.81	0.84	67.6
45	60	280S/M	425.69	6.8	2.1	2.8	2.298	27	610	66	990	94	94.4	94.4	0.67	0.77	0.82	83.909
55	75	280S/M	532.12	7	2.5	3.2	2.643	21	655	66	990	94.1	94.8	94.8	0.64	0.75	0.81	103.383
75	100	280S/M	709.49	7.7	2.9	3.5	3.447	15	725	69	990	94.3	95.2	95.2	0.62	0.73	0.81	140.384
75	100	315S/M	709.49	7.7	2.9	3.5	3.447	15	725	69	990	94.3	95.2	95.2	0.62	0.73	0.81	140.384
90	125	315S/M	886.86	7.8	2.8	3.3	4.022	16	810	69	990	95	95.5	95.5	0.66	0.77	0.82	165.884
110	150	355M/L	1058.89	6.7	2.2	3	9.280	40	1460	69	995	94.2	95.4	95.8	0.59	0.71	0.78	212
132	175	355M/L	1235.37	6.2	2	2.7	10.440	40	1600	73	995	94.7	95.7	96.1	0.63	0.74	0.8	248
150	200	355M/L	1411.85	6.6	2.2	2.8	11.136	60	1650	73	995	94.8	95.7	96.2	0.61	0.73	0.79	285
160	220	355M/L	1553.04	6.2	2	2.6	11.136	60	1570.1	73	995	94.9	95.8	96.2	0.63	0.74	0.8	300
185	250	355M/L	1764.81	6	1.9	2.5	11.600	60	1700	73	995	95.1	96	96.2	0.65	0.76	0.81	343
220	300	355M/L	2117.78	5.7	1.9	2.3	13.456	60	1795	73	995	95.4	96	96.2	0.68	0.77	0.82	403
250	340	355M/L	2412.27	6.1	2.1	2.6	14.383	60	1890	73	990	95.3	96	96.2	0.64	0.74	0.8	469
VIII pole - 750rpm																		
1.5	2	112M	19.65	5.4	2.6	2.9	0.024	32	45	46	715	78.2	81	82.1	0.4	0.51	0.63	4.05
2.2	3	132S	29.47	6.2	2.6	2.7	0.075	25	70	48	715	81	84.3	84.3	0.5	0.63	0.71	5.11
3	4	132M	38.75	6.5	3.7	3.2	0.085	21	78	48	725	81	84.9	84.9	0.5	0.63	0.72	6.828
4	5.5	160M	52.56	5.2	2.8	3	0.122	27	110	51	735	82	85.4	86.7	0.37	0.49	0.58	11.1
5.5	7.5	160M	72.16	5.6	2.7	3	0.165	22	130	51	730	84	86.5	87.7	0.4	0.52	0.62	14.1
7.5	10	160L	96.88	5.2	2.2	2.6	0.165	19	145	51	725	87.5	88.9	88.9	0.5	0.62	0.71	16.5
11	15	180L	144.33	7.5	2.6	2.8	0.303	12	183	51	730	90	90.3	90.3	0.58	0.71	0.78	21.7
15	20	200L	191.13	5	2.2	2.4	0.502	28	300	53	735	89	90.6	91.4	0.5	0.63	0.69	33.1
18.5	25	225S/M	238.91	7.5	2.3	3	0.847	18	340	56	735	90	91.5	92	0.61	0.73	0.8	35
22	30	225S/M	286.69	8.5	2.4	3.2	0.988	18	365	56	735	91.3	92.5	92.6	0.62	0.73	0.8	41.3
30	40	250S/M	382.26	8	2.3	3	1.224	17	440	56	735	91	92.8	93.2	0.58	0.71	0.79	56.7
37	50	280S/M	474.59	6.5	2.1	2.4	2.643	32	590	59	740	92.1	93.4	93.9	0.6	0.72	0.79	69.5
45	60	280S/M	569.51	6.5	2.2	2.6	3.103	32	650	59	740	92.7	93.8	94.2	0.58	0.7	0.77	86.3
55	75	280S/M	711.89	7	2.2	2.9	3.447	32	730	62	740	93.2	94.3	94.6	0.54	0.66	0.74	109
55	75	315S/M	711.89	7	2.2	2.9	3.447	32	730	62	740	93.2	94.3	94.6	0.54	0.66	0.74	109
75	100	315S/M	949.18	7	2.1	2.9	4.367	20	876	62	740	94	95	95.2	0.56	0.69	0.75	146

Notes:
**Class "F" insulation with ΔT105K*
Standard voltage, connection and frequency: 220-240V Δ 50Hz — 380-415V Δ 50Hz
380-415V Y 50Hz — 660-690V Y 50Hz
The values shown are subject to change without prior notice. To obtain guaranteed values please access our website.

W21 - Cast Iron Frame Motors - Top Premium Efficiency Exceeds EFF1

Output		380 V								415 V							
		Rated speed (rpm)	% of full load						Full load current I_n (A)	Rated speed (rpm)	% of full load						Full load current I_n (A)
			Efficiency η			Power Factor (Cos φ)					Efficiency η			Power Factor (Cos φ)			
kW	HP		50	75	100	50	75	100			50	75	100	50	75	100	
VI pole - 1000rpm																	
2.2	3	950	82.5	85	85	0.52	0.64	0.72	5.462	960	82	85	85	0.46	0.6	0.59	6.103
3	4	960	85.5	86.5	86	0.57	0.69	0.75	7.067	970	85	86.9	86.9	0.5	0.64	0.71	6.764
4	5.5	960	87	87.5	87	0.59	0.7	0.77	9.072	965	86.5	87.9	87.9	0.52	0.64	0.72	8.793
5.5	7.5	960	87.5	88.5	88.5	0.59	0.7	0.76	12.424	965	87.5	89	89.1	0.51	0.64	0.72	11.927
7.5	10	965	88	89.7	89.9	0.65	0.77	0.82	15.5	975	87	89.5	90.1	0.58	0.71	0.79	14.7
11	15	970	90.5	91	91	0.65	0.77	0.83	22.127	975	90	91.2	91.2	0.57	0.7	0.78	21.513
15	20	975	91	91.8	91.8	0.77	0.86	0.9	27.584	980	91.5	92.2	92.2	0.7	0.82	0.87	26.016
18.5	25	970	91.8	92.6	92.7	0.72	0.81	0.84	36.1	980	90.8	92.6	93	0.64	0.75	0.8	34.6
22	30	970	92	92.9	92.9	0.7	0.78	0.84	42.8	980	90.4	92.2	93	0.6	0.72	0.8	41.2
30	40	980	92	93	93.4	0.76	0.84	0.86	56.7	985	91.4	93	93.6	0.7	0.79	0.84	53.1
37	50	980	92	94	93.9	0.75	0.83	0.86	69.6	985	91.6	94	94.1	0.69	0.79	0.82	66.8
45	60	985	94	94.2	94.2	0.7	0.79	0.83	87.446	990	93.7	94.4	94.4	0.64	0.75	0.8	82.898
55	75	985	94.2	94.6	94.6	0.67	0.77	0.82	107.724	990	93.8	94.8	94.8	0.61	0.72	0.79	102.169
75	100	990	94.5	95	95	0.66	0.77	0.82	146.278	990	94	94.8	95.2	0.58	0.7	0.78	140.514
75	100	990	94.5	95	95	0.66	0.77	0.82	146.278	990	94	94.8	95.2	0.58	0.7	0.78	140.514
90	125	990	95	95.3	95.3	0.7	0.79	0.84	170.815	990	95	95.5	95.5	0.63	0.75	0.81	161.862
110	150	995	94.5	95.5	95.7	0.63	0.74	0.8	218	995	94	95	95.9	0.56	0.68	0.76	210
132	175	990	95	95.5	96	0.66	0.76	0.81	258	995	94.5	95.5	96.2	0.6	0.72	0.78	245
150	200	995	95	95.8	96.1	0.65	0.76	0.81	292	995	94.5	95.6	96.3	0.58	0.71	0.77	282
160	220	995	95.2	95.8	96.1	0.67	0.77	0.82	308	995	94.7	95.7	96.3	0.6	0.72	0.79	293
185	250	995	95.5	96	96.1	0.7	0.78	0.82	356	995	94.9	95.8	96.3	0.6	0.74	0.79	339
220	300	995	95.6	96	96.1	0.71	0.79	0.83	419	995	95.3	96	96.3	0.65	0.75	0.81	393
250	340	990	95.5	96.1	96.1	0.68	0.77	0.82	482	990	95	96	96.3	0.6	0.72	0.78	464
VIII pole - 750rpm																	
1.5	2	700	79.8	81.6	81.8	0.47	0.59	0.69	4.03	715	78.2	81	82.1	0.4	0.51	0.63	4.05
2.2	3	705	83	84.3	84.2	0.58	0.7	0.75	5.29	715	81	84.3	84.3	0.5	0.63	0.71	5.11
3	4	751	83.2	84.6	84.5	0.57	0.7	0.77	7.005	725	81	84.9	84.9	0.5	0.63	0.72	6.828
4	5.5	730	84	86.2	86.6	0.44	0.57	0.66	10.6	735	82	85.4	86.7	0.37	0.49	0.58	11.1
5.5	7.5	725	86	87.7	87.7	0.46	0.6	0.69	13.8	730	84	86.5	87.7	0.4	0.52	0.62	14.1
7.5	10	720	88	88.9	88.7	0.58	0.7	0.76	16.9	725	87.5	88.9	88.9	0.5	0.62	0.71	16.5
11	15	725	90	90.3	90	0.66	0.76	0.81	22.9	730	90	90.3	90.3	0.58	0.71	0.78	21.7
15	20	730	90	91	91.2	0.56	0.67	0.73	34.2	735	89	90.6	91.4	0.5	0.63	0.69	33.1
18.5	25	730	91	91.8	91.8	0.69	0.79	0.84	36.5	735	90	91.5	92	0.61	0.73	0.8	35
22	30	730	91.7	92.4	92.4	0.68	0.78	0.84	43.1	735	91.3	92.5	92.6	0.62	0.73	0.8	41.3
30	40	730	92	93	93	0.66	0.77	0.83	59	735	91	92.8	93.2	0.58	0.71	0.79	56.7
37	50	735	92.9	93.5	93.8	0.68	0.76	0.81	74	740	92.1	93.4	93.9	0.6	0.72	0.79	69.5
45	60	735	93.3	94	94.1	0.66	0.77	0.81	89.7	740	92.7	93.8	94.2	0.58	0.7	0.77	86.3
55	75	740	94	94.6	94.6	0.62	0.72	0.78	113	740	93.2	94.3	94.6	0.54	0.66	0.74	109
55	75	740	94	94.6	94.6	0.62	0.72	0.78	113	740	93.2	94.3	94.6	0.54	0.66	0.74	109
75	100	740	94.5	95.2	95	0.64	0.75	0.79	152	740	94	95	95.2	0.56	0.69	0.75	146

W21 - Cast Iron Frame Motors

Mechanical Data

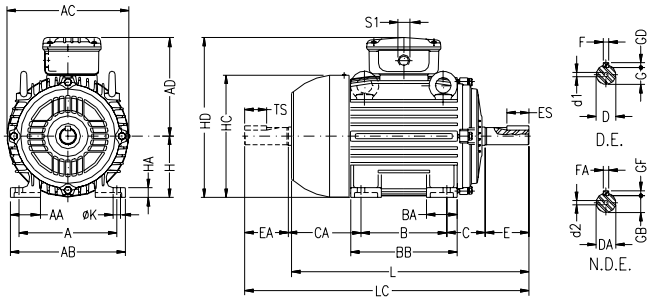

Standard Frame

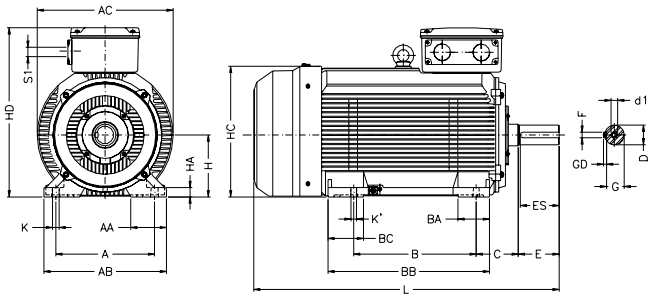

315B Frame

IEC FRAME	A	AA	AB	AC	AD	B	BA	BB	C	CA	SHAFT DIMENSIONS												H	HA	HC	HD	K	L	LC	S1	d1	d2	BEARINGS	
											D	E	ES	F	G	GD	DA	EA	TS	FA	GB	GF												D.E.	N.D.E.
63	100	21	116	125	119	80	22	95	40	78	11j6	23	14	4	8.5	4	9j6	20	12	3	7.2	3	63	8	124	182	7	216	241	2xM20x1.5	EM4	EM3	6201-ZZ	
71	112	36	132	141	127	90	38	113.5	45	88	14j6	30	18	5	11	5	11j6	23	14	4	8.5	4	71	12	139	198		248	276		DM5	EM4	6203-ZZ	6202-ZZ
80	125	35	149	159	136	100	40	125.5	50	93	19j6	40	28	6	15.5	6	14j6	30	18	5	11	5	80	13	157	216	10	276	313		DM6	DM4	6204-ZZ	6203-ZZ
90S	140	38	164	179	155	125	42	131	56	104	24j6	50	36	8	20	7	16j6	40	28	5	13	5	90	15	177	245		304	350	2xM25x1.5	DM8	DM6	6205-ZZ	6204-ZZ
90L								156																				329	375					
100L	160	49	188	199	165	140	50	173	63	118	28j6	60	45		24		22j6	50	36	6	18.5	6	100	16	198	265	12	376	431		DM10	DM8	6206-ZZ	6205-ZZ
112M	190	48	220	222	184			177	70	128							24j6			8	20	7	112	18.5	235	296		393	448				6307-ZZ	6206-ZZ
132S	216	51	248	270	212	178	55	187	89	150	38k6	80	63	10	33	8	28j6	60	45		24		132	20	274	344		452	519	2xM32x1.5	DM12	DM10	6308-ZZ	6207-ZZ
132M								225																				490	557					
160M	254	64	308	312	255	210	65	254	108	174	42k6	110	80	12	37	8	42k6	110	80	12	37	8	160	22	317	415	14.5	598	712	2xM40x1.5	DM16		6309-C3	6209-Z-C3
160L						254		298																				642	756					
180M	279	80	350	358	275	241	75	294	121	200	48k6			14	42.5	9	48k6			14	42.5	9	180	28	360	455		664	782				6311-C3	6211-Z-C3
180L						279		332																				702	820					
200M	318	82	385	396	300	267	85	318	133	222	55m6			16	49	10				16	49	10	200	30	402	500	18.5	729	842	2xM50x1.5	M20		6312-C3	6212-Z-C3
200L						305		370																				767	880					
225S/M	356	80	436	478	373	286	105	391	149	280	55m6*		100				55m6*		100	16	49	10	225	34	466	598		817	935				6314-C3	
						311				255	60m6				53		60m6											847	995					
250S/M	406	100	506				138	449	168	312	60m6*			18		11	60m6*	140	125	18	53	11	250	42	491	623	24	923	1071					
						349				274	65m6	140	125		58		60m6																	
280S/M	457		557	600	468	368	142	510	190	350	65m6*						60m6*						280		578	748		1036	1186					
						419				299	75m6			20	67.5	12	65m6				58												6316-C3	
315S/M	508	129	628		497	406	152	558	216	376	65m6*			18	58	11	60m6*				53		315	52	613	812	28	1126	1274	2xM63x1.5			6314-C3	
						457				325	80m6	170	160	22	71	14	65m6				58							1156	1308				6319-C3	6316-C3
315B		182	630	698	595	630	162	830			75m6*	140	125	20	67.5	12	-							47.5	664	869		1432	-		M20	-	6316-C3	6314-C3
											100m6	210	200	28	90	16												1502			M24		6322-C3	6319-C3
355M/L	610	148	750	816	685	560	200	760	254	458	75m6*	140	125	20	67.5	12	60m6*	140	125	18	53	11	355	50	725	1040		1396	1561		M20		6316-C3	6314-C3
						630				388	100m6	210	200	28	90	16	80m6	170	160	22	71	14						1466	1661		M24	M20	6322-C3	6319-C3

Notes:
** Shaft dimensions for II pole motors, only for direct coupling.*
*** For frame 100L, 3kW, 4 poles, Premium Efficiency Line, the L dimension is 420mm and LC dimension is 475mm.*
- All dimensions are in millimeters.
- Larger and smaller flanges on request.
- The data for frame 355M/L shown above are for horizontal mounting applications under standard coupling loads. The customer must inform when application is vertical or under special coupling loads.
- The values shown are subject to change without prior notice. To obtain guaranteed values please contact our nearest sales office.

** This data apply to Cast Iron Frame – Improved Efficiency - EFF2, Premium Efficiency - EFF1 and Top Premium Efficiency – Exceeds EFF1.*

Cast Iron Frame

Mechanical Data

"FF" Flange

IEC FRAME	"FF" FLANGE									N° OF HOLES
	FLANGE	C	LA	M	N	P	T	S	α	
63	FF-115	40	9	115	95	140	3	10	45°	4
71	FF-130	45		130	110	160	3.5			
80	FF-165	50	10	165	130	200		12		
90S/L		56								
100L	FF-215	63	11	215	180	250	4	15		
112M		70								
132S/M	FF-265	89	12	265	230	300				
160M/L	FF-300	108	18	300	250	350	5	19		
180M/L		121								
200M/L	FF-350	133		350	300	400				
225S/M	FF-400	149		400	350	450			22°30'	8
250S/M	FF-500	168		500	450	550				
280S/M		190								
315S/M	FF-600	216	22	600	550	660	6	24		
315B										
355M/L	FF-740	254		740	680	800				

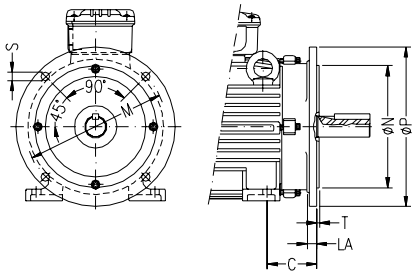

Standard Frame

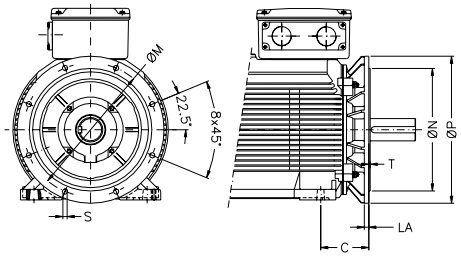

315B Frame

"C" Din Flange

IEC FRAME	"C" DIN FLANGE							N° OF HOLES
	FLANGE	C	M	N	P	S	T	
63	C-90	40	75	60	90	M5	2.5	4
71	C-105	45	85	70	105	M6		
80	C-120	50	100	80	120		3	
90S/L	C-140	56	115	95	140	M8		
100L	C-160	63	130	110	160		3.5	
112M		70						
132S/M	C-200	89	165	130	200	M10		

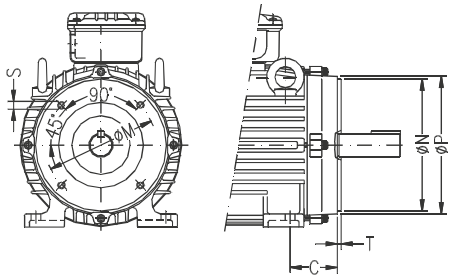

Standard Frame

Aluminium Frame Motors
Improved Efficiency EFF2

Standard Features:

- Three-phase, multivoltage, IP55, TEFC
- Output: 0.12 up to 11kW
- Frames: 63 up to 132M
- Voltage: 220-240/380-415V (up to 100L)
  380-415/660V (from 112M and up)
- Class “F” insulation (ΔT=80K)
- Continuous duty: S1
- Design N
- Ambient temperature: 40°C, at 1000 m.a.s.l.
- Squirrel cage rotor/Aluminium die cast
- Stainless steel nameplate AISI 316
- Dimensions according to IEC-72
- Performance characteristics according to IEC 34
- Color: RAL 5007

Typical Applications:

- Pumps
- Fans
- Crushers
- Conveyor belts
- Mills
- Centrifugal machines
- Presses
- Elevators
- Packaging equipment
- Grinders and others.

Options Available:

- Non-drive end shaft
- Bearing sealing
- Shaft dimensions to customer requirements
- Canopy for V1 applications
- Special painting
- Space heaters
- Thermal protection (thermistors)
- Class “H” insulation
- Other mounting configurations
- Other modifications, on request

More options available, on request

Bearings
All 3000rpm and 1500rpm motors are supplied with ball bearings as standard. The bearings are designed to ensure long life of the motor, even under heavy operating conditions.

Fan cover
Steel fan covers for 63 up to 132M frames.

Fan
Made of rigid plastic. Non sparking, non toxic, resistant to environmental conditions, and ensures low noise operation.

Frame
Made of Aluminium with external fins for maximum cooling effect and minimum weight. This line of product is defined as a modern and easy assembly system, allowing change of mounting configuration including rotation of terminal box and/or removal of feet. Due to the material used on the frame construction there is an optimization of the electrical and mechanical designs resulting in an improved efficiency of the set and reduced weight. Resistance to corrosion is another benefit making it suitable for severe environments.

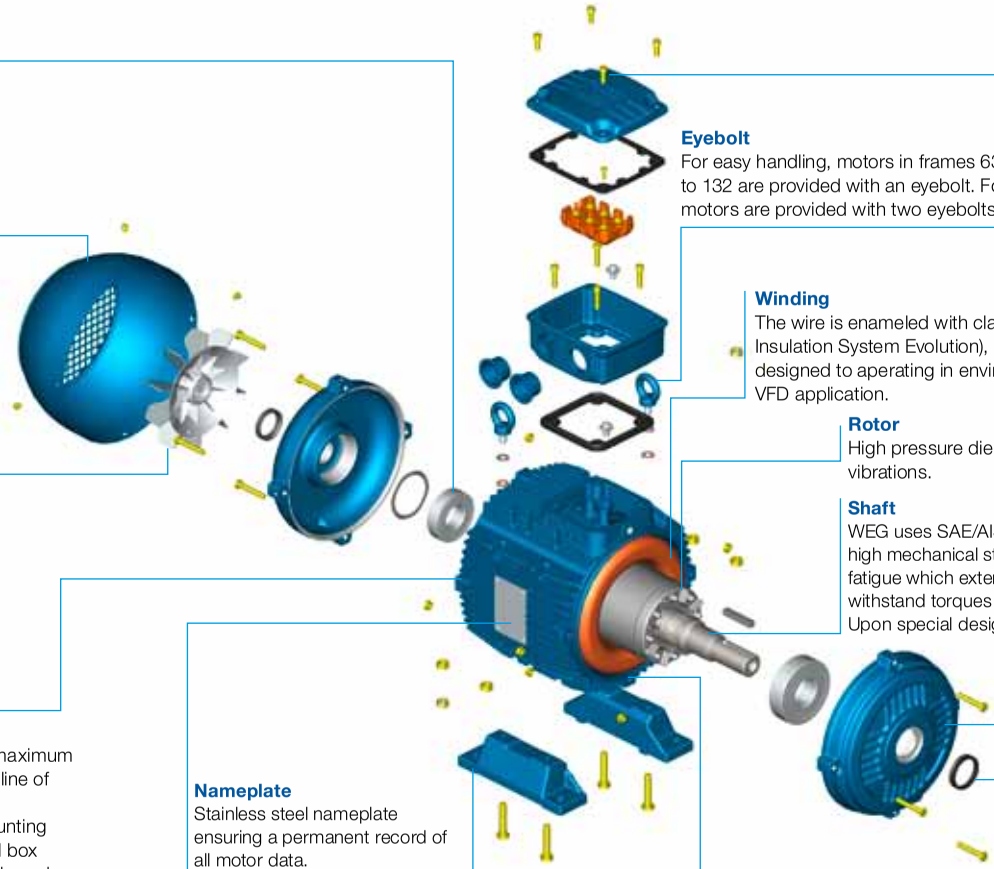

Nameplate
Stainless steel nameplate ensuring a permanent record of all motor data.

Feet
Removable feet on aluminium frames allow various mounting configurations.

Terminal Box
Made of cast iron with plenty of internal space, the teminal box can be rotated at 90º intervals, having one or two threaded holes to connect power supply cables.
* Available as top or side mounted.

Eyebolt
For easy handling, motors in frames 63 up to 132 are provided with an eyebolt. Footless motors are provided with two eyebolts.

Winding
The wire is enameled with class H Varnish Supplied with patented WISE (WEG Insulation System Evolution), which allows three times longer motor lifetime designed to aperating in environments with excess of moisture and suitable for VFD application.

Rotor
High pressure die cast rotor dynamically balanced, thus reducing vibrations.

Shaft
WEG uses SAE/AISI 1040/45 carbon steel as standard, which provides high mechanical strength, preventing bending under load and minimizes fatigue which extends lifetime performance. Specially designed to withstand torques caused during motor acceleration and deceleration. Upon special design, shaft can have second end.

Stator
Built with low loss electrical steel lamination reducing electrical losses and operating temperature

Endshields
Made of cast iron, they are provided with external fins for better heat dissipation, thus increasing bearing life time.

Seals
WEG motors are fitted with either V-ring seals, Oil seals or Lip seals and may also be fitted with Labyrinth Taconite seals or W3Seal to ensure the best possible protection under dusty and high moisture environments.

Aluminium Frame Motors - Improved Efficiency EFF2

Output		IEC Frame	Full load torque C_n (Nm)	Locked rotor current I_l/I_n	Locked rotor torque T_l/T_n	Break-down torque T_b/T_n	Inertia J kgm²	Allowable locked rotor time Hot/Cold (s)	Weight (kg)	Sound dB (A)	Rated speed (rpm)	400 V						Full load current I_n (A)
												% of full load						
												Efficiency η			Power Factor (Cos φ)			
kW	HP											50	75	100	50	75	100	
II pole - 3000rpm																		
0.12	0.16	63	0.41	3.8	2.3	2.3	0.000	27/59	5.3	52	2720	45.5	53.5	56	0.55	0.68	0.8	0.387
0.18	0.25	63	0.64	4.2	2.4	2.3	0.000	30/66	5.5	52	2730	50.5	56.5	59	0.55	0.69	0.8	0.55
0.25	0.33	63	0.85	4.3	2.5	2.3	0.000	25/55	5.8	52	2720	52	57	60	0.5	0.65	0.76	0.791
0.37	0.5	71	1.29	4.3	2.3	2.3	0.000	23/51	7	56	2730	61.2	66	67.6	0.6	0.75	0.85	0.929
0.55	0.75	71	1.94	4.2	2.5	2.7	0.000	10/22	7.8	56	2710	67.5	70	70	0.65	0.78	0.87	1.3
0.75	1	80	2.54	5	2.4	2.4	0.001	9/20	9.6	59	2770	66	72	73	0.59	0.73	0.82	1.81
1.1	1.5	80	3.8	5	2.6	2.6	0.001	7/15	11	59	2770	74	76.5	76.5	0.6	0.75	0.83	2.5
1.5	2	90S/L	4.95	6.3	2.7	2.6	0.002	7/15	15.5	64	2840	77	79.5	79.5	0.63	0.76	0.83	3.28
2.2	3	90S/L	7.5	6.8	2.8	2.9	0.002	9/20	17.8	64	2810	78	80	81.5	0.63	0.77	0.85	4.584
3	4	100L	9.79	6.7	2.3	2.8	0.005	9/20	24	67	2870	81.3	83	83.5	0.69	0.81	0.87	5.961
4	5.5	112M	13.44	6.8	2.4	3	0.007	9/20	33	64	2875	82	84	85	0.71	0.82	0.87	7.81
5.5	7.5	132S	18.1	6.5	2.4	3	0.016	11/24	43.6	68	2910	83.5	86	86.5	0.71	0.81	0.87	10.5
7.5	10	132S	24.22	6.4	2.3	2.6	0.019	11/24	50	68	2900	86	87.5	87.5	0.72	0.82	0.87	14.2
9.2	12.5	132M	30.17	7.5	2.7	3.1	0.024	8/18	56	68	2910	86.5	88.5	88.5	0.7	0.81	0.86	17.4
11	15	132M	36.08	8	2.7	3.2	0.028	8/18	61.3	68	2920	88	89.5	89.5	0.71	0.81	0.86	20.6
HIGH OUTPUT DESIGN																		
0.37	0.5	63	1.28	5.2	3.1	2.9	0.000	14/31	6.7	52	2740	67	71	71.3	0.57	0.7	0.79	0.948
0.75	1	71	2.5	6.2	3.1	3.1	0.001	8/18	9.3	56	2810	69	73	74	0.65	0.76	0.84	1.74
1.5	2	80	5.07	6	3	2.7	0.001	10/22	12.4	59	2770	78	79	78.2	0.67	0.81	0.86	3.22
3	4	90S/L*	9.93	6.2	3.2	3.1	0.003	6/13	18.3	64	2830	81	82	82	0.55	0.68	0.78	6.77
4	5.5	100L	13.46	7.5	2.9	3.1	0.007	7/15	26.7	67	2870	81	82.3	82.5	0.72	0.81	0.86	8.14
5.5	7.5	112M	18.36	7.7	2.5	3	0.010	10/22	39.8	64	2870	86.5	87.5	87.5	0.8	0.87	0.9	10.1
7.5	10	112M*	24.47	7.6	3	3	0.010	6/13	40.3	64	2870	86.5	87.5	87.5	0.59	0.72	0.81	15.3
IV pole - 1500rpm																		
0.12	0.16	63	0.82	3.5	2	2.2	0.000	30/66	5.4	44	1375	45	54	57	0.49	0.61	0.72	0.422
0.18	0.25	63	1.29	3.4	2	2.2	0.000	23/51	6.4	44	1360	46	54	58	0.49	0.63	0.74	0.605
0.25	0.33	71	1.77	3.5	1.9	2.1	0.000	21/46	6.9	43	1310	50	55	59	0.5	0.65	0.76	0.805
0.37	0.5	71	2.66	3.7	2	2	0.001	17/37	8	43	1320	55	60	62	0.5	0.63	0.76	1.133
0.55	0.75	80	3.74	4.7	2.1	2.2	0.002	17/37	10.2	44	1410	58.5	66.3	68	0.54	0.7	0.82	1.424
0.75	1	80	5.04	5	2.3	2.2	0.002	14/31	11.2	44	1395	64.5	71	72	0.55	0.7	0.81	1.856
1.1	1.5	90S/L	7.42	5.6	2.3	2.4	0.004	8/18	15.3	49	1420	70	76	77	0.55	0.69	0.79	2.61
1.5	2	90S/L	9.96	5.5	2.3	2.4	0.005	8/18	16.6	49	1410	76.5	78.5	79	0.58	0.73	0.82	3.342
2.2	3	100L	14.94	5.6	2.4	2.6	0.007	9/20	21.2	53	1410	80.5	81.5	81.5	0.6	0.74	0.82	4.751
3	4	100L	20.07	6	2.8	3	0.008	8/18	24.2	53	1400	80	81	82.6	0.57	0.72	0.81	6.472
4	5.5	112M	26.83	6.2	2.1	2.5	0.015	13/29	35.6	56	1440	83.5	84.6	85	0.65	0.77	0.83	8.18
5.5	7.5	132S	36.33	6.5	2.1	2.5	0.035	11/24	43.9	60	1450	84.5	85.6	86	0.63	0.77	0.84	11
7.5	10	132M	48.27	6.7	2.1	2.9	0.045	8/18	50	60	1455	85	86.5	87	0.63	0.77	0.84	14.8
9.2	12.5	132M	60.34	7.5	2.2	2.8	0.058	6/13	58.5	60	1455	86.5	87.7	87.7	0.64	0.78	0.85	17.8
HIGH OUTPUT DESIGN																		
0.25	0.33	63	1.64	5	3.1	3.1	0.001	17/37	7	44	1415	52	60	62	0.44	0.54	0.65	0.895
0.55	0.75	71	3.8	5	2.8	2.9	0.001	19/42	10	43	1385	66	70.5	72	0.45	0.58	0.68	1.62
1.1	1.5	80	7.61	5	2.3	2.3	0.003	10/22	12.7	44	1385	65	68.5	69	0.55	0.7	0.81	2.84
2.2	3	90S/L	14.94	5.8	2.7	2.5	0.007	8/18	20	49	1410	75	76.5	76.5	0.57	0.71	0.8	5.19
4	5.5	100L*	27.79	6.7	2.6	2.6	0.011	7/15	30.1	53	1390	81.5	82.2	82	0.64	0.76	0.83	8.483
5.5	7.5	112M*	36.33	6.5	2.5	2.6	0.019	8/18	40.4	56	1450	84	85.7	85.7	0.54	0.66	0.75	12.4
7.5	10	132S	48.27	6.7	2.1	2.9	0.045	8/18	49.9	60	1455	85	86.5	87	0.63	0.77	0.84	14.8

Notes:
**Class "F" insulation with ΔT105K*
Standard voltage, connection and frequency: 220-240V Δ 50Hz 380-415V Δ 50Hz
380-415V Y 50Hz 660-690V Y 50Hz
The values shown are subject to change without prior notice. To obtain guaranteed values please access our website.

Aluminium Frame Motors - Improved Efficiency EFF2

Output		380 V								415 V							
		Rated speed (rpm)	% of full load						Full load current I_n (A)	Rated speed (rpm)	% of full load						Full load current I_n (A)
			Efficiency η			Power Factor (Cos φ)					Efficiency η			Power Factor (Cos φ)			
kW	HP		50	75	100	50	75	100			50	75	100	50	75	100	
II pole - 3000rpm																	
0.12	0.16	2690	48	55	58.8	0.59	0.74	0.84	0.369	2735	43	51	53.5	0.52	0.64	0.75	0.416
0.18	0.25	2700	52.5	57.5	59.5	0.6	0.75	0.85	0.541	2750	47.8	54.5	58	0.52	0.64	0.76	0.568
0.25	0.33	2685	54	59	60	0.56	0.71	0.81	0.782	2740	50	55.5	59.9	0.47	0.6	0.72	0.806
0.37	0.5	2700	62.8	66.5	67	0.66	0.81	0.89	0.943	2750	60	65.5	67	0.55	0.7	0.81	0.948
0.55	0.75	2670	68.5	70	69	0.71	0.83	0.9	1.35	2730	65	69	70.1	0.6	0.73	0.84	1.3
0.75	1	2740	69	73	72.5	0.67	0.79	0.86	1.83	2790	63	70.5	72.5	0.51	0.67	0.78	1.85
1.1	1.5	2745	75.5	76.5	76.5	0.68	0.81	0.87	2.51	2790	72	75.5	76.3	0.54	0.7	0.8	2.51
1.5	2	2820	78	80.1	78.9	0.7	0.81	0.87	3.32	2855	75	78.9	79.3	0.57	0.71	0.8	3.29
2.2	3	2790	78.5	80.2	80.8	0.7	0.82	0.88	4.701	2820	77.5	79.8	81.5	0.57	0.72	0.82	4.58
3	4	2855	82.4	83	83	0.75	0.85	0.89	6.17	2880	80.5	82.4	83.5	0.64	0.77	0.84	5.95
4	5.5	2860	83	84.2	84.5	0.77	0.86	0.89	8.08	2885	80.8	83.4	84.8	0.66	0.78	0.85	7.72
5.5	7.5	2895	84.4	86	86	0.77	0.85	0.89	10.9	2915	82.7	85.5	86.5	0.66	0.78	0.84	10.5
7.5	10	2890	86.8	87.5	87	0.78	0.86	0.89	14.7	2910	85	87	87.5	0.66	0.78	0.84	14.2
9.2	12.5	2900	87.4	88.5	88.4	0.76	0.85	0.89	17.8	2915	85.3	88	88.4	0.63	0.76	0.83	17.4
11	15	2910	88.5	89.5	89	0.76	0.84	0.88	21.3	2930	87.5	89	89.5	0.66	0.77	0.83	20.6
HIGH OUTPUT DESIGN																	
0.37	0.5	2710	69.5	71.7	71	0.62	0.75	0.83	0.954	2765	65	70	71	0.52	0.66	0.76	0.954
0.75	1	2790	71	74	74	0.7	0.8	0.87	1.77	2830	67	71.5	73.5	0.6	0.71	0.8	1.77
1.5	2	2750	79	79.5	77	0.72	0.84	0.88	3.36	2790	77	78.5	78.5	0.62	0.77	0.84	3.16
3	4	2800	82	82.5	81.5	0.61	0.74	0.81	6.9	2845	80	81.5	81.5	0.5	0.64	0.74	6.92
4	5.5	2850	81.5	82.5	82	0.77	0.84	0.88	8.42	2890	80.3	82	82.5	0.68	0.78	0.84	8.03
5.5	7.5	2860	87	87.5	87.2	0.83	0.89	0.91	10.5	2880	86	87.5	87.7	0.77	0.85	0.89	9.8
7.5	10	2850	86.5	87	87	0.66	0.79	0.85	15.4	2885	85	87	87	0.53	0.67	0.76	15.8
IV pole - 1500rpm																	
0.12	0.16	1360	47	55	57	0.53	0.65	0.76	0.421	1385	42	51	55	0.45	0.57	0.67	0.457
0.18	0.25	1340	46	54	58	0.54	0.67	0.79	0.597	1370	43	52	56	0.45	0.57	0.68	0.658
0.25	0.33	1280	50	55	56	0.55	0.7	0.8	0.848	1320	43	51	55	0.45	0.58	0.7	0.903
0.37	0.5	1300	57	60	62	0.52	0.67	0.78	1.162	1340	52	57	60	0.44	0.55	0.68	1.262
0.55	0.75	1400	61	68	68.2	0.61	0.75	0.86	1.425	1415	58.5	66	67.6	0.51	0.67	0.79	1.433
0.75	1	1380	65	71.5	72	0.61	0.75	0.84	1.884	1405	61	68.4	71	0.5	0.64	0.76	1.934
1.1	1.5	1405	73	76	76.5	0.62	0.75	0.83	2.632	1425	67	75	77	0.49	0.64	0.75	2.65
1.5	2	1400	78.5	79	79	0.65	0.78	0.86	3.354	1415	74.5	78	79	0.52	0.67	0.77	3.431
2.2	3	1400	80.5	81	80.5	0.67	0.79	0.85	4.885	1420	79	81	81.5	0.55	0.68	0.78	4.815
3	4	1390	81.5	82	81.9	0.64	0.77	0.84	6.625	1410	78	81	82.6	0.52	0.67	0.78	6.478
4	5.5	1430	84.3	85	84.5	0.71	0.81	0.86	8.36	1445	82	84	85	0.59	0.72	0.8	8.18
5.5	7.5	1445	85.5	86	85.6	0.7	0.81	0.86	11.4	1455	83.2	85	85.7	0.58	0.72	0.81	11
7.5	10	1450	86.5	86.8	86.8	0.71	0.82	0.87	15.1	1455	83.2	85.7	86.7	0.57	0.72	0.8	15
9.2	12.5	1450	87.3	87.8	87.4	0.7	0.82	0.87	18.4	1455	85.3	87.1	87.5	0.59	0.73	0.82	17.8
HIGH OUTPUT DESIGN																	
0.25	0.33	1405	54	61	63	0.49	0.6	0.7	0.861	1420	49	58	61	0.41	0.51	0.6	0.95
0.55	0.75	1370	69	72	72.5	0.51	0.63	0.72	1.6	1400	62	68	71	0.42	0.53	0.64	1.68
1.1	1.5	1370	68	69	69.5	0.61	0.76	0.86	2.8	1400	60	66	67	0.5	0.65	0.76	3.01
2.2	3	1390	76	77	76	0.65	0.75	0.83	5.3	1420	73	76	76.5	0.53	0.66	0.76	5.26
4	5.5	1380	82	82	81	0.69	0.8	0.85	8.827	1400	81	82.1	82.5	0.6	0.73	0.81	8.327
5.5	7.5	1445	85	86	85.7	0.6	0.72	0.79	12.3	1455	82	85.7	85.7	0.49	0.62	0.71	12.6
7.5	10	1450	86.5	86.8	86.8	0.71	0.82	0.87	15.1	1455	83.2	85.7	86.7	0.57	0.72	0.8	15

Aluminium Frame Motors - Improved Efficiency EFF2

Output		IEC Frame	Full load torque C_n (Nm)	Locked rotor current I_l/I_n	Locked rotor torque T_l/T_n	Break-down torque T_b/T_n	Inertia J kgm²	Allowable locked rotor time Hot/Cold (s)	Weight (kg)	Sound dB (A)	Rated speed (rpm)	400 V						Full load current I_n (A)
												% of full load						
												Efficiency η			Power Factor (Cos φ)			
kW	HP											50	75	100	50	75	100	
VI Pole - 1000 rpm																		
0.12	0.16	63	1.31	2.6	1.7	1.6	0.00051	46/101	6.2	43	855	40.7	46.7	45.5	0.49	0.6	0.71	0.536
0.18	0.25	71	1.94	3.3	2	2.2	0.00079	50/110	7.8	43	905	46	54	57	0.46	0.55	0.62	0.735
0.25	0.33	71	2.58	3.5	2.2	2.2	0.00096	43/95	9.5	43	900	53	60.5	64	0.4	0.5	0.57	0.989
0.37	0.5	80	3.88	3.6	1.7	1.7	0.0019	16/35	10.2	43	905	55	60	63	0.5	0.64	0.75	1.13
0.55	0.75	80	5.66	4.5	2.3	2.3	0.00311	10/22	12.3	43	930	60	65	67	0.5	0.63	0.73	1.62
0.75	1	90S/L	7.72	4.2	1.9	2	0.00448	16/35	15.9	45	910	71	73	72.4	0.55	0.69	0.79	1.89
1.1	1.5	90S/L	11.39	4.8	2.7	2.7	0.00616	9/20	18.9	45	925	72.5	74	72.5	0.47	0.6	0.72	3.042
1.5	2	100L	15.44	4.1	2	2.2	0.00897	17/37	21.1	44	910	74.5	77.5	76	0.51	0.65	0.73	3.902
2.2	3	112M	22.42	5	2.2	2.3	0.01682	14/31	34.5	48	940	77.5	80.5	80.1	0.53	0.66	0.74	5.36
3	4	132S	29.27	5.3	2	2.2	0.03489	20/44	40.2	52	960	80	82.7	82.5	0.58	0.7	0.77	6.82
4	5.5	132M	40.24	5.8	2.3	2.4	0.04458	19/42	48.9	52	960	81.5	83.6	84.2	0.54	0.66	0.74	9.27
5.5	7.5	132M	54.87	6.4	2.7	2.8	0.05814	15/33	58.2	52	960	82.5	84.8	85.8	0.49	0.62	0.71	13
HIGH-OUTPUT DESIGN																		
3	4	112M	29.27	6.3	2.6	2.6	0.02617	10/22	39.7	48	960	78.5	81.7	84	0.53	0.65	0.73	7.06
VIII Pole - 750 rpm																		
0.12	0.16	71	1.7	2.2	2.1	2	0.00079	84/185	8.9	41	660	36.3	43.4	45.6	0.37	0.45	0.53	0.717
0.18	0.25	80	2.53	2.8	2.2	2.4	0.00208	29/64	10.5	42	695	36.2	44.1	48.6	0.45	0.53	0.62	0.862
0.25	0.33	80	3.31	3.5	2.3	2.2	0.00277	24/53	12	42	700	46.1	53.6	56.6	0.42	0.52	0.61	1.045
0.37	0.5	90S/L	5.13	3	1.9	1.8	0.00392	32/70	14.8	43	685	50.6	56.5	57.4	0.44	0.55	0.64	1.454
0.55	0.75	90S/L	7.8	3.3	1.9	2	0.00561	25/55	17.8	43	675	58	60	60	0.43	0.56	0.66	2.005
0.75	1	100L	9.96	3.5	1.8	2.4	0.00785	33/73	19.5	50	705	62	67.2	67.8	0.42	0.53	0.62	2.575
1.1	1.5	100L	15.05	4	1.7	2.3	0.01177	27/59	25.6	50	700	69.3	72.3	71.2	0.45	0.57	0.66	3.379
1.5	2	112M	20.07	4.2	2.2	2.2	0.01776	26/57	31.8	46	700	73.7	75.4	73.5	0.48	0.61	0.7	4.208
2.2	3	132S	29.68	6.1	2.5	2.8	0.06023	22/48	54.3	48	710	75.8	78	77.1	0.55	0.68	0.77	5.349
3	4	132M	39.57	6.1	2.2	2.6	0.07277	18/40	55.7	48	710	78.5	80.1	79	0.55	0.68	0.76	7.212

Notes:
**Class "F" insulation with ΔT105K*
Standard voltage, connection and frequency: 220-240V Δ 50Hz *380-415V Δ 50Hz*
380-415V Y 50Hz *660-690V Y 50Hz*
The values shown are subject to change without prior notice. To obtain guaranteed values please access our website.

Aluminium Frame Motors - Improved Efficiency EFF2

Output		380 V								415 V							
		Rated speed (rpm)	% of full load						Full load current I_n (A)	Rated speed (rpm)	% of full load						Full load current I_n (A)
			Efficiency η			Power Factor (Cos φ)					Efficiency η			Power Factor (Cos φ)			
kW	HP		50	75	100	50	75	100			50	75	100	50	75	100	
VI Pole - 1000 rpm																	
0.12	0.16	845	46.2	50.6	47.6	0.52	0.64	0.76	0.504	860	36.2	42.8	43.2	0.48	0.57	0.67	0.577
0.18	0.25	895	49	55.5	57.5	0.49	0.59	0.65	0.732	910	43	52	56.5	0.44	0.52	0.59	0.751
0.25	0.33	890	56	63	65.3	0.44	0.55	0.61	0.954	905	50	58	62.5	0.37	0.46	0.54	1.03
0.37	0.5	890	57	62	65	0.54	0.69	0.8	1.08	910	55	60	62	0.47	0.6	0.72	1.15
0.55	0.75	920	62	65.8	68	0.54	0.67	0.77	1.6	935	58	64	66	0.47	0.59	0.68	1.7
0.75	1	895	70	72	72	0.61	0.75	0.83	1.91	915	70	71	71	0.52	0.66	0.76	1.93
1.1	1.5	915	73.2	76.4	75.6	0.52	0.67	0.77	2.871	930	71.3	71.4	72.5	0.42	0.55	0.67	3.15
1.5	2	900	73.6	78.5	79	0.57	0.7	0.77	3.747	920	74.2	75.9	74.2	0.46	0.6	0.69	4.076
2.2	3	930	79	80.8	79.7	0.58	0.7	0.76	5.52	950	76	80.3	80.5	0.5	0.63	0.72	5.28
3	4	955	81	83	82	0.61	0.72	0.79	7.04	965	79	82.5	82.6	0.53	0.66	0.74	6.83
4	5.5	960	82.7	84.2	84	0.58	0.73	0.78	9.28	965	80	82.9	83.9	0.52	0.64	0.72	9.21
5.5	7.5	960	84.2	85.5	85.7	0.56	0.69	0.75	13	965	81	83.7	85.4	0.45	0.57	0.66	13.6
HIGH-OUTPUT DESIGN																	
3	4	955	80	82	83.9	0.59	0.7	0.76	7.15	965	76.5	81.4	84	0.48	0.6	0.69	7.2
VIII Pole - 750 rpm																	
0.12	0.16	650	41	47.1	47.6	0.39	0.48	0.57	0.672	670	32.7	40.3	43.2	0.36	0.43	0.5	0.773
0.18	0.25	690	40.7	47.7	50.6	0.47	0.57	0.66	0.819	700	32.8	41.2	46.1	0.43	0.51	0.59	0.921
0.25	0.33	690	49	55.6	57.2	0.45	0.56	0.65	1.022	700	43.1	51.7	55.6	0.4	0.5	0.58	1.079
0.37	0.5	680	54.4	59	58.3	0.48	0.6	0.69	1.397	690	46.6	53.8	56.1	0.41	0.51	0.61	1.504
0.55	0.75	665	61.7	62	60	0.47	0.6	0.7	1.99	680	54.8	59	59	0.41	0.52	0.62	2.092
0.75	1	695	65.6	69	68	0.46	0.58	0.66	2.539	710	58.3	64.6	66.7	0.39	0.49	0.58	2.697
1.1	1.5	690	72.1	73.6	70.8	0.5	0.62	0.7	3.372	705	66.2	70.7	70.7	0.41	0.53	0.62	3.491
1.5	2	690	75.9	76.2	73.2	0.52	0.65	0.73	4.265	705	71.6	74.2	73.1	0.44	0.57	0.66	4.325
2.2	3	705	77.1	78.3	76.7	0.6	0.73	0.8	5.447	715	74.7	77.5	77.1	0.52	0.65	0.74	5.364
3	4	705	79.7	80.5	78.6	0.6	0.73	0.8	7.249	715	77.1	79.6	79	0.51	0.64	0.73	7.237

Aluminium Frame Motors
Premium Efficiency EFF1

Standard Features:

- Three-phase, multivoltage, IP55, TEFC
- Output: 0.12 up to 11kW
- Frames: 63 up to 132M
- Voltage: 220-240/380-415V (up to 100L)
  380-415/660V (from 112M and up)
- Class “F” insulation (ΔT=80K)
- Continuous duty: S1
- Design N
- Ambient temperature: 40°C, at 1000 m.a.s.l.
- Squirrel cage rotor/Aluminium die cast
- Stainless steel nameplate AISI 316
- Dimensions according to IEC-72
- Performance characteristics according to IEC 34
- Color: RAL 5007

Typical Applications:

- Pumps
- Fans
- Crushers
- Conveyor belts
- Mills
- Centrifugal machines
- Presses
- Elevators
- Packaging equipment
- Grinders and others.

Options Available:

- Non-drive end shaft
- Bearing sealing
- Shaft dimensions to customer requirements
- Canopy for V1 applications
- Special painting
- Space heaters
- Thermal protection (thermistors)
- Class “H” insulation
- Other mounting configurations
- Other modifications, on request

More options available, on request.

Bearings
All 3000rpm and 1500rpm motors are supplied with ball bearings as standard. The bearings are designed to ensure long life of the motor, even under heavy operating conditions.

Fan cover
Steel fan covers for 63 up to 132M frames.

Fan
Made of rigid plastic. Non sparking, non toxic, resistant to environmental conditions, and ensures low noise operation.

Frame
Made of Aluminium with external fins for maximum cooling effect and minimum weight. This line of product is defined as a modern and easy assembly system, allowing change of mounting configuration including rotation of terminal box and/or removal of feet. Due to the material used on the frame construction there is an optimization of the electrical and mechanical designs resulting in an improved efficiency of the set and reduced weight. Resistance to corrosion is another benefit making it suitable for severe environments.

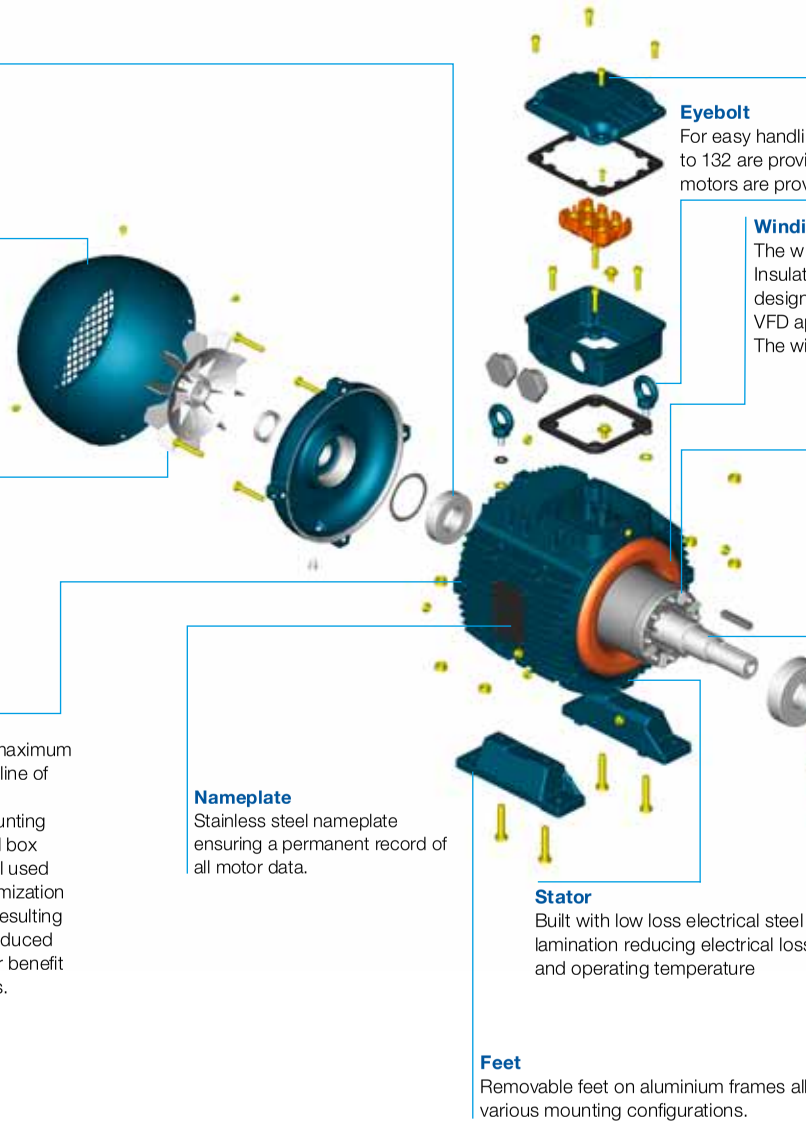

Nameplate
Stainless steel nameplate ensuring a permanent record of all motor data.

Feet
Removable feet on aluminium frames allow various mounting configurations.

Stator
Built with low loss electrical steel lamination reducing electrical losses and operating temperature

Terminal Box
Made of cast iron with plenty of internal space, the teminal box can be rotated at 90º intervals, having one or two threaded holes to connect power supply cables.
* Available as top or side mounted.

Eyebolt
For easy handling, motors in frames 63, up to 132 are provided with an eyebolt. Footless motors are provided with two eyebolts.

Winding
The wire is enameled with class H Varnish Supplied with patented WISE (WEG Insulation System Evolution), which allows three times longer motor lifetime designed to aperating in environments with excess of moisture and suitable for VFD application.
The winding is designed to obtain the minimal Joule losses and temperature rise.

Rotor
High pressure die cast rotor dynamically balanced, thus reducing vibrations.
Built with premium electrical grade steel lamination to improve efficiency.

Shaft
WEG uses SAE/AISI 1040/45 carbon steel as standard, which provides high mechanical strength, preventing bending under load and minimizes fatigue which extends lifetime performance. Specially designed to withstand torques caused during motor acceleration and deceleration.
Upon special design, shaft can have second end.

Endshields
Made of cast iron, they are provided with external fins for better heat dissipation, thus increasing bearing life time.

Drain plugs
Provided with automatic non-corrosive drain plug that quickly drains condensation.

Seals
WEG motors are fitted with either V-ring seals, Oil seals or Lip seals and may also be fitted with Labyrinth Taconite seals or W3Seal to ensure the best possible protection under dusty and high moisture environments.

Aluminium Frame Motors - Premium Efficiency EFF1

Output		IEC Frame	Full load torque C_n (Nm)	Locked rotor current I_l/I_n	Locked rotor torque T_l/T_n	Break-down torque T_b/T_n	Inertia J kgm²	Allowable locked rotor time Hot/Cold (s)	Weight (kg)	Sound dB (A)	Rated speed (rpm)	400 V						Full load current I_n (A)
												% of full load						
												Efficiency η			Power Factor (Cos φ)			
kW	HP											50	75	100	50	75	100	
II Pole - 3000 rpm																		
0.12	0.16	63	5	0.41	2.8	3	0.00012	25/55	5.6	52	2760	58	64.8	65.5	0.51	0.64	0.74	0.357
0.18	0.25	63	4.4	0.64	2.5	2.5	0.00012	30/66	5.6	52	2730	63.5	68.5	69.5	0.62	0.76	0.81	0.462
0.25	0.33	63	4.5	0.85	2.5	2.5	0.00016	18/40	6.1	52	2730	64	68.5	71.2	0.58	0.71	0.8	0.634
0.37	0.5	71	5.5	1.25	3	3.2	0.00037	23/51	8.2	56	2810	69	73.8	74.5	0.63	0.77	0.85	0.843
0.55	0.75	71	5.7	1.89	2.7	2.7	0.00045	16/35	8.8	56	2790	72.5	76.6	76.7	0.68	0.8	0.86	1.2
0.75	1	80	6.8	2.51	3.1	3.1	0.00079	20/44	11.4	59	2795	76.5	80.5	80.5	0.73	0.82	0.86	1.56
1.1	1.5	80	7.8	3.74	3.4	3.4	0.00096	15/33	12.4	59	2820	81	83	83.6	0.64	0.76	0.84	2.26
1.5	2	90S/L	7.3	4.91	2.8	2.8	0.00205	14/31	16.1	62	2860	83.2	84.9	84.5	0.68	0.8	0.85	3.01
2.2	3	90S/L	8.4	7.35	3.7	3.5	0.00266	9/20	18.3	62	2865	84	86	86.6	0.64	0.76	0.83	4.42
3	4	100L	8.9	9.7	3	3.1	0.00672	12/26	26.8	67	2895	84.5	87	88.3	0.73	0.83	0.87	5.64
4	5.5	112M	8.2	13.32	2.7	3.4	0.00842	17/37	36.6	64	2900	87	88.4	88.6	0.72	0.83	0.87	7.49
5.5	7.5	132S	8	17.95	2.7	3.2	0.02056	19/42	54.9	67	2935	88.5	90	90.1	0.71	0.81	0.86	10.2
7.5	10	132S	8	24.01	2.5	2.9	0.0243	13/29	60	67	2925	88.5	90.6	90.8	0.72	0.82	0.87	13.7
9.2	12.5	132M	8.5	29.91	2.8	3.1	0.02804	11/24	74	67	2935	88.5	90.9	91	0.7	0.81	0.87	16.8
IV Pole - 1500 rpm																		
0.12	0.16	63	0.79	4.5	2.6	2.7	0.00045	20/44	6	44	1415	56.5	62.5	64.5	0.43	0.55	0.65	0.413
0.18	0.25	63	1.25	4.6	2.6	2.7	0.00056	27/59	6.5	44	1400	58	64	67.5	0.44	0.55	0.66	0.583
0.25	0.33	71	1.66	5	3	3.1	0.00079	48/106	9.3	43	1400	69	73	75	0.5	0.61	0.69	0.697
0.37	0.5	71	2.52	5	2.7	2.8	0.00079	37/81	9.3	43	1395	69	74	75.5	0.47	0.59	0.69	1.03
0.55	0.75	80	3.68	6	2.6	2.8	0.00242	17/37	11.6	44	1430	72	77	78	0.56	0.69	0.78	1.3
0.75	1	80	4.95	6	2.6	2.6	0.00328	16/35	13.4	44	1420	76	78.6	80.1	0.62	0.75	0.82	1.65
1.1	1.5	90S/L	7.29	7	2.6	3	0.0056	14/31	18.1	49	1445	80	83.8	83.8	0.59	0.72	0.8	2.37
1.5	2	90S/L	9.69	7.5	2.8	3.3	0.00672	12/26	20.2	49	1450	80.5	84.6	85.2	0.54	0.68	0.77	3.3
2.2	3	100L	14.79	7.4	3	3	0.01072	17/37	28.8	53	1425	85.3	86.4	86.4	0.65	0.77	0.83	4.43
3	4	100L	19.65	7.8	2.9	3.3	0.01225	12/26	34.8	53	1430	84.5	86.5	87.5	0.64	0.76	0.83	5.96
4	5.5	112M	26.73	6.6	2.1	2.6	0.01875	12/26	40.3	56	1445	87.1	88.3	88.6	0.66	0.77	0.83	7.85
5.5	7.5	132S	35.96	8.5	2.4	3.1	0.05427	12/26	60.9	56	1465	88	89.6	90.1	0.69	0.79	0.85	10.4
7.5	10	132M	47.95	8.2	2.5	3	0.0659	9/20	68.6	56	1465	89	90	90.4	0.71	0.81	0.86	13.9
9.2	12.5	132M	59.93	8	2.5	3	0.06202	7/15	74	56	1465	88	89.5	90.4	0.68	0.8	0.85	17.281
HIGH-OUTPUT DESIGN																		
7.5	10	132S	47.95	8.2	2.5	3	0.0659	9/20	85	56	1465	89	90	90.4	0.71	0.81	0.86	13.9

Notes:
**Class "F" insulation with ΔT105K*
Standard voltage, connection and frequency: 220-240V Δ 50Hz / 380-415V Δ 50Hz / 380-415V Y 50Hz / 660-690V Y 50Hz
The values shown are subject to change without prior notice. To obtain guaranteed values please access our website.

Aluminium Frame Motors - Premium Efficiency EFF1

Output		380 V								415 V							
		Rated speed (rpm)	% of full load						Full load current I_n (A)	Rated speed (rpm)	% of full load						Full load current I_n (A)
			Efficiency η			Power Factor (Cos φ)					Efficiency η			Power Factor (Cos φ)			
kW	HP		50	75	100	50	75	100			50	75	100	50	75	100	
II Pole - 3000 rpm																	
0.12	0.16	2730	60	66	67	0.56	0.69	0.79	0.344	2790	55	63	63	0.48	0.61	0.71	0.373
0.18	0.25	2700	65	69	69	0.66	0.79	0.83	0.478	2760	62	68	70	0.58	0.73	0.78	0.459
0.25	0.33	2700	65.5	69.5	70	0.62	0.75	0.83	0.654	2755	62.5	67.5	71.9	0.55	0.68	0.77	0.628
0.37	0.5	2790	70.5	73.8	74.3	0.68	0.8	0.88	0.86	2825	67.5	73.8	74.5	0.6	0.74	0.82	0.843
0.55	0.75	2760	73.5	76.7	76.5	0.73	0.82	0.88	1.24	2810	71.5	76.5	76.7	0.64	0.77	0.84	1.19
0.75	1	2770	77	80.5	79.8	0.76	0.85	0.88	1.62	2805	76	80.5	80.5	0.7	0.79	0.84	1.54
1.1	1.5	2800	82	83.2	82.8	0.69	0.8	0.86	2.35	2835	80	82.5	83.5	0.58	0.72	0.81	2.26
1.5	2	2845	83.6	84.8	84.3	0.73	0.83	0.87	3.11	2870	82.8	84.8	84.6	0.64	0.77	0.83	2.97
2.2	3	2855	84.5	86	86	0.69	0.8	0.86	4.52	2875	83.5	86	86.6	0.58	0.72	0.8	4.42
3	4	2890	85	86.7	87.5	0.77	0.85	0.88	5.92	2900	84	86.7	88	0.69	0.81	0.86	5.51
4	5.5	2890	87.5	88.3	88.3	0.77	0.85	0.89	7.73	2910	86.5	88.3	88.5	0.68	0.81	0.86	7.31
5.5	7.5	2930	89	90.3	90.2	0.75	0.83	0.87	10.6	2940	88	89.8	90	0.68	0.78	0.84	10.1
7.5	10	2920	89	90.5	90.6	0.75	0.84	0.88	14.3	2930	88	90.6	90.9	0.7	0.8	0.86	13.3
9.2	12.5	2930	89	91	91	0.76	0.85	0.89	17.3	2940	88	90.8	91	0.66	0.77	0.85	16.5
IV Pole - 1500 rpm																	
0.12	0.16	1405	59	64	65	0.46	0.59	0.69	0.407	1425	54	60.5	63	0.4	0.51	0.61	0.434
0.18	0.25	1390	60	65	67	0.47	0.57	0.68	0.6	1410	56	63	67	0.41	0.53	0.64	0.584
0.25	0.33	1385	70	73.5	74.5	0.54	0.65	0.73	0.698	1415	68	72.5	75.5	0.46	0.58	0.66	0.698
0.37	0.5	1385	71	74.5	75.5	0.51	0.63	0.72	1.03	1405	67	73.5	75	0.43	0.55	0.66	1.04
0.55	0.75	1420	73	77.5	77.5	0.59	0.72	0.81	1.33	1435	71	76.5	78	0.53	0.65	0.75	1.31
0.75	1	1410	77	78.7	79.6	0.66	0.78	0.85	1.68	1425	75	78.5	80.1	0.58	0.71	0.79	1.65
1.1	1.5	1440	81.5	83.8	83.6	0.64	0.76	0.83	2.41	1450	78.5	83.8	83.8	0.55	0.69	0.77	2.37
1.5	2	1440	81.5	84.7	85	0.59	0.73	0.8	3.35	1455	79.5	84.5	85	0.5	0.64	0.74	3.32
2.2	3	1420	85.5	86.3	86.2	0.7	0.81	0.86	4.51	1430	85	86.4	86.4	0.62	0.75	0.81	4.37
3	4	1425	85	86.5	87.5	0.68	0.8	0.85	6.13	1435	84	86.5	87.5	0.6	0.73	0.81	5.89
4	5.5	1440	87.5	88.4	88.3	0.7	0.8	0.86	8	1450	86.7	88.2	88.6	0.62	0.74	0.81	7.75
5.5	7.5	1460	88.5	89.6	90	0.72	0.81	0.86	10.8	1470	87.5	89.4	90.1	0.65	0.77	0.83	10.2
7.5	10	1460	89.2	89.8	89.8	0.75	0.84	0.88	14.4	1465	88.7	89.8	90.3	0.68	0.79	0.85	13.6
9.2	12.5	1460	89	89.5	89.5	0.73	0.83	0.87	17.952	1465	87	89	90.3	0.64	0.76	0.83	17.077
HIGH-OUTPUT DESIGN																	
7.5	10	1460	89.2	89.8	89.8	0.75	0.84	0.88	14.4	1465	88.7	89.8	90.3	0.68	0.79	0.85	13.6

Aluminium Frame Motors - Premium Efficiency EFF1

Output		IEC Frame	Full load torque C_n (Nm)	Locked rotor current I_l/I_n	Locked rotor torque T_l/T_n	Break-down torque T_b/T_n	Inertia J kgm²	Allowable locked rotor time Hot/Cold (s)	Weight (kg)	Sound dB (A)	Rated speed (rpm)	400 V						Full load current I_n (A)
												% of full load						
												Efficiency η			Power Factor (Cos φ)			
kW	HP											50	75	100	50	75	100	
VI Pole - 1000 rpm																		
0.12	0.16	63	1.23	3.5	2.2	2.1	0.00067	41/90	7	43	910	44	52	56.3	0.44	0.53	0.63	0.488
0.18	0.25	71	1.95	3.5	2.1	2.2	0.00079	49/108	9.1	43	900	49	57	61	0.42	0.51	0.6	0.71
0.25	0.33	71	2.58	3.5	2.1	2.2	0.00096	43/95	9.9	43	900	53	63	67	0.39	0.48	0.55	0.979
0.37	0.5	80	3.8	4.7	2.1	2.2	0.00242	14/31	11.4	43	925	62	67.5	70	0.48	0.61	0.7	1.09
0.55	0.75	80	5.73	4.8	2.2	2.4	0.00311	11/24	12.8	43	920	62	68.5	70.3	0.48	0.63	0.72	1.57
0.75	1	90S/L	7.63	4.8	2.1	2.2	0.0056	20/44	18.2	45	920	74	77.7	77.7	0.5	0.63	0.72	1.94
1.1	1.5	90S/L	11.45	5	2.3	2.4	0.00672	12/26	20.4	45	920	72	77.7	77.7	0.48	0.61	0.71	2.88
1.5	2	100L	14.87	5.5	2.2	2.5	0.01289	19/42	25.9	44	945	79	81.5	81.5	0.49	0.6	0.7	3.8
2.2	3	112M	22.18	6.2	2.4	2.6	0.02243	16/35	36.9	48	950	81.5	84	83.8	0.52	0.64	0.72	5.26
3	4	132S	29.27	6	2.1	2.5	0.04264	28/62	59	52	960	82	85	86.5	0.53	0.67	0.74	6.76
4	5.5	132M	40.24	6.5	2.2	2.5	0.05039	21/46	57.7	52	960	85	86.6	87.2	0.56	0.69	0.76	8.71
5.5	7.5	132M	54.59	6.8	2.3	2.5	0.0659	17/37	67.5	52	965	84.5	87.5	87.6	0.53	0.65	0.73	12.4
VIII Pole - 750 rpm																		
0.12	0.16	71	2.5	1.64	1.9	2.1	0.00079	44/97	8.9	41	685	38	46.2	49	0.38	0.47	0.55	0.643
0.18	0.25	80	3.1	2.51	1.8	2	0.00242	16/35	11.1	42	700	42	51	55.8	0.42	0.52	0.61	0.763
0.25	0.33	80	3.5	3.34	2	2	0.00294	15/33	12.4	42	695	51	60	64.3	0.41	0.52	0.61	0.92
0.37	0.5	90S/L	4	5.09	2	2	0.00448	21/46	16.1	43	690	53.5	61.3	64.5	0.39	0.5	0.59	1.4
0.55	0.75	90S/L	4	7.63	2	2.2	0.00616	21/46	19.1	43	690	59	64	66.3	0.39	0.5	0.6	2
0.75	1	100L	4.2	9.89	1.9	2.2	0.01121	38/84	23.9	50	710	71	74.2	76	0.4	0.53	0.61	2.34
1.1	1.5	100L	4.2	15.05	1.8	2.2	0.01289	31/68	24.7	50	700	71	74.5	77	0.4	0.52	0.62	3.33
1.5	2	112M	5.4	19.79	2.4	2.7	0.0243	32/70	38.4	46	710	79	81.3	82	0.43	0.55	0.66	4
2.2	3	132S	6.2	29.68	2.4	2.5	0.07527	25/55	61.8	48	710	82	84.3	84.2	0.54	0.66	0.73	5.17
3	4	132M	6	39.57	2.4	2.4	0.08531	21/46	62.4	48	710	82.8	84.6	84.5	0.54	0.67	0.75	6.83

Notes:
**Class "F" insulation with ΔT105K*
Standard voltage, connection and frequency: 220-240V Δ 50Hz 380-415V Δ 50Hz
380-415V Y 50Hz 660-690V Y 50Hz
The values shown are subject to change without prior notice. To obtain guaranteed values please access our website.

Aluminium Frame Motors - Premium Efficiency EFF1

Output		380 V								415 V							
		Rated speed (rpm)	% of full load						Full load current I_n (A)	Rated speed (rpm)	% of full load						Full load current I_n (A)
			Efficiency η			Power Factor (Cos φ)					Efficiency η			Power Factor (Cos φ)			
kW	HP		50	75	100	50	75	100			50	75	100	50	75	100	
VI Pole - 1000 rpm																	
0.12	0.16	900	47	54	57	0.47	0.56	0.66	0.485	915	41	50	55	0.41	0.5	0.6	0.506
0.18	0.25	890	51	58	61	0.46	0.55	0.63	0.712	910	47	56	61	0.39	0.47	0.57	0.72
0.25	0.33	890	55	64	67	0.4	0.53	0.59	0.961	910	51	62	67	0.37	0.44	0.53	0.979
0.37	0.5	920	64	68.5	70.5	0.52	0.65	0.74	1.08	930	60	66.5	69.5	0.44	0.57	0.66	1.12
0.55	0.75	910	64	69.5	70.5	0.53	0.67	0.76	1.56	930	60	67.5	70	0.44	0.59	0.66	1.66
0.75	1	910	75	77.5	76.8	0.55	0.67	0.74	2.01	930	73	77.7	77.7	0.46	0.6	0.7	1.92
1.1	1.5	910	73	77.5	76.8	0.53	0.65	0.74	2.94	930	71	77.7	77.7	0.44	0.57	0.67	2.94
1.5	2	940	80	81.5	81.5	0.53	0.64	0.72	3.88	950	78	81.5	81.5	0.45	0.57	0.68	3.77
2.2	3	945	82.5	83.5	83.4	0.55	0.67	0.74	5.42	955	80.5	84	84	0.48	0.61	0.7	5.21
3	4	955	83	85.2	86	0.57	0.69	0.76	6.97	965	81	84.8	86.5	0.5	0.64	0.72	6.7
4	5.5	955	85.7	86.8	87	0.6	0.72	0.78	8.96	965	84.3	86.4	87.2	0.52	0.66	0.74	8.62
5.5	7.5	960	85.5	87.6	87.6	0.58	0.7	0.76	12.6	965	83.5	87.4	87.6	0.48	0.61	0.7	12.5
VIII Pole - 750 rpm																	
0.12	0.16	675	42	50	52	0.42	0.5	0.59	0.594	695	34	42	46.5	0.35	0.45	0.52	0.69
0.18	0.25	690	44	53	56	0.44	0.55	0.64	0.763	705	40	49	55.5	0.4	0.49	0.58	0.778
0.25	0.33	685	53	61	63.8	0.43	0.55	0.63	0.945	700	49	59	63.8	0.4	0.5	0.59	0.924
0.37	0.5	680	55	62.5	65	0.42	0.54	0.64	1.35	695	52	60	64	0.37	0.47	0.56	1.44
0.55	0.75	680	61	65	66.5	0.42	0.54	0.64	1.96	700	57	63	66	0.37	0.47	0.57	2.03
0.75	1	700	72	74.4	75.5	0.44	0.56	0.64	2.36	715	70	74	76	0.38	0.5	0.58	2.37
1.1	1.5	690	72.5	75.5	76.9	0.44	0.57	0.65	3.34	710	69.5	73.5	76.9	0.37	0.49	0.59	3.37
1.5	2	700	79.8	81.6	82	0.47	0.59	0.69	4.03	715	78.2	81	81.8	0.4	0.51	0.63	4.05
2.2	3	705	83	84.3	84.2	0.58	0.7	0.75	5.29	715	81	84.3	84.3	0.5	0.63	0.71	5.11
3	4	705	83.2	84.6	84.5	0.58	0.71	0.77	7.01	715	82.5	84.6	84.6	0.51	0.64	0.73	6.76

Aluminium Frame Motors
Top Premium Efficiency Exceeds EFF1

Standard Features:

- Three-phase, multivoltage, IP55, TEFC
- Output: 4 up to 9.2kW
- Frames: 112 up to 132M
- Voltage: 220-240/380-415V (up to 100L)
  380-415/660V (from 112M and up)
- Class “F” insulation (ΔT=80K)
- Continuous duty: S1
- Design N
- Ambient temperature: 40°C, at 1000 m.a.s.l.
- Squirrel cage rotor/Aluminium die cast
- Stainless steel nameplate AISI 316
- Dimensions according to IEC-72
- Performance characteristics according to IEC 34
- Color: RAL 6021

Typical Applications:

- Pumps
- Fans
- Crushers
- Conveyor belts
- Mills
- Centrifugal machines
- Presses
- Elevators
- Packaging equipment
- Grinders and others.

Options Available:

- Non-drive end shaft
- Bearing sealing
- Shaft dimensions to customer requirements
- Canopy for V1 applications
- Special painting
- Space heaters
- Thermal protection (thermistors)
- Class “H” insulation
- Other mounting configurations
- Other modifications, on request

More options available, on request

Bearings
All 3000rpm and 1500rpm motors are supplied with ball bearings as standard. The bearings are designed to ensure long life of the motor, even under heavy operating conditions.

Fan cover
Steel fan covers for 112 up to 132M frames.

Fan
Made of rigid plastic. Non sparking, non toxic, resistant to environmental conditions, and ensures low noise operation.

Frame
Made of Aluminium with external fins for maximum cooling effect and minimum weight. This line of product is defined as a modern and easy assembly system, allowing change of mounting configuration including rotation of terminal box and/or removal of feet. Due to the material used on the frame construction there is an optimization of the electrical and mechanical designs resulting in an improved efficiency of the set and reduced weight. Resistance to corrosion is another benefit making it suitable for severe environments.

Nameplate
Stainless steel nameplate ensuring a permanent record of all motor data.

Feet
Removable feet on aluminium frames allow various mounting configurations.

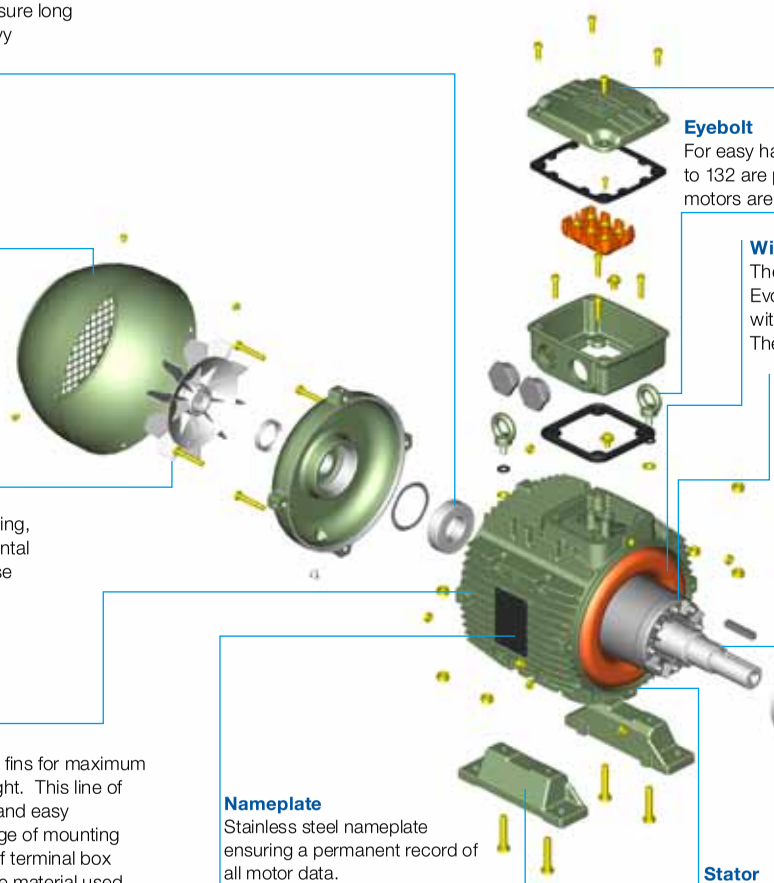

Terminal Box
Made of cast iron with plenty of internal space, the teminal box can be rotated at 90º intervals, having one or two threaded holes to connect power supply cables.
* Available as top or side mounted.

Eyebolt
For easy handling, motors in frames 112 up to 132 are provided with an eyebolt. Footless motors are provided with two eyebolts.

Winding
The wire is enameled with class H Varnish Supplied with patented WISE (WEG Insulation System Evolution), which allows three times longer motor lifetime designed to aperating in environments with excess of moisture and suitable for VFD application.
The winding is designed to obtain the minimal Joule losses and temperature rise.

Rotor
High-pressure die casting aluminium rotor dynamically balanced reducing vibration. The advantages of aluminum rotors are lower inertia, higher starting torque and higher mechanical stiffness, among others. The steel laminations are thermo chemically treated to improve efficiency and minimize mechanical stress.

Shaft
WEG uses SAE/AISI 1040/45 carbon steel as standard, which provides high mechanical strength, preventing bending under load and minimizes fatigue which extends lifetime performance. Specially designed to withstand torques caused during motor acceleration and deceleration. Upon special design, shaft can have second end.

Endshields
Made of cast iron, they are provided with external fins for better heat dissipation, thus increasing bearing life time.

Stator
The stator is built with highest quality of steel lamination and it is thermally and chemically treated to reduce electrical losses and operating temperature.
Guarantees high efficiency and extended motor lifetime.

Drain plugs
Provided with automatic non-corrosive drain plug that quickly drains condensation.

Seals
WEG motors are fitted with either V-ring seals, Oil seals or Lip seals and may also be fitted with Labyrinth Taconite seals or W3Seal to ensure the best possible protection under dusty and high moisture environments.

Aluminium Frame Motors - Top Premium Efficiency Exceeds EFF1

Output		IEC Frame	Full load torque C_n (Nm)	Locked rotor current I_l/I_n	Locked rotor torque T_l/T_n	Break-down torque T_b/T_n	Inertia J kgm²	Allowable locked rotor time Hot/Cold (s)	Weight (kg)	Sound dB (A)	Rated speed (rpm)	400 V						Full load current I_n (A)
												% of full load						
												Efficiency η			Power Factor (Cos φ)			
kW	HP											50	75	100	50	75	100	
II Pole - 3000 rpm																		
4	5.5	112M	13.32	8.5	2.6	3.1	0.00842	21/46	46	64	2900	88.7	89.8	89.8	0.61	0.79	0.85	7.56
5.5	7.5	132S	17.92	8.5	2.5	3	0.02056	19/42	62	67	2940	90.1	91.2	91.3	0.7	0.8	0.85	10.2
7.5	10	132S	23.89	8.5	2.7	3.1	0.02804	8/18	75	67	2940	89	91.3	91.6	0.72	0.83	0.87	13.6
9.2	12.5	132M	29.97	8.5	2.4	2.9	0.0243	8/18	60	67	2930	91.1	92.1	92.3	0.65	0.78	0.85	16.9
IV Pole - 1500 rpm																		
4	5.5	112M	6.6	26.73	2	2.6	0.01875	8/18	49	56	1445	87.4	89.9	89.9	0.66	0.77	0.83	7.738
5.5	7.5	132S	8.5	35.96	2.4	3.1	0.05427	12/26	65	56	1465	88.5	90.1	90.7	0.69	0.79	0.85	10.3
7.5	10	132M	8	47.95	2.5	3	0.0659	7/15	85	56	1465	89	91.1	91.7	0.71	0.81	0.85	13.9

Notes:
**Class "F" insulation with ΔT105K*
Standard voltage, connection and frequency: 220-240V Δ 50Hz *380-415V Δ 50Hz*
380-415V Y 50Hz *660-690V Y 50Hz*
The values shown are subject to change without prior notice. To obtain guaranteed values please access our website.

Aluminium Frame Motors - Top Premium Efficiency Exceeds EFF1

Output		380 V								415 V							
		Rated speed (rpm)	% of full load						Full load current I_n (A)	Rated speed (rpm)	% of full load						Full load current I_n (A)
			Efficiency η			Power Factor (Cos φ)					Efficiency η			Power Factor (Cos φ)			
kW	HP		50	75	100	50	75	100			50	75	100	50	75	100	
II Pole - 3000 rpm																	
4	5.5	2885	88.2	89.4	89.6	0.65	0.83	0.88	7.71	2910	88.2	89.6	89.7	0.58	0.75	0.83	7.47
5.5	7.5	2930	90.3	91.3	91.2	0.72	0.82	0.87	10.5	2950	89.8	91.2	91.3	0.66	0.77	0.83	10.1
7.5	10	2930	89	91.3	91.5	0.76	0.84	0.88	14.2	2945	89	91.3	91.6	0.7	0.8	0.85	13.4
9.2	12.5	2920	91	92	92.2	0.7	0.81	0.87	17.4	2940	91	92	92.2	0.63	0.74	0.83	16.7
IV Pole - 1500 rpm																	
4	5.5	1440	87.5	88.7	88.9	0.7	0.8	0.85	8.043	1450	87.3	89.9	89.9	0.62	0.74	0.81	7.642
5.5	7.5	1460	89	90	90.5	0.72	0.81	0.86	10.7	1470	88	89.9	90.6	0.65	0.77	0.83	10.2
7.5	10	1460	89.5	91	91.5	0.73	0.82	0.86	14.5	1470	88	91	91.7	0.68	0.8	0.84	13.5

Aluminium Frame Motors

Mechanical Data

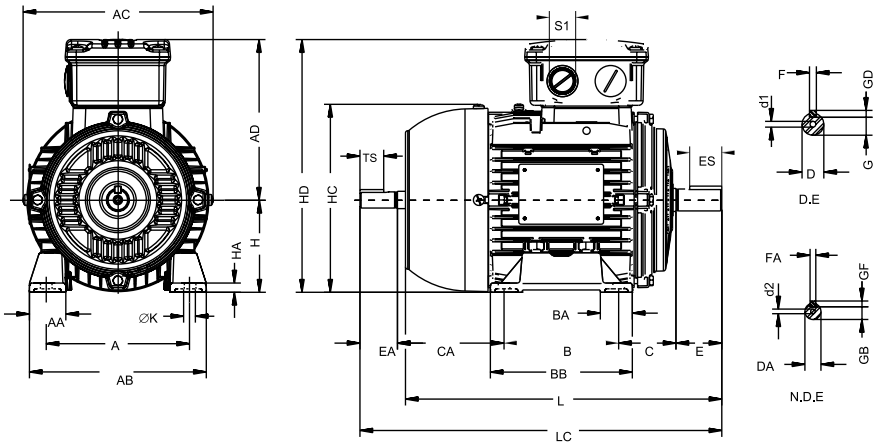

IEC FRAME	A	AA	AB	AC	AD	B	BA	BA'	BB	C	CA	SHAFT DIMENSIONS												H	HA	HC	HD	K	L	LC	S1	d1	d2	BEARINGS	
												D	E	ES	F	G	GD	DA	EA	TS	FA	GB	GF												D.E	N.D.E
63	100	19	116	125	113	80	23	-	95	40	78	11j6	23	14	4	8.5	4	9j6	20	12	3	7.2	3	63	6	124	176	6	216	241	2xM20x1.5	EM4	EM3	6201-ZZ	
71	112	28	134	141	121	90	24.5		108	45	88	14j6	30	18	5	11	5	11j6	23	14	4	8.5	4	71		139	192		248	276		DM5	EM4	6203-ZZ	6202-ZZ
80	125	32	155	159	136	100	28		124	50	93	19j6	40	28	6	15.5	6	14j6	30	18	5	11	5	80	8	157	210	10	276	313		DM6	DM4	6204-ZZ	6203-ZZ
90S/L	140	35	170	179	150	125	24		146	56	129 104	24j6	50	36	8	20	7	16j6	40	28		13		90	9	177	240		330	375	2xM25x1.5	DM8	DM6	6205-ZZ	6204-ZZ
100L	160	40	196	200	160	140	30		170	63	118	28j6	60	45		24		22j6	50	36	6	18.5	6	100	12	198	260	12	376	431		DM10	DM8	6206-ZZ	6205-ZZ
112M	190	46	220	223	180		50			70	128							24j6			8	20	7	112		235	292		393	448	2xM32x1.5			6307-ZZ	6206-ZZ
132S	216	44	248	270	207		40		210	89	150	38k6	80	63	10	33	8	28j6	60	45		24		132		274	339		490	557		DM12	DM10	6308-ZZ	6207-ZZ
132M						178	32																												

*** For frame 100L, 3kW, 4 pole motors, Premium Efficiency Line, the L dimension is 420mm and LC dimension is 475mm.*
All dimensions are in milimeters.
Larger and smaller flanges, on request.
The values shown are subject to change without prior notice.

** This data apply to Aluminium Frame - Improved Efficiency - EFF2 / Premium Efficiency - EFF1 / Top Premium Efficiency – Exceeds EFF1.*

Aluminium Frame Motors

Mechanical Data

"FF" Flange

IEC FRAME	"FF" FLANGE DIMENSIONS									N° OF HOLES
	FLANGE	C	LA	M	N	P	T	S	α	
63	FF-115	40	9	115	95	140	3	10	45°	4
71	FF-130	45		130	110	160	3.5			
80	FF-165	50	10	165	130	200		12		
90S/L		56								
100L	FF-215	63	11	215	180	250	4	15		
112M		70								
132S/M	FF-265	89	12	265	230	300				

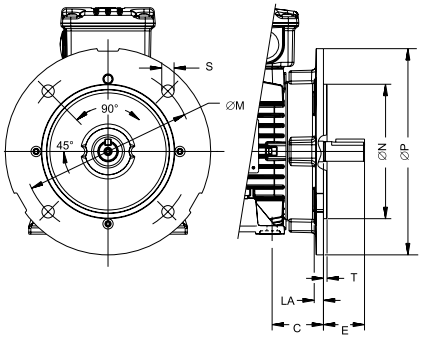

"C" Din Flange

IEC FRAME	"C" DIN FLANGE DIMENSIONS							N° OF HOLES
	FLANGE	C	M	N	P	S	T	
63	C--90	40	75	60	90	M5	2.5	4
71	C-105	45	85	70	105	M6		
80	C-120	50	100	80	120		3	
90S/L	C-140	56	115	95	140	M8		
100L	C-160	63	130	110	160		3.5	
112M		70						
132S/M	C-200	89	165	130	200	M10		

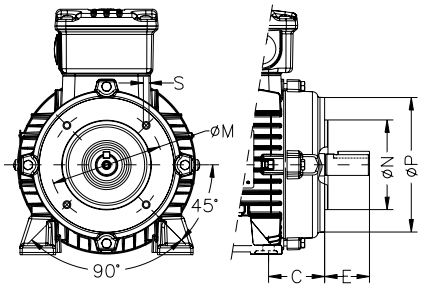

Brake Motors Cast Iron Frame Improved Efficiency EFF2

Standard Features:

- Three-phase, multivoltage, IP55, TEFC
- Output: 0.12 up to 30kW
- Frames: 63 up to 200L
- Voltage: 220-240/380-415V (up to 100L)
  380-415/660V (from 112M and up)
- Class “F” insulation (ΔT=80K)
- Continuous duty: S1
- Design N
- Ambient temperature: 40°C , at 1000 m.a.s.l.
- Squirrel cage rotor/Aluminium die cast
- Ball bearings
- D.E.: V’Ring
- N.D.E.: Lip Seal
- Stainless steel nameplate
- Dimensions according to IEC-72
- Performance characteristics according to IEC 34
- Color: RAL 5007

Options Available:

- Thermal protection
- Space heaters
- Shaft dimensions to customer requirements
- Special finishing paint
- Class “H” insulation
- Other mounting configurations

More options available, on request

Typical Applications:

These motors can be used on any machine that requires quick stops and time savings during installation:

- Packing equipments
- Conveyor belts
- Washing and bottling machines
- Rolling bridges
- Elevators
- Printing machines
- Gates
- Wood machinery
- Cranes and others

Fan Cover
Made of steel plate for frames 63 up to 200L. The fan cover offers higher mechanical strength, corrosion-resistance and extended lifetime. With a design incorporating the braking system it is suitable for operation in severe environments. In addition, it offers quality and performance requirements of the motors such as noise level.

Brake
The electromagnetic brake is built of sturdy construction offering high performance for its low number of movable components and versatility on the application, resulting in extended lifetime and low maintenance. The possibility of having several torques and several power supply voltages makes this set a versatile component.

Fan
WEG has designed the fan having in mind the lowest noise level.
The efficient cooling ensures low motor temperature rise. This minimizes winding losses, thus increasing motor efficiency. Fan is designed with special materials to ensure suitable motor performance in reference to noise level and cooling. The W21 range is supplied with anti-static polypropylene fans from 63 up to 200 frames. Alternatively, aluminium fans can be supplied on request for all frames.

Non-Drive Endshield
The non-drive endshield was specially designed to be coupled to the braking set as well as to withstand high thrusts coming from this set.

Frame
WEG motors are made of FC-200 high-grade cast iron (same density as flameproof motors). The frames are provided with fins aiming at improving the heat dissipation and properly spaced to minimize air blockage due to accumularion of dirt. The motors can be mounted in either horizontal or vertical positions.

Nameplate
Stainless steel nameplate ensuring a permanent record of all motor data.

Terminal Box
Cast iron made with plenty of internal space. The terminal box can be rotated in 90º intervals, having one or two threaded holes to connect the power supply cables. Suitable to take the additional connection of the brake as well as bridge rectifier which is fixed internally without affecting the motor degree of protection. Larger volumes compared to standard motor allow easier connection and disconnection operations of the power supply, bridge rectifier and protection leads.
* Available as top or side mounting.

Winding
The wire is enameled with class H varnish. Supplied with patented WISE (WEG Insulation System Evolution), which allows three times longer motor lifetime designed to operate in environments with excess of moisture and suitable for VFD application.

Rotor
High pressure die cast rotor dynamically balanced, thus reducing vibrations.

Shaft
WEG uses SAE/AISI 1040/45 carbon steel as standard, which provides high mechanical strength, avoiding bending under load and minimizes fatigue which extends lifetime. Specially designed to withstand torques caused during motor acceleration and deceleration.

Bearings
WEG motors are fitted with the highest quality bearings selected from the best manufacturers in the world and designed to ensure long life of the motor even under heavy operating conditions.
WEG also uses the Super-premium Polyrex EM polyurea grease that is specially formulated for electric motor bearings. Its advanced thickener formulation provides low noise characteristics, improved bearing performance and protection.

Endshields
Made of cast iron, they are provided with external fins for better heat dissipation, thus increasing bearing life time.

Stator
Built with low magnetic loss steel lamination to reduce losses and operating temperature.

Seals
WEG motors are fitted with either V-ring seals, Oil seals, Lip seals and may also be fitted with Labyrinth Taconite or W3Seal to ensure the best possible protection under dusty and high moisture environments.

Drain Hole
Provided with plastic drain plug allowing drainage of condensed water.

Brake Motors Cast Iron Frame - Improved Efficiency EFF2

Output		IEC Frame	Full load torque C_n (Nm)	Locked rotor current I_l/I_n	Locked rotor torque T_l/T_n	Break-down torque T_b/T_n	Inertia J kgm²	Allowable locked rotor time Hot/Cold (s)	Weight (kg)	Sound dB (A)	Rated speed (rpm)	400 V						Full load current I_n (A)
												% of full load						
												Efficiency η			Power Factor (Cos φ)			
kW	HP											50	75	100	50	75	100	
II Pole - 3000 rpm																		
0.12	0.16	63	0.41	3.8	2.3	2.3	0.00011	27/59	6.7	52	2720	45.5	53.5	56	0.55	0.68	0.8	0.387
0.18	0.25	63	0.64	4.2	2.4	2.3	0.00013	30/66	6.7	52	2730	50.5	56.5	59	0.55	0.69	0.8	0.55
0.25	0.33	63	0.85	4.3	2.5	2.3	0.00016	25/55	7	52	2720	52	57	60	0.5	0.65	0.76	0.791
0.37	0.5	71	1.29	4.3	2.3	2.3	0.00026	23/51	8.8	56	2730	61.2	66	67.6	0.6	0.75	0.85	0.929
0.55	0.75	71	1.94	4.2	2.5	2.7	0.00034	10/22	9.6	56	2710	67.5	70	70	0.65	0.78	0.87	1.3
0.75	1	80	2.54	5	2.4	2.4	0.00057	9/20	12	59	2770	66	72	73	0.59	0.73	0.82	1.81
1.1	1.5	80	3.8	5	2.6	2.6	0.00079	7/15	13.5	59	2770	74	76.5	76.5	0.6	0.75	0.83	2.5
1.5	2	90S	4.95	6.3	2.7	2.6	0.0017	7/15	18.9	64	2840	77	79.5	79.5	0.63	0.76	0.83	3.28
2.2	3	90L	7.5	6.8	2.8	2.9	0.00218	9/20	21.3	64	2810	78	80	81.5	0.63	0.77	0.85	4.584
3	4	100L	9.79	6.7	2.3	2.8	0.00518	9/20	28.6	67	2870	81.3	83	83.5	0.69	0.81	0.87	5.961
4	5.5	112M	13.44	6.8	2.4	3	0.00728	9/20	39	64	2875	82	84	85	0.71	0.82	0.87	7.81
5.5	7.5	132S	18.1	6.5	2.4	3	0.01589	11/24	54.2	68	2910	83.5	86	86.5	0.71	0.81	0.87	10.5
7.5	10	132S	24.22	6.4	2.3	2.6	0.0187	11/24	66.7	68	2900	86	87.5	87.5	0.72	0.82	0.87	14.2
9.2	12.5	132M	30.17	7.5	2.7	3.1	0.02431	8/18	64.4	68	2910	86.5	88.5	88.5	0.7	0.81	0.86	17.4
11	15	160M	35.96	6.5	2	3	0.0353	11/24	98.1	70	2930	87	88.5	88.8	0.7	0.81	0.86	20.8
15	20	160M	47.86	7.4	2.2	3.1	0.04707	9/20	107.9	70	2935	88	90	90.1	0.69	0.8	0.86	27.9
18.5	25	160L	59.83	8	2.5	3.2	0.05589	7/15	129.3	70	2935	89	90.5	90.7	0.67	0.78	0.86	34.2
22	30	180M	71.55	7.3	2.3	3.2	0.09649	11/24	185.1	70	2945	91	92	92	0.74	0.83	0.87	39.7
30	40	200L	94.92	7.3	2.6	2.9	0.1794	13/29	229.8	74	2960	91	92	92.4	0.7	0.8	0.85	55.1
HIGH-OUTPUT DESIGN																		
0.37	0.5	63	1.28	5.2	3.1	2.9	0.00021	14/31	7.9	52	2740	67	71	71.3	0.57	0.7	0.79	0.948
0.75	1	71	2.5	6.2	3.1	3.1	0.00052	8/18	11.1	56	2810	69	73	74	0.65	0.76	0.84	1.74
1.5	2	80	5.07	6	3	2.7	0.00096	10/22	14.9	59	2770	77	78.5	77.7	0.7	0.82	0.87	3.2
2.2	3	90S	7.5	6.8	2.8	2.9	0.00218	9/20	19	64	2810	78	80	81.5	0.63	0.77	0.85	4.584
3	4	90L*	9.93	6.2	3.2	3.1	0.00266	6/13	21.8	64	2830	81	82	82	0.55	0.68	0.78	6.77
4	5.5	100L	13.46	7.5	2.9	3.1	0.00672	7/15	31.1	67	2870	81	82.3	82.5	0.72	0.81	0.86	8.14
5.5	7.5	112M	18.36	7.7	2.5	3	0.00995	10/22	45.8	64	2870	86.5	87.5	87.5	0.8	0.87	0.9	10.1
7.5	10	112M*	24.47	7.6	3	3	0.00995	6/13	46.3	64	2870	86.5	87.5	87.5	0.59	0.72	0.81	15.3
11	15	132M	36.08	8	2.7	3.2	0.02804	8/18	73.6	68	2920	88	89.5	89.5	0.71	0.81	0.86	20.6
22	30	160L*	71.92	7.5	2.5	3	0.06766	6/13	133.3	70	2930	90	90.6	90.7	0.72	0.82	0.86	40.7
IV Pole - 1500 rpm																		
0.12	0.16	63	0.82	3.5	2	2.2	0.00034	30/66	6.6	44	1375	45	54	57	0.49	0.61	0.72	0.422
0.18	0.25	63	1.29	3.4	2	2.2	0.00039	23/51	6.9	44	1360	46	54	58	0.49	0.63	0.74	0.605
0.25	0.33	71	1.77	3.5	1.9	2.1	0.00039	21/46	8.7	43	1310	50	55	59	0.5	0.65	0.76	0.805
0.55	0.75	80	3.74	4.7	2.1	2.2	0.0019	17/37	12.7	44	1410	58.5	66.3	68	0.54	0.7	0.82	1.424
0.75	1	80	5.04	5	2.3	2.2	0.00225	14/31	13.6	44	1395	64.5	71	72	0.55	0.7	0.81	1.856
1.1	1.5	90S	7.42	5.6	2.3	2.4	0.00392	8/18	18.7	49	1420	70	76	77	0.55	0.69	0.79	2.61
1.5	2	90L	9.96	5.5	2.3	2.4	0.00476	8/18	20.1	49	1410	76.5	78.5	79	0.58	0.73	0.82	3.342
2.2	3	100L	14.94	5.6	2.4	2.6	0.00651	9/20	25.8	53	1410	80.5	81.5	81.5	0.6	0.74	0.82	4.751
3	4	100L	20.07	6	2.8	3	0.00842	8/18	29.4	53	1400	80	81	82.6	0.57	0.72	0.81	6.472
4	5.5	112M	26.83	6.2	2.1	2.5	0.01473	13/29	41.6	56	1440	83.5	84.6	85	0.65	0.77	0.83	8.18
5.5	7.5	132S	36.33	6.5	2.1	2.5	0.03489	11/24	54.5	60	1450	84.5	85.6	86	0.63	0.77	0.84	11
7.5	10	132M	48.27	6.7	2.1	2.9	0.04652	8/18	69	60	1455	85	86.5	87	0.63	0.77	0.84	14.8
9.2	12.5	132M	60.34	7.5	2.2	2.8	0.05815	6/13	69.5	60	1455	86.5	87.7	87.7	0.64	0.78	0.85	17.8
11	15	160M	72.41	6	2.3	2.6	0.07528	12/26	95.8	67	1455	86.5	88.5	88.5	0.62	0.74	0.81	22.1
15	20	160L	96.22	5.8	2.3	2.4	0.10539	12/26	123.9	67	1460	88.5	90	89.7	0.68	0.79	0.83	29.1
18.5	25	180M	119.46	7	2.5	3	0.16146	11/24	171.5	64	1470	89.5	90.5	90.5	0.67	0.77	0.84	35.1
22	30	180L	143.84	7	2.7	2.9	0.18837	11/24	173	64	1465	90	91.5	91.2	0.69	0.8	0.85	41
30	40	200M	190.48	6.7	2.5	2.8	0.30338	14/31	233	69	1475	90.3	91.5	92	0.68	0.78	0.84	56
HIGH-OUTPUT DESIGN																		
0.25	0.33	63	1.64	5	3.1	3.1	0.00067	17/37	8.3	44	1415	52	60	62	0.44	0.54	0.65	0.895
0.37	0.5	71	2.66	3.7	2	2	0.00056	17/37	9.8	43	1320	55	60	62	0.5	0.63	0.76	1.133
0.55	0.75	71	3.8	5	2.8	2.9	0.00096	19/42	11.8	43	1385	66	70.5	72	0.45	0.58	0.68	1.62
1.1	1.5	80	7.61	5	2.3	2.3	0.00328	10/22	16	44	1385	65	68.5	69	0.55	0.7	0.81	2.84
1.5	2	90S	9.96	5.5	2.3	2.4	0.00476	8/18	20.6	49	1410	76.5	78.5	79	0.58	0.73	0.82	3.342
2.2	3	90L	14.94	5.8	2.7	2.5	0.00672	8/18	23.5	49	1410	75	76.5	76.5	0.57	0.71	0.8	5.19
4	5.5	100L*	27.79	6.7	2.6	2.6	0.01072	7/15	34.7	53	1390	81.5	82.2	82	0.64	0.76	0.83	8.483
5.5	7.5	112M*	36.33	6.5	2.5	2.6	0.01875	8/18	46.3	56	1450	84	85.7	85.7	0.54	0.66	0.75	12.4
7.5	10	132S	48.27	6.7	2.1	2.9	0.04652	8/18	62.3	60	1455	85	86.5	87	0.63	0.77	0.84	14.8
11	15	132M/L*	72.41	7.5	2.4	2.7	0.06978	5/11	81.4	60	1455	87	88.4	88	0.7	0.81	0.88	20.5
15	20	160M	96.22	5.8	2.3	2.4	0.10539	12/26	119.3	67	1460	88.5	90	89.7	0.68	0.79	0.83	29.1
18.5	25	160L*	120.69	6	2.4	2.4	0.11542	12/26	130.2	67	1455	88.5	90	90	0.64	0.76	0.82	36.2

Notes:
**Class "F" insulation with ΔT105K*
Standard voltage, connection and frequency: 220-240V Δ 50Hz
380-415V Y 50Hz
380-415V Δ 50Hz
660-690V Y 50Hz
The values shown are subject to change without prior notice. To obtain guaranteed values please access our website.

Brake Motors Cast Iron Frame - Improved Efficiency EFF2

Output		380 V								415 V							
		Rated speed (rpm)	% of full load						Full load current I_n (A)	Rated speed (rpm)	% of full load						Full load current I_n (A)
			Efficiency η			Power Factor (Cos φ)					Efficiency η			Power Factor (Cos φ)			
kW	HP		50	75	100	50	75	100			50	75	100	50	75	100	
II Pole - 3000 rpm																	
0.12	0.16	2690	48	55	58.8	0.59	0.74	0.84	0.369	2735	43	51	53.5	0.52	0.64	0.75	0.416
0.18	0.25	2700	52.5	57.5	59.5	0.6	0.75	0.85	0.541	2750	47.8	54.5	58	0.52	0.64	0.76	0.568
0.25	0.33	2685	54	59	60	0.56	0.71	0.81	0.782	2740	50	55.5	59.9	0.47	0.6	0.72	0.806
0.37	0.5	2700	62.8	66.5	67	0.66	0.81	0.89	0.943	2750	60	65.5	67	0.55	0.7	0.81	0.948
0.55	0.75	2670	68.5	70	69	0.71	0.83	0.9	1.35	2730	65	69	70.1	0.6	0.73	0.84	1.3
0.75	1	2740	69	73	72.5	0.67	0.79	0.86	1.83	2790	63	70.5	72.5	0.51	0.67	0.78	1.85
1.1	1.5	2745	75.5	76.5	76.5	0.68	0.81	0.87	2.51	2790	72	75.5	76.3	0.54	0.7	0.8	2.51
1.5	2	2820	78	80.1	78.9	0.7	0.81	0.87	3.32	2855	75	78.9	79.3	0.57	0.71	0.8	3.29
2.2	3	2790	78.5	80.2	80.8	0.7	0.82	0.88	4.701	2820	77.5	79.8	81.5	0.57	0.72	0.82	4.58
3	4	2855	82.4	83	83	0.75	0.85	0.89	6.17	2880	80.5	82.4	83.5	0.64	0.77	0.84	5.95
4	5.5	2860	83	84.2	84.5	0.77	0.86	0.89	8.08	2885	80.8	83.4	84.8	0.66	0.78	0.85	7.72
5.5	7.5	2895	84.4	86	86	0.77	0.85	0.89	10.9	2915	82.7	85.5	86.5	0.66	0.78	0.84	10.5
7.5	10	2890	86.8	87.5	87	0.78	0.86	0.89	14.7	2910	85	87	87.5	0.66	0.78	0.84	14.2
9.2	12.5	2900	87.4	88.5	88.4	0.76	0.85	0.89	17.8	2915	85.3	88	88.4	0.63	0.76	0.83	17.4
11	15	2915	87.5	88.5	88.5	0.76	0.84	0.87	21.7	2935	85	87.5	88	0.67	0.78	0.84	20.7
15	20	2925	88.5	90	90	0.74	0.83	0.87	29.1	2940	87.5	89.2	89.7	0.64	0.76	0.83	28
18.5	25	2930	89.5	90.5	90.5	0.74	0.83	0.87	35.7	2940	88	90	90.5	0.63	0.75	0.82	34.7
22	30	2935	91.5	92	91.5	0.78	0.85	0.88	41.5	2950	90.5	91.5	92	0.7	0.8	0.85	39.1
30	40	2955	91	92	92.2	0.76	0.84	0.87	56.8	2965	90	91.5	92	0.64	0.76	0.82	55.3
HIGH-OUTPUT DESIGN																	
0.37	0.5	2710	69.5	71.7	71	0.62	0.75	0.83	0.954	2765	65	70	71	0.52	0.66	0.76	0.954
0.75	1	2790	71	74	74	0.7	0.8	0.87	1.77	2830	67	71.5	73.5	0.6	0.71	0.8	1.77
1.5	2	2750	78	78.5	76.5	0.75	0.85	0.89	3.35	2790	76	78.5	78.5	0.65	0.78	0.85	3.13
2.2	3	2790	78.5	80.2	80.8	0.7	0.82	0.88	4.701	2820	77.5	79.8	81.5	0.57	0.72	0.82	4.58
3	4	2800	82	82.5	81.5	0.61	0.74	0.81	6.9	2845	80	81.5	81.5	0.5	0.64	0.74	6.92
4	5.5	2850	81.5	82.5	82	0.77	0.84	0.88	8.42	2890	80.3	82	82.5	0.68	0.78	0.84	8.03
5.5	7.5	2860	87	87.5	87.2	0.83	0.89	0.91	10.5	2880	86	87.5	87.7	0.77	0.85	0.89	9.8
7.5	10	2850	86.5	87	87	0.66	0.79	0.85	15.4	2885	85	87	87	0.53	0.67	0.76	15.8
11	15	2910	88.5	89.5	89	0.76	0.84	0.88	21.3	2930	87.5	89	89.5	0.66	0.77	0.83	20.6
22	30	2925	90.5	90.7	90.5	0.77	0.85	0.88	42	2935	89.5	90.5	90.7	0.68	0.79	0.84	40.2
IV Pole - 1500 rpm																	
0.12	0.16	1360	47	55	57	0.53	0.65	0.76	0.421	1385	42	51	55	0.45	0.57	0.67	0.457
0.18	0.25	1340	46	54	58	0.54	0.67	0.79	0.597	1370	43	52	56	0.45	0.57	0.68	0.658
0.25	0.33	1280	50	55	56	0.55	0.7	0.8	0.848	1320	43	51	55	0.45	0.58	0.7	0.903
0.55	0.75	1400	61	68	68.2	0.61	0.75	0.86	1.425	1415	58.5	66	67.6	0.51	0.67	0.79	1.433
0.75	1	1380	65	71.5	72	0.61	0.75	0.84	1.884	1405	61	68.4	71	0.5	0.64	0.76	1.934
1.1	1.5	1405	73	76	76.5	0.62	0.75	0.83	2.632	1425	67	75	77	0.49	0.64	0.75	2.65
1.5	2	1400	78.5	79	79	0.65	0.78	0.86	3.354	1415	74.5	78	79	0.52	0.67	0.77	3.431
2.2	3	1400	80.5	81	80.5	0.67	0.79	0.85	4.885	1420	79	81	81.5	0.55	0.68	0.78	4.815
3	4	1390	81.5	82	81.9	0.64	0.77	0.84	6.625	1410	78	81	82.6	0.52	0.67	0.78	6.478
4	5.5	1430	84.3	85	84.5	0.71	0.81	0.86	8.36	1445	82	84	85	0.59	0.72	0.8	8.18
5.5	7.5	1445	85.5	86	85.6	0.7	0.81	0.86	11.4	1455	83.2	85	85.7	0.58	0.72	0.81	11
7.5	10	1450	86.5	86.8	86.8	0.71	0.82	0.87	15.1	1455	83.2	85.7	86.7	0.57	0.72	0.8	15
9.2	12.5	1450	87.3	87.8	87.4	0.7	0.82	0.87	18.4	1455	85.3	87.1	87.5	0.59	0.73	0.82	17.8
11	15	1455	87	88.5	88	0.68	0.79	0.83	22.9	1460	85.5	87.5	88	0.57	0.7	0.78	22.3
15	20	1455	89	89.5	89.3	0.72	0.82	0.85	30	1465	88	90	89.7	0.64	0.75	0.82	28.4
18.5	25	1465	90	90.5	90.2	0.71	0.81	0.85	36.7	1470	88.5	90	90.5	0.62	0.74	0.81	35.1
22	30	1460	90.6	91.3	90.7	0.73	0.82	0.86	42.9	1470	89.5	91	91	0.64	0.76	0.82	41
30	40	1470	91	92	91.6	0.73	0.81	0.85	58.5	1475	89.5	91	91.5	0.63	0.75	0.81	56.3
HIGH-OUTPUT DESIGN																	
0.25	0.33	1405	54	61	63	0.49	0.6	0.7	0.861	1420	49	58	61	0.41	0.51	0.6	0.95
0.37	0.5	1300	57	60	62	0.52	0.67	0.78	1.162	1340	52	57	60	0.44	0.55	0.68	1.262
0.55	0.75	1370	69	72	72.5	0.51	0.63	0.72	1.6	1400	62	68	71	0.42	0.53	0.64	1.68
1.1	1.5	1370	68	69	69.5	0.61	0.76	0.86	2.8	1400	60	66	67	0.5	0.65	0.76	3.01
1.5	2	1400	78.5	79	79	0.65	0.78	0.86	3.354	1415	74.5	78	79	0.52	0.67	0.77	3.431
2.2	3	1390	76	77	76	0.65	0.75	0.83	5.3	1420	73	76	76.5	0.53	0.66	0.76	5.26
4	5.5	1380	82	82	81	0.69	0.8	0.85	8.827	1400	81	82.1	82.5	0.6	0.73	0.81	8.327
5.5	7.5	1445	85	86	85.7	0.6	0.72	0.79	12.3	1455	82	85.7	85.7	0.49	0.62	0.71	12.6
7.5	10	1450	86.5	86.8	86.8	0.71	0.82	0.87	15.1	1455	83.2	85.7	86.7	0.57	0.72	0.8	15
11	15	1450	87.5	88.4	88	0.75	0.84	0.89	21.4	1460	86.5	88.4	88.4	0.67	0.79	0.86	20.1
15	20	1455	89	89.5	89.3	0.72	0.82	0.85	30	1465	88	90	89.7	0.64	0.75	0.82	28.4
18.5	25	1450	89	90	89.4	0.7	0.8	0.84	37.4	1460	88	90	90	0.6	0.73	0.8	35.7

Brake Motors Cast Iron Frame - Improved Efficiency EFF2

Output		IEC Frame	Full load torque C_n (Nm)	Locked rotor current I_l/I_n	Locked rotor torque T_l/T_n	Break-down torque T_b/T_n	Inertia J kgm²	Allowable locked rotor time Hot/Cold (s)	Weight (kg)	Sound dB (A)	Rated speed (rpm)	400 V						Full load current I_n (A)
												% of full load						
												Efficiency η			Power Factor (Cos φ)			
kW	HP											50	75	100	50	75	100	
VI Pole - 1000 rpm																		
0.12	0.16	63	1.31	2.6	1.7	1.6	0.00051	46/101	8.1	43	855	40.7	46.7	45.5	0.49	0.6	0.71	0.536
0.18	0.25	71	1.94	3.3	2	2.2	0.00079	50/110	9.6	43	905	46	54	57	0.46	0.55	0.62	0.735
0.25	0.33	71	2.58	3.5	2.2	2.2	0.00096	43/95	11.3	43	900	53	60.5	64	0.4	0.5	0.57	0.989
0.37	0.5	80	3.88	3.6	1.7	1.7	0.0019	16/35	12.6	43	905	55	60	63	0.5	0.64	0.75	1.13
0.55	0.75	80	5.66	4.5	2.3	2.3	0.00311	10/22	14.8	43	930	60	65	67	0.5	0.63	0.73	1.62
0.75	1	90S	7.72	4.2	1.9	2	0.00448	16/35	19.2	45	910	71	73	72.4	0.55	0.69	0.79	1.89
1.1	1.5	90L	11.39	4.8	2.7	2.7	0.00616	9/20	22.4	45	925	72.5	74	72.5	0.47	0.6	0.72	3.042
1.5	2	100L	15.44	4.1	2	2.2	0.00897	17/37	25.8	44	910	74.5	77.5	76	0.51	0.65	0.73	3.902
2.2	3	112M	22.42	5	2.2	2.3	0.01682	14/31	34.5	48	940	77.5	80.5	80.1	0.53	0.66	0.74	5.36
3	4	132S	29.27	5.3	2	2.2	0.03489	20/44	50.7	52	960	80	82.7	82.5	0.58	0.7	0.77	6.82
4	5.5	132M	40.24	5.8	2.3	2.4	0.04458	19/42	57.3	52	960	81.5	83.6	84.2	0.54	0.66	0.74	9.27
5.5	7.5	132M	54.87	6.4	2.7	2.8	0.05814	15/33	66.6	52	960	82.5	84.8	85.8	0.49	0.62	0.71	13
7.5	10	160M	72.79	5.7	2.2	2.5	0.10773	11/24	99.9	56	965	86	87.5	87	0.64	0.76	0.83	15
9.2	12.5	160L	90.98	6	2	2.6	0.12928	10/22	112.6	56	965	86.5	87.5	87	0.63	0.75	0.82	18.6
11	15	160L	109.18	6	2.2	2.6	0.158	11/24	124.5	56	965	87.5	88.5	88	0.65	0.77	0.83	21.7
15	20	180M	144.08	7.5	2.3	2.7	0.26201	7/15	163	56	975	88	89	89	0.76	0.84	0.88	27.6
18.5	25	200L	180.1	6	2.1	2.5	0.34083	11/24	213	58	975	89	90.5	90.2	0.64	0.76	0.82	36.1
22	30	200L	216.12	6	2.3	2.4	0.41258	14/31	234.6	58	975	89	90.9	91.3	0.7	0.79	0.84	41.4
HIGH-OUTPUT DESIGN																		
3	4	112M	29.27	6.3	2.6	2.6	0.02617	10/22	45.8	48	960	78.5	81.7	84	0.53	0.65	0.73	7.06
4	5.5	132S	40.24	5.8	2.3	2.4	0.04458	19/42	59.4	52	960	81.5	83.6	84.2	0.54	0.66	0.74	9.27
VIII Pole - 750 rpm																		
0.12	0.16	71	1.7	2.2	2.1	2	0.00079	84/185	10.7	41	660	36.3	43.4	45.6	0.37	0.45	0.53	0.717
0.18	0.25	80	2.53	2.8	2.2	2.4	0.00208	29/64	12.9	42	695	36.2	44.1	48.6	0.45	0.53	0.62	0.862
0.25	0.33	80	3.31	3.5	2.3	2.2	0.00277	24/53	14.5	42	700	46.1	53.6	56.6	0.42	0.52	0.61	1.045
0.37	0.5	90S	5.13	3	1.9	1.8	0.00392	32/70	18.2	43	685	50.6	56.5	57.4	0.44	0.55	0.64	1.454
0.55	0.75	90L	7.8	3.3	1.9	2	0.00561	25/55	21.3	43	675	58	60	60	0.43	0.56	0.66	2.005
0.75	1	100L	9.96	3.5	1.8	2.4	0.00785	33/73	24.2	50	705	62	67.2	67.8	0.42	0.53	0.62	2.575
1.1	1.5	100L	15.05	4	1.7	2.3	0.01177	27/59	30.2	50	700	69.3	72.3	71.2	0.45	0.57	0.66	3.379
1.5	2	112M	20.07	4.2	2.2	2.2	0.01776	26/57	44.4	46	700	73.7	75.4	73.5	0.48	0.61	0.7	4.208
2.2	3	132S	29.68	6.1	2.5	2.8	0.06023	22/48	67.6	48	710	75.8	78	77.1	0.55	0.68	0.77	5.349
3	4	132M	39.57	6.1	2.2	2.6	0.07277	18/40	75.3	48	710	78.5	80.1	79	0.55	0.68	0.76	7.212
4	5.5	160M	53.29	4.7	2.2	2.4	0.10055	18/40	96.6	51	725	80	82	82	0.5	0.63	0.72	9.78
5.5	7.5	160M	72.66	4.8	2.2	2.3	0.12209	18/40	105.7	51	725	81	83	83.5	0.48	0.62	0.71	13.4
7.5	10	160L	96.88	4.7	2.2	2.3	0.15082	16/35	121.2	51	725	83	85	85.5	0.5	0.64	0.73	17.3
9.2	12.5	180M	120.27	6.7	2.2	2.9	0.23443	11/24	163	51	730	83	86	85.9	0.64	0.75	0.81	19.1
11	15	180L	145.32	6.8	2.3	2.5	0.2758	11/24	164.9	51	725	87	88.5	88.3	0.68	0.79	0.84	21.4
15	20	200L	192.44	4.6	2	2.1	0.3767	23/51	228.7	53	730	86.5	88.6	89	0.56	0.68	0.75	32.4
HIGH-OUTPUT DESIGN																		
7.5	10	160M	96.88	4.7	2.2	2.3	0.15082	16/35	123	51	725	83	85	85.5	0.5	0.64	0.73	17.3

Notes:
**Class "F" insulation with ΔT105K*
Standard voltage, connection and frequency: 220-240V Δ 50Hz *380-415V Δ 50Hz*
380-415V Y 50Hz *660-690V Y 50Hz*
The values shown are subject to change without prior notice. To obtain guaranteed values please access our website.

Brake Motors Cast Iron Frame - Improved Efficiency EFF2

Output		380 V								415 V							
		Rated speed (rpm)	% of full load						Full load current I_n (A)	Rated speed (rpm)	% of full load						Full load current I_n (A)
			Efficiency η			Power Factor (Cos φ)					Efficiency η			Power Factor (Cos φ)			
kW	HP		50	75	100	50	75	100			50	75	100	50	75	100	
VI Pole - 1000 rpm																	
0.12	0.16	845	46.2	50.6	47.6	0.52	0.64	0.76	0.504	860	36.2	42.8	43.2	0.48	0.57	0.67	0.577
0.18	0.25	895	49	55.5	57.5	0.49	0.59	0.65	0.732	910	43	52	56.5	0.44	0.52	0.59	0.751
0.25	0.33	890	56	63	65.3	0.44	0.55	0.61	0.954	905	50	58	62.5	0.37	0.46	0.54	1.03
0.37	0.5	890	57	62	65	0.54	0.69	0.8	1.08	910	55	60	62	0.47	0.6	0.72	1.15
0.55	0.75	920	62	65.8	68	0.54	0.67	0.77	1.6	935	58	64	66	0.47	0.59	0.68	1.7
0.75	1	895	70	72	72	0.61	0.75	0.83	1.91	915	70	71	71	0.52	0.66	0.76	1.93
1.1	1.5	915	73.2	76.4	75.6	0.52	0.67	0.77	2.871	930	71.3	71.4	72.5	0.42	0.55	0.67	3.15
1.5	2	900	73.6	78.5	79	0.57	0.7	0.77	3.747	920	74.2	75.9	74.2	0.46	0.6	0.69	4.076
2.2	3	930	79	80.8	79.7	0.58	0.7	0.76	5.52	950	76	80.3	80.5	0.5	0.63	0.72	5.28
3	4	955	81	83	82	0.61	0.72	0.79	7.04	965	79	82.5	82.6	0.53	0.66	0.74	6.83
4	5.5	960	82.7	84.2	84	0.58	0.73	0.78	9.28	965	80	82.9	83.9	0.52	0.64	0.72	9.21
5.5	7.5	960	84.2	85.5	85.7	0.56	0.69	0.75	13	965	81	83.7	85.4	0.45	0.57	0.66	13.6
7.5	10	960	86	86.5	86	0.69	0.8	0.85	15.6	965	85	86.5	86.5	0.61	0.73	0.8	15.1
9.2	12.5	960	87	87	86.5	0.68	0.79	0.84	19.2	970	86	87.5	87	0.59	0.72	0.8	18.4
11	15	960	88	88	87.5	0.7	0.8	0.85	22.5	970	87	88.6	88.2	0.61	0.74	0.81	21.4
15	20	970	88	88.5	88.5	0.8	0.86	0.89	28.9	975	88	89	89	0.73	0.82	0.87	27
18.5	25	975	89.5	90	90	0.69	0.8	0.84	37.2	980	88	90	90	0.6	0.73	0.8	35.7
22	30	970	89.6	91	91.2	0.74	0.82	0.85	43.1	980	88.4	90.7	91.3	0.66	0.76	0.82	40.9
HIGH-OUTPUT DESIGN																	
3	4	955	80	82	83.9	0.59	0.7	0.76	7.15	965	76.5	81.4	84	0.48	0.6	0.69	7.2
4	5.5	960	82.7	84.2	84	0.58	0.73	0.78	9.28	965	80	82.9	83.9	0.52	0.64	0.72	9.21
VIII Pole - 750 rpm																	
0.12	0.16	650	41	47.1	47.6	0.39	0.48	0.57	0.672	670	32.7	40.3	43.2	0.36	0.43	0.5	0.773
0.18	0.25	690	40.7	47.7	50.6	0.47	0.57	0.66	0.819	700	32.8	41.2	46.1	0.43	0.51	0.59	0.921
0.25	0.33	690	49	55.6	57.2	0.45	0.56	0.65	1.022	700	43.1	51.7	55.6	0.4	0.5	0.58	1.079
0.37	0.5	680	54.4	59	58.3	0.48	0.6	0.69	1.397	690	46.6	53.8	56.1	0.41	0.51	0.61	1.504
0.55	0.75	665	61.7	62	60	0.47	0.6	0.7	1.99	680	54.8	59	59	0.41	0.52	0.62	2.092
0.75	1	695	65.6	69	68	0.46	0.58	0.66	2.539	710	58.3	64.6	66.7	0.39	0.49	0.58	2.697
1.1	1.5	690	72.1	73.6	70.8	0.5	0.62	0.7	3.372	705	66.2	70.7	70.7	0.41	0.53	0.62	3.491
1.5	2	690	75.9	76.2	73.2	0.52	0.65	0.73	4.265	705	71.6	74.2	73.1	0.44	0.57	0.66	4.325
2.2	3	705	77.1	78.3	76.7	0.6	0.73	0.8	5.447	715	74.7	77.5	77.1	0.52	0.65	0.74	5.364
3	4	705	79.7	80.5	78.6	0.6	0.73	0.8	7.249	715	77.1	79.6	79	0.51	0.64	0.73	7.237
4	5.5	720	81	83	82	0.54	0.67	0.75	9.88	725	78.5	82	82.5	0.46	0.6	0.69	9.78
5.5	7.5	720	82	84	83	0.54	0.67	0.74	13.6	725	80	82.5	83	0.45	0.58	0.68	13.6
7.5	10	715	84	85	85	0.56	0.69	0.76	17.6	725	81	84	85.5	0.47	0.6	0.7	17.4
9.2	12.5	725	84	86.1	85.5	0.69	0.79	0.84	19.5	730	82	85.9	85.9	0.59	0.72	0.79	18.9
11	15	720	87.5	88.3	87.8	0.71	0.81	0.85	22.4	730	86.5	88.6	88.5	0.65	0.77	0.83	20.8
15	20	725	87.5	88.9	88.9	0.61	0.72	0.77	33.3	730	85.5	88.3	88.9	0.5	0.64	0.72	32.6
HIGH-OUTPUT DESIGN																	
7.5	10	715	84	85	85	0.56	0.69	0.76	17.6	725	81	84	85.5	0.47	0.6	0.7	17.4

Brake Motors Cast Iron Frame Premium Efficiency EFF1

Standard Features:

- Three-phase, multivoltage, IP55, TEFC
- Output: 0.12 up to 37kW
- Frames: 63 up to 200L
- Voltage: 220-240/380-415V (up to 100L)
  380-415/660V (from 112M and up)
- Class “F” insulation (ΔT=80K)
- Continuous duty: S1
- Design N
- Ambient temperature: 40°C , at 1000 m.a.s.l.
- Squirrel cage rotor/Aluminium die cast
- Ball bearings
- D.E.: V’Ring
- N.D.E.: Lip Seal
- Stainless steel nameplate
- Dimensions according to IEC-72
- Performance characteristics according to IEC 34
- Color: RAL 5009

Options Available:

- Thermal protection
- Space heaters
- Shaft dimensions to customer requirements
- Special finishing paint
- Class “H” insulation
- Other mounting configurations

More options available, on request

Typical Applications:

These motors can be used on any machine that requires quick stops and time savings during installation:

- Packing equipments
- Conveyor belts
- Washing and bottling machines
- Rolling bridges
- Elevators
- Printing machines
- Gates
- Wood machinery
- Cranes and others

Fan Cover
Made of steel plate for frames 63 up to 200L. The fan cover offers higher mechanical strength, corrosion-resistance and extended lifetime. With a design incorporating the braking system it is suitable for operation in severe environments. In addition, it offers quality and performance requirements of the motors such as noise level.

Brake
The electromagnetic brake is built of sturdy construction offering high performance for its low number of movable components and versatility on the application, resulting in extended lifetime and low maintenance. The possibility of having several torques and several power supply voltages makes this set a versatile component.

Terminal Box
Cast iron made with plenty of internal space. The terminal box can be rotated in 90º intervals, having one or two threaded holes to connect the power supply cables. Suitable to take the additional connection of the brake as well as bridge rectifier which is fixed internally without affecting the motor degree of protection. Larger volumes compared to standard motor allow easier connection and disconnection operations of the power supply, bridge rectifier and protection leads.
* Available as top or side mounting.

Winding
The wire is enameled with class H varnish. Supplied with patented WISE (WEG Insulation System Evolution), which allows three times longer motor lifetime designed to operate in environments with excess of moisture and suitable for VFD application. The winding is designed to obtain the minimal Joule losses and temperature rise.

Shaft
WEG uses SAE/AISI 1040/45 carbon steel as standard, which provides high mechanical strength, avoiding bending under load and minimizes fatigue which extends lifetime. Specially designed to withstand torques caused during motor acceleration and deceleration.

Rotor
High pressure die cast rotor dynamically balanced, thus reducing vibrations.

Fan
WEG has designed the fan having in mind the lowest noise level.
The efficient cooling ensures low motor temperature rise. This minimizes winding losses, thus increasing motor efficiency. Fan is designed with special materials to ensure suitable motor performance in reference to noise level and cooling. The W21 range is supplied with anti-static polypropylene fans from 63 up to 200 frames. Alternatively, aluminium fans can be supplied on request for all frames.

Bearings
WEG motors are fitted with the highest quality bearings selected from the best manufacturers in the world and designed to ensure long life of the motor even under heavy operating conditions.
WEG also uses the Super-premium Polyrex EM polyurea grease that is specially formulated for electric motor bearings. Its advanced thickener formulation provides low noise characteristics, improved bearing performance and protection.

Endshields
Made of cast iron, they are provided with external fins for better heat dissipation, thus increasing bearing life time.

Non-Drive Endshield
The non-drive endshield was specially designed to be coupled to the braking set as well as to withstand high thrusts coming from this set.

Stator
Built with low magnetic loss steel lamination to reduce losses and operating temperature.

Seals
WEG motors are fitted with either V-ring seals, Oil seals, Lip seals and may also be fitted with Labyrinth Taconite or W3Seal to ensure the best possible protection under dusty and high moisture environments.

Frame
WEG motors are made of FC-200 high-grade cast iron (same density as flameproof motors). The frames are provided with fins aiming at improving the heat dissipation and properly spaced to minimize air blockage due to accumularion of dirt. The motors can be mounted in either horizontal or vertical positions.

Nameplate
Stainless steel nameplate ensuring a permanent record of all motor data.

Drain Hole
Provided with plastic drain plug allowing drainage of condensed water.

Brake Motors Cast Iron Frame - Premium Efficiency EFF1

Output		IEC Frame	Full load torque C_n (Nm)	Locked rotor current I_l/I_n	Locked rotor torque T_l/T_n	Break-down torque T_b/T_n	Inertia J kgm²	Allowable locked rotor time Hot/Cold (s)	Weight (kg)	Sound dB (A)	Rated speed (rpm)	400 V						Full load current I_n (A)
												% of full load						
												Efficiency η			Power Factor (Cos φ)			
kW	HP											50	75	100	50	75	100	
II Pole - 3000 rpm																		
0.12	0.16	63	0.41	5	2.8	3	0.00012	25/55	6.8	52	2760	58	64.8	65.5	0.51	0.64	0.74	0.357
0.18	0.25	63	0.64	4.4	2.5	2.5	0.00012	30/66	6.9	52	2730	63.5	68.5	69.5	0.62	0.76	0.81	0.462
0.25	0.33	63	0.85	4.5	2.5	2.5	0.00016	18/40	7.3	52	2730	64	68.5	71.2	0.58	0.71	0.8	0.634
0.37	0.5	71	1.25	5.5	3	3.2	0.00037	23/51	10	56	2810	69	73.8	74.5	0.63	0.77	0.85	0.843
0.55	0.75	71	1.89	5.7	2.7	2.7	0.00045	16/35	10.6	56	2790	72.5	76.6	76.7	0.68	0.8	0.86	1.2
0.75	1	80	2.51	6.8	3.1	3.1	0.00079	20/44	13.8	59	2795	76.5	80.5	80.5	0.73	0.82	0.86	1.56
1.1	1.5	80	3.74	7.8	3.4	3.4	0.00096	15/33	14.9	59	2820	81	83	83.6	0.64	0.76	0.84	2.26
1.5	2	90S	4.91	7.3	2.8	2.8	0.00205	14/31	19.4	62	2860	83.2	84.9	84.5	0.68	0.8	0.85	3.01
2.2	3	90L	7.35	8.4	3.7	3.5	0.00266	9/20	21.8	62	2865	84	86	86.6	0.64	0.76	0.83	4.42
3	4	100L	9.7	8.9	3	3.1	0.00672	11/26	31.4	67	2895	84.5	87	88.3	0.73	0.83	0.87	5.64
4	5.5	112M	13.32	8.2	2.7	3.4	0.00842	17/37	42.7	64	2900	87	88.4	88.6	0.72	0.83	0.87	7.49
5.5	7.5	132S	17.95	8	2.7	3.2	0.02056	19/42	60.9	67	2935	88.5	90	90.1	0.71	0.81	0.86	10.2
7.5	10	132S	24.01	8	2.5	2.9	0.0243	13/29	66	67	2925	88.5	90.6	90.8	0.72	0.82	0.87	13.7
11	15	160M	35.72	8.5	2.8	3.3	0.05295	14/31	114.7	70	2950	90	91.9	92.3	0.7	0.8	0.85	20.2
15	20	160M	47.7	8.2	2.4	3.3	0.05883	11/26	120.5	70	2945	91	92	92.5	0.74	0.82	0.86	27.2
18.5	25	160L	59.63	8.8	2.5	3.2	0.06766	10/22	133.7	70	2945	91.9	92.8	93.1	0.73	0.82	0.85	33.7
22	30	180M	71.43	8.6	2.7	3.3	0.11919	14/31	189.4	70	2950	92.5	93.5	93.7	0.76	0.84	0.87	39
30	40	200L	94.92	7.4	2.7	2.8	0.2063	31/68	246.7	74	2960	92.8	93.7	94	0.77	0.84	0.87	52.9
37	50	200L	118.65	7.6	2.7	2.7	0.22424	25/55	257.9	74	2960	93.2	94	94.6	0.76	0.84	0.87	64.9
HIGH-OUTPUT DESIGN																		
5.5	7.5	112M	18.36	7.7	2.5	3	0.00995	10/22	45	64	2870	87.5	88.5	88.6	0.78	0.86	0.89	10.1
9.2	12.5	132M	29.91	8.5	2.8	3.1	0.02804	11/24	73.8	67	2935	88.5	90.9	91	0.7	0.81	0.87	16.8
IV Pole - 1500 rpm																		
0.12	0.16	63	0.79	4.5	2.6	2.7	0.00045	20/44	7.3	44	1415	56.5	62.5	64.5	0.43	0.55	0.65	0.413
0.18	0.25	63	1.25	4.6	2.6	2.7	0.00056	27/59	7.8	44	1400	58	64	67.5	0.44	0.55	0.66	0.583
0.25	0.33	71	1.66	5	3	3.1	0.00079	48/106	11.1	43	1400	69	73	75	0.5	0.61	0.69	0.697
0.37	0.5	71	2.52	5	2.7	2.8	0.00079	37/81	11.1	43	1395	69	74	75.5	0.47	0.59	0.69	1.03
0.55	0.75	80	3.68	6	2.6	2.8	0.00242	17/37	14	44	1430	72	77	78	0.56	0.69	0.78	1.3
0.75	1	80	4.95	6	2.6	2.6	0.00328	16/35	15.9	44	1420	76	78.6	80.1	0.62	0.75	0.82	1.65
1.1	1.5	90S	7.29	7	2.6	3	0.0056	14/31	21.4	49	1445	80	83.8	83.8	0.59	0.72	0.8	2.37
1.5	2	90L	9.69	7.5	2.8	3.3	0.00672	12/26	23.7	49	1450	80.5	84.6	85.2	0.54	0.68	0.77	3.3
2.2	3	100L	14.79	7.4	3	3	0.01072	17/37	32.2	53	1425	85.3	86.4	86.4	0.65	0.77	0.83	4.43
3	4	100L	19.65	7.8	2.9	3.3	0.01225	12/26	39.4	53	1430	84.5	86.5	87.5	0.64	0.76	0.83	5.96
4	5.5	112M	26.73	6.6	2.1	2.6	0.01875	12/26	46.4	56	1445	87.1	88.3	88.6	0.66	0.77	0.83	7.85
5.5	7.5	132S	35.96	8.5	2.4	3.1	0.05427	12/26	66.9	56	1465	88	89.6	90.1	0.69	0.79	0.85	10.4
7.5	10	132M	47.95	8.2	2.5	3	0.0659	9/20	72.4	56	1465	89	90	90.4	0.71	0.81	0.86	13.9
9.2	12.5	160M	60.14	5.6	2.3	2.3	0.08029	27/59	103.6	67	1460	89.6	91	91	0.7	0.8	0.84	17.4
11	15	160M	71.92	6	2.5	2.6	0.10037	19/42	111.3	67	1465	90.3	91.4	91.2	0.68	0.78	0.83	21
15	20	160L	95.89	6.1	2.5	2.6	0.11542	17/37	130	67	1465	90.5	91.9	91.8	0.66	0.77	0.83	28.4
18.5	25	180M	119.46	8	2.9	2.9	0.19733	12/26	188.8	64	1470	91.6	93	93.4	0.65	0.76	0.82	34.9
22	30	180L	142.86	7.9	2.8	2.9	0.23321	16/35	195.3	64	1475	92.5	93.5	93.7	0.71	0.81	0.86	39.4
30	40	200L	190.48	7	2.5	2.6	0.33095	18/40	243.2	69	1475	93	94	93.9	0.67	0.78	0.83	55.6
HIGH-OUTPUT DESIGN																		
2.2	3	90L	14.84	5.8	2.7	2.5	0.00672	8/18	24	49	1420	76.5	79	81	0.55	0.69	0.78	5.026
7.5	10	132S	47.95	8.2	2.5	3	0.05815	9/20	80	56	1465	88.5	90	90.2	0.7	0.81	0.86	14
9.2	12.5	132M	59.93	8	2.5	3	0.06202	7/15	74	56	1465	88	89.5	90.4	0.68	0.8	0.85	17.281
37	50	200L	238.91	6.2	2.1	2.2	0.38611	19/42	260	69	1470	92.5	93	93.2	0.69	0.79	0.83	69.038

Notes:
**Class "F" insulation with ΔT105K*
Standard voltage, connection and frequency: 220-240V Δ 50Hz *380-415V Δ 50Hz*
380-415V Y 50Hz *660-690V Y 50Hz*
The values shown are subject to change without prior notice. To obtain guaranteed values please access our website.

Brake Motors Cast Iron Frame - Premium Efficiency EFF1

Output		380 V								415 V							
		Rated speed (rpm)	% of full load						Full load current I_n (A)	Rated speed (rpm)	% of full load						Full load current I_n (A)
			Efficiency η			Power Factor (Cos φ)					Efficiency η			Power Factor (Cos φ)			
kW	HP		50	75	100	50	75	100			50	75	100	50	75	100	
II Pole - 3000 rpm																	
0.12	0.16	2730	60	66	67	0.56	0.69	0.79	0.344	2790	55	63	63	0.48	0.61	0.71	0.373
0.18	0.25	2700	65	69	69	0.66	0.79	0.83	0.478	2760	62	68	70	0.58	0.73	0.78	0.459
0.25	0.33	2700	65.5	69.5	70	0.62	0.75	0.83	0.654	2755	62.5	67.5	71.9	0.55	0.68	0.77	0.628
0.37	0.5	2790	70.5	73.8	74.3	0.68	0.8	0.88	0.86	2825	67.5	73.8	74.5	0.6	0.74	0.82	0.843
0.55	0.75	2760	73.5	76.7	76.5	0.73	0.82	0.88	1.24	2810	71.5	76.5	76.7	0.64	0.77	0.84	1.19
0.75	1	2770	77	80.5	79.8	0.76	0.85	0.88	1.62	2805	76	80.5	80.5	0.7	0.79	0.84	1.54
1.1	1.5	2800	82	83.2	82.8	0.69	0.8	0.86	2.35	2835	80	82.5	83.5	0.58	0.72	0.81	2.26
1.5	2	2845	83.6	84.8	84.3	0.73	0.83	0.87	3.11	2870	82.8	84.8	84.6	0.64	0.77	0.83	2.97
2.2	3	2855	84.5	86	86	0.69	0.8	0.86	4.52	2875	83.5	86	86.6	0.58	0.72	0.8	4.42
3	4	2890	85	86.7	87.5	0.77	0.85	0.88	5.92	2900	84	86.7	88	0.69	0.81	0.86	5.51
4	5.5	2890	87.5	88.3	88.3	0.77	0.85	0.89	7.73	2910	86.5	88.3	88.5	0.68	0.81	0.86	7.31
5.5	7.5	2930	89	90.3	90.2	0.75	0.83	0.87	10.6	2940	88	89.8	90	0.68	0.78	0.84	10.1
7.5	10	2920	89	90.5	90.6	0.75	0.84	0.88	14.3	2930	88	90.6	90.9	0.7	0.8	0.86	13.3
11	15	2945	90.5	92	92.2	0.74	0.83	0.87	20.8	2955	89.5	91.8	92.2	0.66	0.77	0.83	20
15	20	2940	91.5	92	92.4	0.78	0.85	0.87	28.4	2950	90.5	91.9	92.4	0.7	0.8	0.85	26.6
18.5	25	2940	92.1	92.8	93	0.76	0.84	0.87	34.7	2950	91.7	92.7	93	0.7	0.8	0.83	33.3
22	30	2945	92.8	93.5	93.5	0.79	0.86	0.89	40.2	2955	92.2	93.5	93.7	0.73	0.82	0.85	38.4
30	40	2955	93	93.7	93.8	0.81	0.86	0.88	55.2	2965	92.6	93.7	94.1	0.74	0.82	0.86	51.6
37	50	2955	93.4	94	94.4	0.8	0.86	0.88	67.7	2965	93	94	94.6	0.72	0.82	0.86	63.3
HIGH-OUTPUT DESIGN																	
5.5	7.5	2860	87.7	88.3	88	0.82	0.88	0.9	10.6	2880	87.3	88.5	88.6	0.75	0.84	0.88	9.81
9.2	12.5	2930	89	91	91	0.76	0.85	0.89	17.3	2940	88	90.8	91	0.66	0.77	0.85	16.5
IV Pole - 1500 rpm																	
0.12	0.16	1405	59	64	65	0.46	0.59	0.69	0.407	1425	54	60.5	63	0.4	0.51	0.61	0.434
0.18	0.25	1390	60	65	67	0.47	0.57	0.68	0.6	1410	56	63	67	0.41	0.53	0.64	0.584
0.25	0.33	1385	70	73.5	74.5	0.54	0.65	0.73	0.698	1415	68	72.5	75.5	0.46	0.58	0.66	0.698
0.37	0.5	1385	71	74.5	75.5	0.51	0.63	0.72	1.03	1405	67	73.5	75	0.43	0.55	0.66	1.04
0.55	0.75	1420	73	77.5	77.5	0.59	0.72	0.81	1.33	1435	71	76.5	78	0.53	0.65	0.75	1.31
0.75	1	1410	77	78.7	79.6	0.66	0.78	0.85	1.68	1425	75	78.5	80.1	0.58	0.71	0.79	1.65
1.1	1.5	1440	81.5	83.8	83.6	0.64	0.76	0.83	2.41	1450	78.5	83.8	83.8	0.55	0.69	0.77	2.37
1.5	2	1440	81.5	84.7	85	0.59	0.73	0.8	3.35	1455	79.5	84.5	85	0.5	0.64	0.74	3.32
2.2	3	1420	85.5	86.3	86.2	0.7	0.81	0.86	4.51	1430	85	86.4	86.4	0.62	0.75	0.81	4.37
3	4	1425	85	86.5	87.5	0.68	0.8	0.85	6.13	1435	84	86.5	87.5	0.6	0.73	0.81	5.89
4	5.5	1440	87.5	88.4	88.3	0.7	0.8	0.86	8	1450	86.7	88.2	88.6	0.62	0.74	0.81	7.75
5.5	7.5	1460	88.5	89.6	90	0.72	0.81	0.86	10.8	1470	87.5	89.4	90.1	0.65	0.77	0.83	10.2
7.5	10	1460	89.2	89.8	89.8	0.75	0.84	0.88	14.4	1465	88.7	89.8	90.3	0.68	0.79	0.85	13.6
9.2	12.5	1455	90	91	90.7	0.74	0.82	0.85	18.1	1465	89.2	91	91	0.67	0.78	0.83	16.9
11	15	1460	90.6	91.5	91	0.72	0.81	0.85	21.6	1470	90	91.3	91.3	0.64	0.75	0.81	20.7
15	20	1460	90.9	91.9	91.5	0.7	0.8	0.85	29.3	1470	90.1	91.9	91.8	0.62	0.74	0.81	28.1
18.5	25	1465	91.8	93	93.3	0.7	0.8	0.84	35.9	1475	91.3	92.9	93.3	0.6	0.73	0.8	34.5
22	30	1470	92.8	93.4	93.5	0.75	0.83	0.88	40.6	1475	92.2	93.4	93.7	0.68	0.79	0.85	38.4
30	40	1475	93.5	94.1	93.7	0.71	0.81	0.85	57.2	1480	92.5	93.9	93.8	0.63	0.75	0.81	54.9
HIGH-OUTPUT DESIGN																	
2.2	3	1410	77	79.5	80.5	0.58	0.72	0.8	5.19	1430	75	78	80	0.52	0.66	0.76	5.034
7.5	10	1460	89	90	89.8	0.74	0.83	0.87	14.6	1465	88	89.5	90.3	0.65	0.78	0.84	13.8
9.2	12.5	1460	89	89.5	89.5	0.73	0.83	0.87	17.952	1465	87	89	90.3	0.64	0.76	0.83	17.077
37	50	1465	92.7	92.9	93	0.72	0.81	0.85	71.114	1475	92	93	93.2	0.67	0.77	0.81	68.186

Brake Motors Cast Iron Frame - Premium Efficiency EFF1

Output		IEC Frame	Full load torque C_n (Nm)	Locked rotor current I_l/I_n	Locked rotor torque T_l/T_n	Break-down torque T_b/T_n	Inertia J kgm²	Allowable locked rotor time Hot/Cold (s)	Weight (kg)	Sound dB (A)	Rated speed (rpm)	400 V						Full load current I_n (A)
												% of full load						
												Efficiency η			Power Factor (Cos φ)			
kW	HP											50	75	100	50	75	100	
VI Pole - 1000 rpm																		
0.12	0.16	63	3.5	1.23	2.2	2.1	0.00067	41/90	8	43	910	44	52	56.3	0.44	0.53	0.63	0.488
0.18	0.25	71	3.5	1.95	2.1	2.2	0.00079	49/108	10.8	43	900	49	57	61	0.42	0.51	0.6	0.71
0.25	0.33	71	3.5	2.58	2.1	2.2	0.00096	43/95	11.7	43	900	53	63	67	0.39	0.48	0.55	0.979
0.37	0.5	80	4.7	3.8	2.1	2.2	0.00242	14/31	13.8	43	925	62	67.5	70	0.48	0.61	0.7	1.09
0.55	0.75	80	4.8	5.73	2.2	2.4	0.00311	11/24	15.2	43	920	62	68.5	70.3	0.48	0.63	0.72	1.57
0.75	1	90S	4.8	7.63	2.1	2.2	0.0056	20/44	21.6	45	920	74	77.7	77.7	0.5	0.63	0.72	1.94
1.1	1.5	90L	5	11.45	2.3	2.4	0.00672	12/26	23.9	45	920	72	77.7	77.7	0.48	0.61	0.71	2.88
1.5	2	100L	5.5	14.87	2.2	2.5	0.01289	19/42	30.6	44	945	79	81.5	81.5	0.49	0.6	0.7	3.8
2.2	3	112M	6.2	22.18	2.4	2.6	0.02243	16/35	43	48	950	81.5	84	83.8	0.52	0.64	0.72	5.26
3	4	132S	6	29.27	2.1	2.5	0.04264	28/62	58.9	52	960	82	85	86.5	0.53	0.67	0.74	6.76
4	5.5	132M	6.5	40.24	2.2	2.5	0.05039	21/46	66.1	52	960	85	86.6	87.2	0.56	0.69	0.76	8.71
5.5	7.5	132M	6.8	54.59	2.3	2.5	0.0659	17/37	76	52	965	84.5	87.5	87.6	0.53	0.65	0.73	12.4
7.5	10	160M	6.6	72.41	2.5	2.9	0.14364	19/42	115.4	56	970	87.5	89.5	90	0.61	0.74	0.81	14.8
11	15	160L	7	108.62	2.4	2.7	0.17595	13/29	132.6	56	970	89	90.3	90.3	0.58	0.72	0.79	22.3
15	20	180L	8	144.82	2.7	3	0.28959	9/20	171.9	56	970	91.2	91.9	91.6	0.72	0.81	0.87	27.2
18.5	25	200L	6.3	180.1	2.3	2.5	0.37671	17/37	226.8	58	975	91.3	92.7	92.9	0.67	0.78	0.82	35.1
22	30	200L	6.2	216.12	2.3	2.6	0.44846	15/33	242.5	58	975	91.2	92.6	92.9	0.65	0.75	0.82	41.7
HIGH-OUTPUT DESIGN																		
9.2	12.5	160L	6.2	90.51	2.2	2.7	0.16518	15/33	130	56	970	89.4	90.1	90.1	0.6	0.73	0.8	18.4
VIII Pole - 750 rpm																		
0.12	0.16	71	1.64	2.5	1.9	2.1	0.00079	44/97	11.4	41	685	38	46.2	49	0.38	0.47	0.55	0.643
0.18	0.25	80	2.51	3.1	1.8	2	0.00242	16/35	14.7	42	700	42	51	55.8	0.42	0.52	0.61	0.763
0.25	0.33	80	3.34	3.5	2	2	0.00294	15/33	14.8	42	695	51	60	64.3	0.41	0.52	0.61	0.92
0.37	0.5	90S	5.09	4	2	2	0.00448	21/46	18	43	690	53.5	61.3	64.5	0.39	0.5	0.59	1.4
0.55	0.75	90L	7.63	4	2	2.2	0.00616	21/46	22.5	43	690	59	64	66.3	0.39	0.5	0.6	2
0.75	1	100L	9.89	4.2	1.9	2.2	0.01121	38/84	28.5	50	710	71	74.2	76	0.4	0.53	0.61	2.34
1.1	1.5	100L	15.05	4.2	1.8	2.2	0.01289	31/68	29.2	50	700	71	74.5	77	0.4	0.52	0.62	3.33
1.5	2	112M	19.79	5.4	2.4	2.7	0.0243	32/70	44.4	46	710	79	81.3	82	0.43	0.55	0.66	4
2.2	3	132S	29.68	6.2	2.4	2.5	0.07527	25/55	67.8	48	710	82	84.3	84.2	0.54	0.66	0.73	5.17
3	4	132M	39.57	6	2.4	2.4	0.08531	21/46	73.1	48	710	82.8	84.6	84.5	0.54	0.67	0.75	6.83
4	5.5	160M	53.29	5.2	2.2	2.8	0.12209	27/59	113.1	51	725	83	85.8	86.6	0.44	0.57	0.66	10.1
5.5	7.5	160M	72.16	5.6	2.5	2.8	0.16518	22/48	123.9	51	730	83.5	86.4	87	0.42	0.55	0.65	14
7.5	10	160L	96.88	5.2	2	2.4	0.16518	19/42	133.7	51	725	85.5	88	88.5	0.52	0.64	0.71	17.2
9.2	12.5	180M	121.1	7	2.2	2.7	0.262	12/26	163	51	725	87.5	88.3	88.5	0.67	0.77	0.83	18.1
11	15	180L	145.32	7	2.2	2.4	0.26201	9/20	173.2	51	725	88	89	89	0.68	0.78	0.83	21.5
15	20	200L	192.44	5	2	2.2	0.50227	28/62	262.1	53	730	89.5	90.8	91.5	0.53	0.65	0.71	33.3

Notes:
**Class "F" insulation with ΔT105K*
Standard voltage, connection and frequency: 220-240V Δ 50Hz 380-415V Δ 50Hz
380-415V Y 50Hz 660-690V Y 50Hz
The values shown are subject to change without prior notice. To obtain guaranteed values please access our website.

Brake Motors Cast Iron Frame - Premium Efficiency EFF1

Output		380 V								415 V							
		Rated speed (rpm)	% of full load						Full load current I_n (A)	Rated speed (rpm)	% of full load						Full load current I_n (A)
			Efficiency η			Power Factor (Cos φ)					Efficiency η			Power Factor (Cos φ)			
kW	HP		50	75	100	50	75	100			50	75	100	50	75	100	
VI Pole - 1000 rpm																	
0.12	0.16	900	47	54	57	0.47	0.56	0.66	0.485	915	41	50	55	0.41	0.5	0.6	0.506
0.18	0.25	890	51	58	61	0.46	0.55	0.63	0.712	910	47	56	61	0.39	0.47	0.57	0.72
0.25	0.33	890	55	64	67	0.4	0.53	0.59	0.961	910	51	62	67	0.37	0.44	0.53	0.979
0.37	0.5	920	64	68.5	70.5	0.52	0.65	0.74	1.08	930	60	66.5	69.5	0.44	0.57	0.66	1.12
0.55	0.75	910	64	69.5	70.5	0.53	0.67	0.76	1.56	930	60	67.5	70	0.44	0.59	0.66	1.66
0.75	1	910	75	77.5	76.8	0.55	0.67	0.74	2.01	930	73	77.7	77.7	0.46	0.6	0.7	1.92
1.1	1.5	910	73	77.5	76.8	0.53	0.65	0.74	2.94	930	71	77.7	77.7	0.44	0.57	0.67	2.94
1.5	2	940	80	81.5	81.5	0.53	0.64	0.72	3.88	950	78	81.5	81.5	0.45	0.57	0.68	3.77
2.2	3	945	82.5	83.5	83.4	0.55	0.67	0.74	5.42	955	80.5	84	84	0.48	0.61	0.7	5.21
3	4	955	83	85.2	86	0.57	0.69	0.76	6.97	965	81	84.8	86.5	0.5	0.64	0.72	6.7
4	5.5	955	85.7	86.8	87	0.6	0.72	0.78	8.96	965	84.3	86.4	87.2	0.52	0.66	0.74	8.62
5.5	7.5	960	85.5	87.6	87.6	0.58	0.7	0.76	12.6	965	83.5	87.4	87.6	0.48	0.61	0.7	12.5
7.5	10	965	88	89.7	89.9	0.65	0.77	0.82	15.5	975	87	89.3	90	0.58	0.71	0.79	14.7
11	15	970	89.5	90.5	90.2	0.62	0.76	0.81	22.9	975	88.5	90	90.3	0.54	0.68	0.76	22.3
15	20	970	91.4	91.8	91.4	0.75	0.83	0.89	28	975	91	91.8	91.6	0.7	0.8	0.85	26.8
18.5	25	970	91.8	92.6	92.7	0.72	0.81	0.84	36.1	980	90.8	92.6	92.9	0.64	0.75	0.8	34.6
22	30	970	92	92.9	92.9	0.7	0.78	0.84	42.8	980	90.4	92.2	92.9	0.6	0.72	0.8	41.2
HIGH-OUTPUT DESIGN																	
9.2	12.5	970	90	90.3	90	0.64	0.75	0.81	19.2	975	88.7	89.9	90	0.55	0.71	0.79	18
VIII Pole - 750 rpm																	
0.12	0.16	675	42	50	52	0.42	0.5	0.59	0.594	695	34	42	46.5	0.35	0.45	0.52	0.69
0.18	0.25	690	44	53	56	0.44	0.55	0.64	0.763	705	40	49	55.5	0.4	0.49	0.58	0.778
0.25	0.33	685	53	61	63.8	0.43	0.55	0.63	0.945	700	49	59	63.8	0.4	0.5	0.59	0.924
0.37	0.5	680	55	62.5	65	0.42	0.54	0.64	1.35	695	52	60	64	0.37	0.47	0.56	1.44
0.55	0.75	680	61	65	66.5	0.42	0.54	0.64	1.96	700	57	63	66	0.37	0.47	0.57	2.03
0.75	1	700	72	74.4	75.5	0.44	0.56	0.64	2.36	715	70	74	76	0.38	0.5	0.58	2.37
1.1	1.5	690	72.5	75.5	76.9	0.44	0.57	0.65	3.34	710	69.5	73.5	76.9	0.37	0.49	0.59	3.37
1.5	2	700	79.8	81.6	82	0.47	0.59	0.69	4.03	715	78.2	81	81.8	0.4	0.51	0.63	4.05
2.2	3	705	83	84.3	84.2	0.58	0.7	0.75	5.29	715	81	84.3	84.3	0.5	0.63	0.71	5.11
3	4	705	83.2	84.6	84.5	0.58	0.71	0.77	7.01	715	82.5	84.6	84.6	0.51	0.64	0.73	6.76
4	5.5	725	84	86.2	86.6	0.48	0.61	0.7	10	730	82	85.4	86.6	0.41	0.53	0.63	10.2
5.5	7.5	725	84	86.7	87	0.46	0.6	0.69	13.9	730	83	86.1	87	0.4	0.52	0.62	14.2
7.5	10	720	86.5	88.2	88.5	0.56	0.68	0.74	17.4	725	84.5	87.8	88.5	0.48	0.6	0.69	17.1
9.2	12.5	725	87.8	88.3	88	0.71	0.81	0.85	18.7	730	87.2	88.3	88.6	0.63	0.75	0.81	17.8
11	15	725	88.2	89	88.8	0.73	0.81	0.85	22.1	730	87.8	89	89	0.65	0.75	0.81	21.2
15	20	730	90	91	91.2	0.56	0.67	0.73	34.2	735	89	90.6	91.3	0.5	0.63	0.69	33.1

Brake Motors Cast Iron Frame
Top Premium Efficiency Exceeds EFF1

Standard Features:

- Three-phase, multivoltage, IP55, TEFC
- Output: 4 up to 37kW
- Frames: 112 up to 200L
- Voltage: 220-240/380-415V (up to 100L)
  380-415/660V (from 112M and up)
- Class “F” insulation (ΔT=80K)
- Continuous duty: S1
- Design N
- Ambient temperature: 40°C , at 1000 m.a.s.l.
- Squirrel cage rotor/Aluminium die cast
- Ball bearings
- D.E.: V’Ring
- N.D.E.: Lip Seal
- Stainless steel nameplate
- Dimensions according to IEC-72
- Performance characteristics according to IEC 34
- Color: RAL 6021

Options Available:

- Thermal protection
- Space heaters
- Shaft dimensions to customer requirements
- Special finishing paint
- Class “H” insulation
- Other mounting configurations

More options available, on request

Typical Applications:

These motors can be used on any machine that requires quick stops and time savings during installation:

- Packing equipments
- Conveyor belts
- Washing and bottling machines
- Rolling bridges
- Elevators
- Printing machines
- Gates
- Wood machinery
- Cranes and others

Fan Cover
Made of steel plate for frames 112 up to 200L. The fan cover offers higher mechanical strength, corrosion-resistance and extended lifetime. With a design incorporating the braking system it is suitable for operation in severe environments. In addition, it offers quality and performance requirements of the motors such as noise level.

Brake
The electromagnetic brake is built of sturdy construction offering high performance for its low number of movable components and versatility on the application, resulting in extended lifetime and low maintenance. The possibility of having several torques and several power supply voltages makes this set a versatile component.

Fan
WEG has designed the fan having in mind the lowest noise level.
The efficient cooling ensures low motor temperature rise. This minimizes winding losses, thus increasing motor efficiency. Fan is designed with special materials to ensure suitable motor performance in reference to noise level and cooling. The W21 range is supplied with anti-static polypropylene fans from 112 up to 200 frames. Alternatively, aluminium fans can be supplied on request for all frames.

Non-Drive Endshield
The non-drive endshield was specially designed to be coupled to the braking set as well as to withstand high thrusts coming from this set.

Frame
WEG motors are made of FC-200 high-grade cast iron (same density as flameproof motors). The frames are provided with fins aiming at improving the heat dissipation and properly spaced to minimize air blockage due to accumularion of dirt. The motors can be mounted in either horizontal or vertical positions.

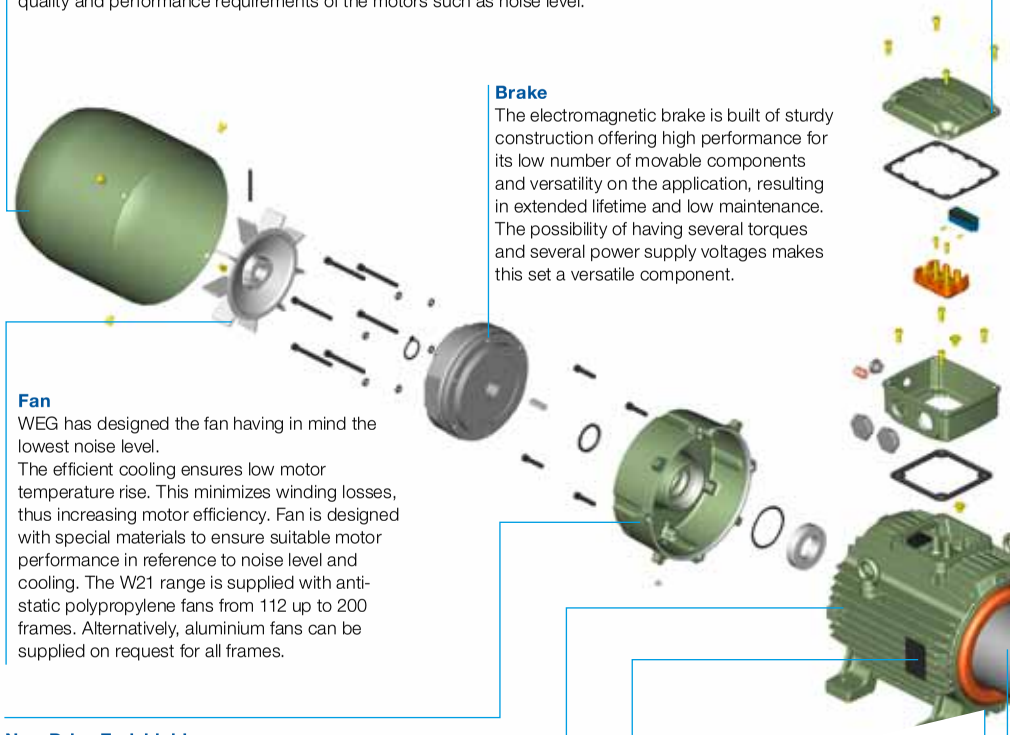

Terminal Box
Cast iron made with plenty of internal space. The terminal box can be rotated in 90° intervals, having one or two threaded holes to connect the power supply cables. Suitable to take the additional connection of the brake as well as bridge rectifier which is fixed internally without affecting the motor degree of protection. Larger volumes compared to standard motor allow easier connection and disconnection operations of the power supply, bridge rectifier and protection leads.
* Available as top or side mounting.

Winding
The wire is enameled with class H Varnish and are impregnated with dipping and baking process (frames 112 up to 200L). Supplied with patented WISE (WEG Insulation System Evolution), which allows three times longer motor lifetime designed to operate in environments with excess of moisture and suitable for VFD application. The winding is designed to obtain the minimal Joule losses and temperature rise.

Shaft
WEG uses SAE/AISI 1040/45 carbon steel as standard, which provides high mechanical strength, avoiding bending under load and minimizes fatigue which extends lifetime. Specially designed to withstand torques caused during motor acceleration and deceleration.

Bearings
WEG motors are fitted with the highest quality bearings selected from the best manufacturers in the world and designed to ensure long life of the motor even under heavy operating conditions.
WEG also uses the Super-premium Polyrex EM polyurea grease that is specially formulated for electric motor bearings. Its advanced thickener formulation provides low noise characteristics, improved bearing performance and protection.

Endshields
Made of cast iron, they are provided with external fins for better heat dissipation, thus increasing bearing life time.

Stator
The stator is built with highest quality of steel lamination and it is thermally and chemically treated to reduce electrical losses and operating temperature. Guarantees high efficiency and extended motor lifetime.

Rotor
High-pressure die casting aluminium rotor dynamically balanced reducing vibration. Advantages of aluminum rotors include lower inertia, higher starting torque and higher mechanical stiffness, among others. The steel laminations are thermally and chemically treated to improve efficiency and minimize mechanical stress.

Seals
WEG motors are fitted with either V-ring seals, Oil seals, Lip seals and may also be fitted with Labyrinth Taconite or W3Seal to ensure the best possible protection under dusty and high moisture environments.

Nameplate
Stainless steel nameplate ensuring a permanent record of all motor data.

Drain Hole
Provided with plastic drain plug allowing drainage of condensed water.

Brake Motors Cast Iron Frame - Top Premium Efficiency Exceeds EFF1

Output		IEC Frame	Full load torque C_n (Nm)	Locked rotor current I_l/I_n	Locked rotor torque T_l/T_n	Break-down torque T_b/T_n	Inertia J kgm²	Allowable locked rotor time Hot/Cold (s)	Weight (kg)	Sound dB (A)	Rated speed (rpm)	400 V						Full load current I_n (A)
												% of full load						
												Efficiency η			Power Factor (Cos φ)			
kW	HP											50	75	100	50	75	100	
II Pole - 3000 rpm																		
4	5.5	112M	13.32	8.5	2.6	3.1	0.00842	21/46	42.6	64	2900	88.7	89.8	89.8	0.61	0.79	0.85	7.56
5.5	7.5	132S	17.92	8.5	2.5	3	0.02056	19/42	65.8	67	2940	90.1	91.2	91.3	0.7	0.8	0.85	10.2
7.5	10	132S	23.89	8.5	2.7	3.1	0.02804	8/18	70.9	67	2940	89	91.3	91.6	0.72	0.83	0.87	13.6
11	15	160M	35.72	8.6	2.3	3	0.05295	12/26	113.9	70	2950	91.7	93	93	0.65	0.78	0.83	20.6
15	20	160M	47.7	8.3	2.4	2.9	0.05883	11/24	120.6	70	2945	92.2	93.3	93.3	0.71	0.81	0.84	27.6
18.5	25	160L	59.63	9	2.3	2.7	0.06766	11/24	131.4	70	2945	92.9	93.8	93.8	0.67	0.79	0.85	33.5
22	30	180M	71.31	8.6	2.8	2.7	0.15082	9/20	189.4	70	2955	93.2	94.3	94.1	0.75	0.83	0.87	38.8
30	40	200L	95.08	7.6	2.7	2.4	0.2063	35/77	246.8	74	2955	92.6	93.9	94.2	0.75	0.83	0.86	53.5
37	50	200L	118.65	8.4	2.6	2.6	0.22424	16/35	251.4	74	2960	93.3	94.2	94.7	0.76	0.84	0.87	64.8
IV Pole - 1500 rpm																		
4	5.5	112M	26.73	6.6	2	2.6	0.01875	8/18	46.6	56	1445	87.4	89.9	89.9	0.66	0.77	0.83	7.738
5.5	7.5	132S	35.96	8.5	2.4	3.1	0.05427	12/26	67.1	56	1465	88.5	90.1	90.7	0.69	0.79	0.85	10.3
7.5	10	132M	47.95	8	2.5	3	0.0659	7/15	100.9	56	1465	89	91.1	91.7	0.71	0.81	0.85	13.9
11	15	160M	71.67	7.5	2.8	3	0.1104	12/26	123.8	67	1470	91.1	92.3	92.6	0.62	0.73	0.8	21.4
15	20	160L	95.89	6.3	2	2.4	0.13048	11/24	138.3	67	1465	91.1	92.4	92.9	0.65	0.76	0.82	28.4
18.5	25	180M	119.46	8.3	2.7	2.8	0.17939	12/26	196.7	64	1470	92.1	93.2	93.6	0.7	0.81	0.85	33.6
22	30	180L	142.86	8.6	2.8	2.9	0.24666	11/24	200.5	64	1475	92.9	94	94.3	0.68	0.78	0.84	40.1
30	40	200L	189.84	7.3	2.7	2.9	0.38611	19/42	268.8	69	1480	94	94.7	94.5	0.65	0.76	0.82	55.9

Notes:
**Class "F" insulation with ΔT105K*
Standard voltage, connection and frequency: 220-240V Δ 50Hz *380-415V Δ 50Hz*
380-415V Y 50Hz *660-690V Y 50Hz*
The values shown are subject to change without prior notice. To obtain guaranteed values please access our website.

Brake Motors Cast Iron Frame - Top Premium Efficiency Exceeds EFF1

Output		380 V								415 V							
		Rated speed (rpm)	% of full load						Full load current I_n (A)	Rated speed (rpm)	% of full load						Full load current I_n (A)
			Efficiency η			Power Factor (Cos φ)					Efficiency η			Power Factor (Cos φ)			
kW	HP		50	75	100	50	75	100			50	75	100	50	75	100	
II Pole - 3000 rpm																	
4	5.5	2885	88.2	89.4	89.6	0.65	0.83	0.88	7.71	2910	88.2	89.6	89.7	0.58	0.75	0.83	7.47
5.5	7.5	2930	90.3	91.3	91.2	0.72	0.82	0.87	10.5	2950	89.8	91.2	91.3	0.66	0.77	0.83	10.1
7.5	10	2930	89	91.3	91.5	0.76	0.84	0.88	14.2	2945	89	91.3	91.6	0.7	0.8	0.85	13.4
11	15	2945	91.6	92.8	92.8	0.72	0.82	0.85	21.2	2955	91.6	93	93.1	0.61	0.74	0.81	20.3
15	20	2940	92.2	93.1	93.1	0.74	0.82	0.85	28.8	2950	92.1	93.2	93.3	0.68	0.8	0.83	26.9
18.5	25	2940	92.9	93.7	93.7	0.7	0.81	0.86	34.9	2950	92.8	93.8	93.8	0.63	0.77	0.84	32.7
22	30	2950	93.3	94.3	94.1	0.78	0.85	0.88	40.4	2955	93	94.2	94	0.72	0.81	0.86	37.9
30	40	2950	92.5	93.9	94.2	0.76	0.84	0.87	55.6	2960	92.6	93.9	94.2	0.74	0.82	0.85	52.1
37	50	2955	93.5	94.3	94.3	0.81	0.86	0.88	67.7	2960	93	94	94.4	0.73	0.82	0.86	63.4
IV Pole - 1500 rpm																	
4	5.5	1440	87.5	88.7	88.9	0.7	0.8	0.85	8.043	1450	87.3	89.9	89.9	0.62	0.74	0.81	7.642
5.5	7.5	1460	89	90	90.5	0.72	0.81	0.86	10.7	1470	88	89.9	90.6	0.65	0.77	0.83	10.2
7.5	10	1460	89.5	91	91.5	0.73	0.82	0.86	14.5	1470	88	91	91.7	0.68	0.8	0.84	13.5
11	15	1465	91	92.2	92.5	0.64	0.75	0.82	22	1475	91	92.2	92.6	0.6	0.7	0.78	21.2
15	20	1460	91.2	92.3	92.8	0.7	0.79	0.84	29.2	1470	91	92.3	92.8	0.6	0.73	0.8	28.1
18.5	25	1465	92	93.2	93.5	0.73	0.84	0.87	34.6	1475	92	93.2	93.6	0.65	0.78	0.84	32.7
22	30	1470	93	94	94.3	0.7	0.8	0.85	41.7	1475	92.5	93.9	94.3	0.66	0.76	0.83	39.1
30	40	1475	94.1	94.6	94.4	0.69	0.79	0.84	57.5	1480	93.8	94.5	94.5	0.6	0.73	0.8	55.2

Brake Motors Aluminium Frame Improved Efficiency EFF2

Standard Features:

- Three-phase, multivoltage, IP55, TEFC
- Output: 0.12 up to 11kW
- Frames: 63 up to 132M
- Voltage: 220-240/380-415V (up to 100L)
  380-415/660V (from 112M and up)
- Class “F” insulation (ΔT=80K)
- Continuous duty: S1
- Design N
- Ambient temperature: 40°C , at 1000 m.a.s.l.
- Squirrel cage rotor/Aluminium die cast
- Ball bearings
- D.E.: V’Ring
- N.D.E.: Lip Seal
- Stainless steel nameplate
- Dimensions according to IEC-72
- Performance characteristics according to IEC 34
- Color: RAL 5007

Options Available:

- Thermal protection
- Space heaters
- Shaft dimensions to customer requirements
- Special finishing paint
- Class “H” insulation
- Other mounting configurations

More options available, on request

Typical Applications:

These motors can be used on any machine that requires quick stops and time savings during installation:

- Packing equipments
- Conveyor belts
- Washing and bottling machines
- Rolling bridges
- Elevators
- Printing machines
- Gates
- Wood machinery
- Cranes and others

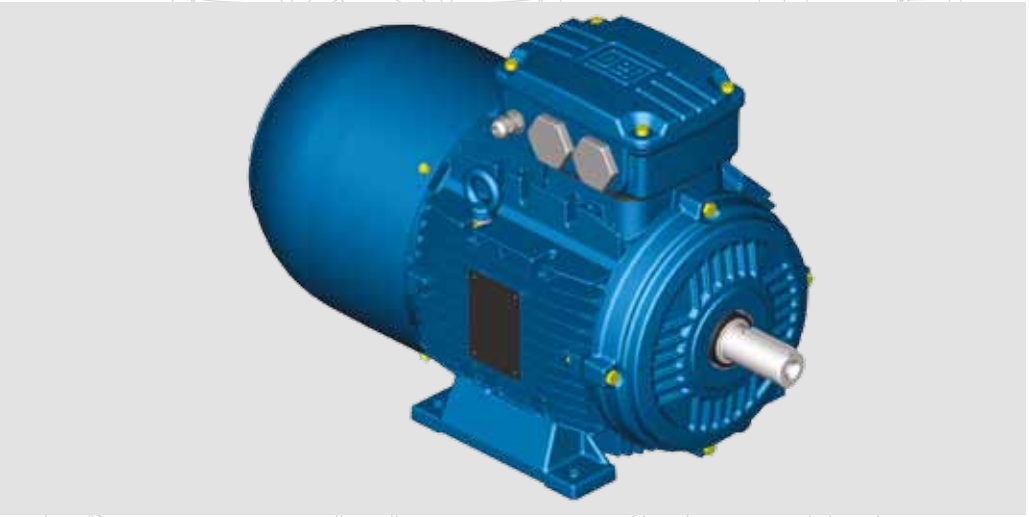

Fan Cover
Made of steel plate for frames 63 up to 132M. The fan cover offers higher mechanical strength, corrosion-resistance and extended lifetime. With a design incorporating the braking system it is suitable for operation in severe environments. In addition, it offers quality and performance requirements of the motors such as noise level.

Terminal Box
Cast iron made with plenty of internal space. The terminal box can be rotated in 90° intervals, having one or two threaded holes to connect the power supply cables. Suitable to take the additional connection of the brake as well as bridge rectifier which is fixed internally without affecting the motor degree of protection. Larger volumes compared to standard motor allow easier connection and disconnection operations of the power supply, bridge rectifier and protection leads.
* Available as top or side mounting.

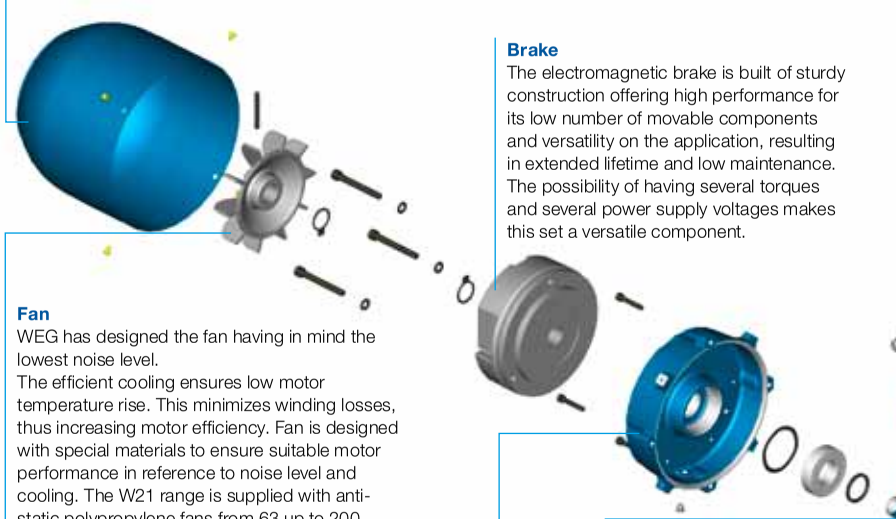

Brake
The electromagnetic brake is built of sturdy construction offering high performance for its low number of movable components and versatility on the application, resulting in extended lifetime and low maintenance. The possibility of having several torques and several power supply voltages makes this set a versatile component.

Winding
The wire is enameled with class H varnish. Supplied with patented WISE (WEG Insulation System Evolution), which allows three times longer motor lifetime designed to operate in environments with excess of moisture and suitable for VFD application.

Shaft
WEG uses SAE/AISI 1040/45 carbon steel as standard, which provides high mechanical strength, avoiding bending under load and minimizes fatigue which extends lifetime. Specially designed to withstand torques caused during motor acceleration and deceleration.

Rotor
High pressure die cast rotor dynamically balanced, thus reducing vibrations.

Fan
WEG has designed the fan having in mind the lowest noise level.
The efficient cooling ensures low motor temperature rise. This minimizes winding losses, thus increasing motor efficiency. Fan is designed with special materials to ensure suitable motor performance in reference to noise level and cooling. The W21 range is supplied with anti-static polypropylene fans from 63 up to 200 frames. Alternatively, aluminium fans can be supplied on request for all frames.

Bearings
WEG motors are fitted with the highest quality bearings selected from the best manufacturers in the world and designed to ensure long life of the motor even under heavy operating conditions.
WEG also uses the Super-premium Polyrex EM polyurea grease that is specially formulated for electric motor bearings. Its advanced thickener formulation provides low noise characteristics, improved bearing performance and protection.

Endshields
Made of cast iron, they are provided with external fins for better heat dissipation, thus increasing bearing life time.

Non-Drive Endshield
The non-drive endshield was specially designed to be coupled to the braking set as well as to withstand high thrusts coming from this set.

Nameplate
Stainless steel nameplate ensuring a permanent record of all motor data.

Seals
WEG motors are fitted with either V-ring seals, Oil seals, Lip seals and may also be fitted with Labyrinth Taconite or W3Seal to ensure the best possible protection under dusty and high moisture environments.

Stator
Built with low magnetic loss steel lamination to reduce losses and operating temperature.

Frame
Made of Aluminium with external fins for maximum cooling effect and minimum weight. This line of product is defined as a modern and easy assembly system, allowing change of mounting configuration including rotation of terminal box and/or removal of feet. Due to the material used on the frame construction there is an optimization of the electrical and mechanical designs resulting in an improved efficiency of the set and reduced weight. Resistance to corrosion is another benefit making it suitable for severe environments.

Feet
Removable feet on aluminium frames allow various mounting configurations.

Drain Hole
Provided with plastic drain plug allowing drainage of condensed water.

Brake Motors Aluminium Frame - Improved Efficiency EFF2

Output		IEC Frame	Full load torque C_n (Nm)	Locked rotor current I_l/I_n	Locked rotor torque T_l/T_n	Break-down torque T_b/T_n	Inertia J kgm²	Allowable locked rotor time Hot/Cold (s)	Weight (kg)	Sound dB (A)	Rated speed (rpm)	400 V						Full load current I_n (A)
												% of full load						
												Efficiency η			Power Factor (Cos φ)			
kW	HP											50	75	100	50	75	100	
II Pole - 3000 rpm																		
0.12	0.16	63	0.41	3.8	2.3	2.3	0.00011	27/59	5.3	52	2720	45.5	53.5	56	0.55	0.68	0.8	0.387
0.18	0.25	63	0.64	4.2	2.4	2.3	0.00013	30/66	5.5	52	2730	50.5	56.5	59	0.55	0.69	0.8	0.55
0.25	0.33	63	0.85	4.3	2.5	2.3	0.00016	25/55	5.8	52	2720	52	57	60	0.5	0.65	0.76	0.791
0.37	0.5	71	1.29	4.3	2.3	2.3	0.00026	23/51	7	56	2730	61.2	66	67.6	0.6	0.75	0.85	0.929
0.55	0.75	71	1.94	4.2	2.5	2.7	0.00034	10/22	7.8	56	2710	67.5	70	70	0.65	0.78	0.87	1.3
0.75	1	80	2.54	5	2.4	2.4	0.00057	9/20	9.6	59	2770	66	72	73	0.59	0.73	0.82	1.81
1.1	1.5	80	3.8	5	2.6	2.6	0.00079	7/15	11	59	2770	74	76.5	76.5	0.6	0.75	0.83	2.5
1.5	2	90S/L	4.95	6.3	2.7	2.6	0.0017	7/15	15.5	64	2840	77	79.5	79.5	0.63	0.76	0.83	3.28
2.2	3	90S/L	7.5	6.8	2.8	2.9	0.00218	9/20	17.8	64	2810	78	80	81.5	0.63	0.77	0.85	4.584
3	4	100L	9.79	6.7	2.3	2.8	0.00518	9/20	24	67	2870	81.3	83	83.5	0.69	0.81	0.87	5.961
4	5.5	112M	13.44	6.8	2.4	3	0.00728	9/20	33	64	2875	82	84	85	0.71	0.82	0.87	7.81
5.5	7.5	132S	18.1	6.5	2.4	3	0.01589	11/24	43.6	68	2910	83.5	86	86.5	0.71	0.81	0.87	10.5
7.5	10	132S	24.22	6.4	2.3	2.6	0.0187	11/24	50	68	2900	86	87.5	87.5	0.72	0.82	0.87	14.2
9.2	12.5	132M	30.17	7.5	2.7	3.1	0.02431	8/18	56	68	2910	86.5	88.5	88.5	0.7	0.81	0.86	17.4
11	15	132M	36.08	8	2.7	3.2	0.02804	8/18	61.3	68	2920	88	89.5	89.5	0.71	0.81	0.86	20.6
HIGH-OUTPUT DESIGN																		
0.37	0.5	63	1.28	5.2	3.1	2.9	0.00021	14/31	6.7	52	2740	67	71	71.3	0.57	0.7	0.79	0.948
0.75	1	71	2.5	6.2	3.1	3.1	0.00052	8/18	9.3	56	2810	69	73	74	0.65	0.76	0.84	1.74
1.5	2	80	5.07	6	3	2.7	0.00096	10/22	12.4	59	2770	78	79	78.2	0.67	0.81	0.86	3.22
3	4	90S/L*	9.93	6.2	3.2	3.1	0.00266	6/13	18.3	64	2830	81	82	82	0.55	0.68	0.78	6.77
4	5.5	100L	13.46	7.5	2.9	3.1	0.00672	7/15	26.7	67	2870	81	82.3	82.5	0.72	0.81	0.86	8.14
5.5	7.5	112M	18.36	7.7	2.5	3	0.00995	10/22	39.8	64	2870	86.5	87.5	87.5	0.8	0.87	0.9	10.1
7.5	10	112M*	24.47	7.6	3	3	0.00995	6/13	40.3	64	2870	86.5	87.5	87.5	0.59	0.72	0.81	15.3
IV Pole - 1500 rpm																		
0.12	0.16	63	0.82	3.5	2	2.2	0.00034	30/66	5.4	44	1375	45	54	57	0.49	0.61	0.72	0.422
0.18	0.25	63	1.29	3.4	2	2.2	0.00039	23/51	6.4	44	1360	46	54	58	0.49	0.63	0.74	0.605
0.25	0.33	71	1.77	3.5	1.9	2.1	0.00039	21/46	6.9	43	1310	50	55	59	0.5	0.65	0.76	0.805
0.37	0.5	71	2.66	3.7	2	2	0.00056	17/37	8	43	1320	55	60	62	0.5	0.63	0.76	1.133
0.55	0.75	80	3.74	4.7	2.1	2.2	0.0019	17/37	10.2	44	1410	58.5	66.3	68	0.54	0.7	0.82	1.424
0.75	1	80	5.04	5	2.3	2.2	0.00225	14/31	11.2	44	1395	64.5	71	72	0.55	0.7	0.81	1.856
1.1	1.5	90S/L	7.42	5.6	2.3	2.4	0.00392	8/18	15.3	49	1420	70	76	77	0.55	0.69	0.79	2.61
1.5	2	90S/L	9.96	5.5	2.3	2.4	0.00476	8/18	16.6	49	1410	76.5	78.5	79	0.58	0.73	0.82	3.342
2.2	3	100L	14.94	5.6	2.4	2.6	0.00651	9/20	21.2	53	1410	80.5	81.5	81.5	0.6	0.74	0.82	4.751
3	4	100L	20.07	6	2.8	3	0.00804	8/18	24.2	53	1400	80	81	82.6	0.57	0.72	0.81	6.472
4	5.5	112M	26.83	6.2	2.1	2.5	0.01473	13/29	35.6	56	1440	83.5	84.6	85	0.65	0.77	0.83	8.18
5.5	7.5	132S	36.33	6.5	2.1	2.5	0.03489	11/24	43.9	60	1450	84.5	85.6	86	0.63	0.77	0.84	11
7.5	10	132M	48.27	6.7	2.1	2.9	0.04458	8/18	50	60	1455	85	86.5	87	0.63	0.77	0.84	14.8
9.2	12.5	132M	60.34	7.5	2.2	2.8	0.05815	6/13	58.5	60	1455	86.5	87.7	87.7	0.64	0.78	0.85	17.8
HIGH-OUTPUT DESIGN																		
0.25	0.33	63	1.64	5	3.1	3.1	0.00067	17/37	7	44	1415	52	60	62	0.44	0.54	0.65	0.895
0.55	0.75	71	3.8	5	2.8	2.9	0.00096	19/42	10	43	1385	66	70.5	72	0.45	0.58	0.68	1.62
1.1	1.5	80	7.61	5	2.3	2.3	0.00315	10/22	12.7	44	1385	65	68.5	69	0.55	0.7	0.81	2.84
2.2	3	90S/L	14.94	5.8	2.7	2.5	0.00672	8/18	20	49	1410	75	76.5	76.5	0.57	0.71	0.8	5.19
4	5.5	100L*	27.79	6.7	2.6	2.6	0.01072	7/15	30.1	53	1390	81.5	82.2	82	0.64	0.76	0.83	8.483
5.5	7.5	112M*	36.33	6.5	2.5	2.6	0.01875	8/18	40.4	56	1450	84	85.7	85.7	0.54	0.66	0.75	12.4
7.5	10	132S	48.27	6.7	2.1	2.9	0.04652	8/18	62.3	60	1455	85	86.5	87	0.63	0.77	0.84	14.8

Notes:
**Class "F" insulation with ΔT105K*
Standard voltage, connection and frequency: 220-240V Δ 50Hz 380-415V Δ 50Hz
380-415V Y 50Hz 660-690V Y 50Hz
The values shown are subject to change without prior notice. To obtain guaranteed values please access our website.

Brake Motors Aluminium Frame - Improved Efficiency EFF2

Output		380 V								415 V							
		Rated speed (rpm)	% of full load						Full load current I_n (A)	Rated speed (rpm)	% of full load						Full load current I_n (A)
			Efficiency η			Power Factor (Cos φ)					Efficiency η			Power Factor (Cos φ)			
kW	HP		50	75	100	50	75	100			50	75	100	50	75	100	
II Pole - 3000 rpm																	
0.12	0.16	2690	48	55	58.8	0.59	0.74	0.84	0.369	2735	43	51	53.5	0.52	0.64	0.75	0.416
0.18	0.25	2700	52.5	57.5	59.5	0.6	0.75	0.85	0.541	2750	47.8	54.5	58	0.52	0.64	0.76	0.568
0.25	0.33	2685	54	59	60	0.56	0.71	0.81	0.782	2740	50	55.5	59.9	0.47	0.6	0.72	0.806
0.37	0.5	2700	62.8	66.5	67	0.66	0.81	0.89	0.943	2750	60	65.5	67	0.55	0.7	0.81	0.948
0.55	0.75	2670	68.5	70	69	0.71	0.83	0.9	1.35	2730	65	69	70.1	0.6	0.73	0.84	1.3
0.75	1	2740	69	73	72.5	0.67	0.79	0.86	1.83	2790	63	70.5	72.5	0.51	0.67	0.78	1.85
1.1	1.5	2745	75.5	76.5	76.5	0.68	0.81	0.87	2.51	2790	72	75.5	76.3	0.54	0.7	0.8	2.51
1.5	2	2820	78	80.1	78.9	0.7	0.81	0.87	3.32	2855	75	78.9	79.3	0.57	0.71	0.8	3.29
2.2	3	2790	78.5	80.2	80.8	0.7	0.82	0.88	4.701	2820	77.5	79.8	81.5	0.57	0.72	0.82	4.58
3	4	2855	82.4	83	83	0.75	0.85	0.89	6.17	2880	80.5	82.4	83.5	0.64	0.77	0.84	5.95
4	5.5	2860	83	84.2	84.5	0.77	0.86	0.89	8.08	2885	80.8	83.4	84.8	0.66	0.78	0.85	7.72
5.5	7.5	2895	84.4	86	86	0.77	0.85	0.89	10.9	2915	82.7	85.5	86.5	0.66	0.78	0.84	10.5
7.5	10	2890	86.8	87.5	87	0.78	0.86	0.89	14.7	2910	85	87	87.5	0.66	0.78	0.84	14.2
9.2	12.5	2900	87.4	88.5	88.4	0.76	0.85	0.89	17.8	2915	85.3	88	88.4	0.63	0.76	0.83	17.4
11	15	2910	88.5	89.5	89	0.76	0.84	0.88	21.3	2930	87.5	89	89.5	0.66	0.77	0.83	20.6
HIGH-OUTPUT DESIGN																	
0.37	0.5	2710	69.5	71.7	71	0.62	0.75	0.83	0.954	2765	65	70	71	0.52	0.66	0.76	0.954
0.75	1	2790	71	74	74	0.7	0.8	0.87	1.77	2830	67	71.5	73.5	0.6	0.71	0.8	1.77
1.5	2	2750	79	79.5	77	0.72	0.84	0.88	3.36	2790	77	78.5	78.5	0.62	0.77	0.84	3.16
3	4	2800	82	82.5	81.5	0.61	0.74	0.81	6.9	2845	80	81.5	81.5	0.5	0.64	0.74	6.92
4	5.5	2850	81.5	82.5	82	0.77	0.84	0.88	8.42	2890	80.3	82	82.5	0.68	0.78	0.84	8.03
5.5	7.5	2860	87	87.5	87.2	0.83	0.89	0.91	10.5	2880	86	87.5	87.7	0.77	0.85	0.89	9.8
7.5	10	2850	86.5	87	87	0.66	0.79	0.85	15.4	2885	85	87	87	0.53	0.67	0.76	15.8
IV Pole - 1500 rpm																	
0.12	0.16	1360	47	55	57	0.53	0.65	0.76	0.421	1385	42	51	55	0.45	0.57	0.67	0.457
0.18	0.25	1340	46	54	58	0.54	0.67	0.79	0.597	1370	43	52	56	0.45	0.57	0.68	0.658
0.25	0.33	1280	50	55	56	0.55	0.7	0.8	0.848	1320	43	51	55	0.45	0.58	0.7	0.903
0.37	0.5	1300	57	60	62	0.52	0.67	0.78	1.162	1340	52	57	60	0.44	0.55	0.68	1.262
0.55	0.75	1400	61	68	68.2	0.61	0.75	0.86	1.425	1415	58.5	66	67.6	0.51	0.67	0.79	1.433
0.75	1	1380	65	71.5	72	0.61	0.75	0.84	1.884	1405	61	68.4	71	0.5	0.64	0.76	1.934
1.1	1.5	1405	73	76	76.5	0.62	0.75	0.83	2.632	1425	67	75	77	0.49	0.64	0.75	2.65
1.5	2	1400	78.5	79	79	0.65	0.78	0.86	3.354	1415	74.5	78	79	0.52	0.67	0.77	3.431
2.2	3	1400	80.5	81	80.5	0.67	0.79	0.85	4.885	1420	79	81	81.5	0.55	0.68	0.78	4.815
3	4	1390	81.5	82	81.9	0.64	0.77	0.84	6.625	1410	78	81	82.6	0.52	0.67	0.78	6.478
4	5.5	1430	84.3	85	84.5	0.71	0.81	0.86	8.36	1445	82	84	85	0.59	0.72	0.8	8.18
5.5	7.5	1445	85.5	86	85.6	0.7	0.81	0.86	11.4	1455	83.2	85	85.7	0.58	0.72	0.81	11
7.5	10	1450	86.5	86.8	86.8	0.71	0.82	0.87	15.1	1455	83.2	85.7	86.7	0.57	0.72	0.8	15
9.2	12.5	1450	87.3	87.8	87.4	0.7	0.82	0.87	18.4	1455	85.3	87.1	87.5	0.59	0.73	0.82	17.8
HIGH-OUTPUT DESIGN																	
0.25	0.33	1405	54	61	63	0.49	0.6	0.7	0.861	1420	49	58	61	0.41	0.51	0.6	0.95
0.55	0.75	1370	69	72	72.5	0.51	0.63	0.72	1.6	1400	62	68	71	0.42	0.53	0.64	1.68
1.1	1.5	1370	68	69	69.5	0.61	0.76	0.86	2.8	1400	60	66	67	0.5	0.65	0.76	3.01
2.2	3	1390	76	77	76	0.65	0.75	0.83	5.3	1420	73	76	76.5	0.53	0.66	0.76	5.26
4	5.5	1380	82	82	81	0.69	0.8	0.85	8.827	1400	81	82.1	82.5	0.6	0.73	0.81	8.327
5.5	7.5	1445	85	86	85.7	0.6	0.72	0.79	12.3	1455	82	85.7	85.7	0.49	0.62	0.71	12.6
7.5	10	1450	86.5	86.8	86.8	0.71	0.82	0.87	15.1	1455	83.2	85.7	86.7	0.57	0.72	0.8	15

Brake Motors Aluminium Frame - Improved Efficiency EFF2

Output		IEC Frame	Full load torque C_n (Nm)	Locked rotor current I_l/I_n	Locked rotor torque T_l/T_n	Break-down torque T_b/T_n	Inertia J kgm²	Allowable locked rotor time Hot/Cold (s)	Weight (kg)	Sound dB (A)	Rated speed (rpm)	400 V						Full load current I_n (A)
												% of full load						
												Efficiency η			Power Factor (Cos φ)			
kW	HP											50	75	100	50	75	100	
VI Pole - 1000 rpm																		
0.12	0.16	63	1.31	2.6	1.7	1.6	0.00051	46/101	6.2	43	855	40.7	46.7	45.5	0.49	0.6	0.71	0.536
0.18	0.25	71	1.94	3.3	2	2.2	0.00079	50/110	7.8	43	905	46	54	57	0.46	0.55	0.62	0.735
0.25	0.33	71	2.58	3.5	2.2	2.2	0.00096	43/95	9.5	43	900	53	60.5	64	0.4	0.5	0.57	0.989
0.37	0.5	80	3.88	3.6	1.7	1.7	0.0019	16/35	10.2	43	905	55	60	63	0.5	0.64	0.75	1.13
0.55	0.75	80	5.66	4.5	2.3	2.3	0.00311	10/22	12.3	43	930	60	65	67	0.5	0.63	0.73	1.62
0.75	1	90S/L	7.72	4.2	1.9	2	0.00448	16/35	15.9	45	910	71	73	72.4	0.55	0.69	0.79	1.89
1.1	1.5	90S/L	11.39	4.8	2.7	2.7	0.00616	9/20	18.9	45	925	72.5	74	72.5	0.47	0.6	0.72	3.042
1.5	2	100L	15.44	4.1	2	2.2	0.00897	17/37	21.1	44	910	74.5	77.5	76	0.51	0.65	0.73	3.902
2.2	3	112M	22.42	5	2.2	2.3	0.01682	14/31	34.5	48	940	77.5	80.5	80.1	0.53	0.66	0.74	5.36
3	4	132S	29.27	5.3	2	2.2	0.03489	20/44	40.2	52	960	80	82.7	82.5	0.58	0.7	0.77	6.82
4	5.5	132M	40.24	5.8	2.3	2.4	0.04458	19/42	48.9	52	960	81.5	83.6	84.2	0.54	0.66	0.74	9.27
5.5	7.5	132M	54.87	6.4	2.7	2.8	0.05814	15/33	58.2	52	960	82.5	84.8	85.8	0.49	0.62	0.71	13
HIGH-OUTPUT DESIGN																		
3	4	112M	29.27	6.3	2.6	2.6	0.02617	10/22	39.7	48	960	78.5	81.7	84	0.53	0.65	0.73	7.06
VIII Pole - 750 rpm																		
0.12	0.16	71	1.7	2.2	2.1	2	0.00079	84/185	8.9	41	660	36.3	43.4	45.6	0.37	0.45	0.53	0.717
0.18	0.25	80	2.53	2.8	2.2	2.4	0.00208	29/64	10.5	42	695	36.2	44.1	48.6	0.45	0.53	0.62	0.862
0.25	0.33	80	3.31	3.5	2.3	2.2	0.00277	24/53	12	42	700	46.1	53.6	56.6	0.42	0.52	0.61	1.045
0.37	0.5	90S/L	5.13	3	1.9	1.8	0.00392	32/70	14.8	43	685	50.6	56.5	57.4	0.44	0.55	0.64	1.454
0.55	0.75	90S/L	7.8	3.3	1.9	2	0.00561	25/55	17.8	43	675	58	60	60	0.43	0.56	0.66	2.005
0.75	1	100L	9.96	3.5	1.8	2.4	0.00785	33/73	19.5	50	705	62	67.2	67.8	0.42	0.53	0.62	2.575
1.1	1.5	100L	15.05	4	1.7	2.3	0.01177	27/59	25.6	50	700	69.3	72.3	71.2	0.45	0.57	0.66	3.379
1.5	2	112M	20.07	4.2	2.2	2.2	0.01776	26/57	31.8	46	700	73.7	75.4	73.5	0.48	0.61	0.7	4.208
2.2	3	132S	29.68	6.1	2.5	2.8	0.06023	22/48	54.3	48	710	75.8	78	77.1	0.55	0.68	0.77	5.349
3	4	132M	39.57	6.1	2.2	2.6	0.07277	18/40	55.7	48	710	78.5	80.1	79	0.55	0.68	0.76	7.212

Notes:
**Class "F" insulation with ΔT105K*
Standard voltage, connection and frequency: 220-240V Δ 50Hz *380-415V Δ 50Hz*
380-415V Y 50Hz *660-690V Y 50Hz*
The values shown are subject to change without prior notice. To obtain guaranteed values please access our website.

Brake Motors Aluminium Frame - Improved Efficiency EFF2

Output		380 V								415 V							
		Rated speed (rpm)	% of full load						Full load current I_n (A)	Rated speed (rpm)	% of full load						Full load current I_n (A)
			Efficiency η			Power Factor (Cos φ)					Efficiency η			Power Factor (Cos φ)			
kW	HP		50	75	100	50	75	100			50	75	100	50	75	100	
VI Pole - 1000 rpm																	
0.12	0.16	845	46.2	50.6	47.6	0.52	0.64	0.76	0.504	860	36.2	42.8	43.2	0.48	0.57	0.67	0.577
0.18	0.25	895	49	55.5	57.5	0.49	0.59	0.65	0.732	910	43	52	56.5	0.44	0.52	0.59	0.751
0.25	0.33	890	56	63	65.3	0.44	0.55	0.61	0.954	905	50	58	62.5	0.37	0.46	0.54	1.03
0.37	0.5	890	57	62	65	0.54	0.69	0.8	1.08	910	55	60	62	0.47	0.6	0.72	1.15
0.55	0.75	920	62	65.8	68	0.54	0.67	0.77	1.6	935	58	64	66	0.47	0.59	0.68	1.7
0.75	1	895	70	72	72	0.61	0.75	0.83	1.91	915	70	71	71	0.52	0.66	0.76	1.93
1.1	1.5	915	73.2	76.4	75.6	0.52	0.67	0.77	2.871	930	71.3	71.4	72.5	0.42	0.55	0.67	3.15
1.5	2	900	73.6	78.5	79	0.57	0.7	0.77	3.747	920	74.2	75.9	74.2	0.46	0.6	0.69	4.076
2.2	3	930	79	80.8	79.7	0.58	0.7	0.76	5.52	950	76	80.3	80.5	0.5	0.63	0.72	5.28
3	4	955	81	83	82	0.61	0.72	0.79	7.04	965	79	82.5	82.6	0.53	0.66	0.74	6.83
4	5.5	960	82.7	84.2	84	0.58	0.73	0.78	9.28	965	80	82.9	83.9	0.52	0.64	0.72	9.21
5.5	7.5	960	84.2	85.5	85.7	0.56	0.69	0.75	13	965	81	83.7	85.4	0.45	0.57	0.66	13.6
HIGH-OUTPUT DESIGN																	
3	4	955	80	82	83.9	0.59	0.7	0.76	7.15	965	76.5	81.4	84	0.48	0.6	0.69	7.2
VIII Pole - 750 rpm																	
0.12	0.16	650	41	47.1	47.6	0.39	0.48	0.57	0.672	670	32.7	40.3	43.2	0.36	0.43	0.5	0.773
0.18	0.25	690	40.7	47.7	50.6	0.47	0.57	0.66	0.819	700	32.8	41.2	46.1	0.43	0.51	0.59	0.921
0.25	0.33	690	49	55.6	57.2	0.45	0.56	0.65	1.022	700	43.1	51.7	55.6	0.4	0.5	0.58	1.079
0.37	0.5	680	54.4	59	58.3	0.48	0.6	0.69	1.397	690	46.6	53.8	56.1	0.41	0.51	0.61	1.504
0.55	0.75	665	61.7	62	60	0.47	0.6	0.7	1.99	680	54.8	59	59	0.41	0.52	0.62	2.092
0.75	1	695	65.6	69	68	0.46	0.58	0.66	2.539	710	58.3	64.6	66.7	0.39	0.49	0.58	2.697
1.1	1.5	690	72.1	73.6	70.8	0.5	0.62	0.7	3.372	705	66.2	70.7	70.7	0.41	0.53	0.62	3.491
1.5	2	690	75.9	76.2	73.2	0.52	0.65	0.73	4.265	705	71.6	74.2	73.1	0.44	0.57	0.66	4.325
2.2	3	705	77.1	78.3	76.7	0.6	0.73	0.8	5.447	715	74.7	77.5	77.1	0.52	0.65	0.74	5.364
3	4	705	79.7	80.5	78.6	0.6	0.73	0.8	7.249	715	77.1	79.6	79	0.51	0.64	0.73	7.237

Brake Motors Aluminium Frame Premium Efficiency EFF1

Standard Features:

- Three-phase, multivoltage, IP55, TEFC
- Output: 0.12 up to 9.2kW
- Frames: 63 up to 132M
- Voltage: 220-240/380-415V (up to 100L)
  380-415/660V (from 112M and up)
- Class “F” insulation (ΔT=80K)
- Continuous duty: S1
- Design N
- Ambient temperature: 40°C , at 1000 m.a.s.l.
- Squirrel cage rotor/Aluminium die cast
- Ball bearings
- D.E.: V’Ring
- N.D.E.: Lip Seal
- Stainless steel nameplate
- Dimensions according to IEC-72
- Performance characteristics according to IEC 34
- Color: RAL 5009

Options Available:

- Thermal protection
- Space heaters
- Shaft dimensions to customer requirements
- Special finishing paint
- Class “H” insulation
- Other mounting configurations

More options available, on request

Typical Applications:

These motors can be used on any machine that requires quick stops and time savings during installation:

- Packing equipments
- Conveyor belts
- Washing and bottling machines
- Rolling bridges
- Elevators
- Printing machines
- Gates
- Wood machinery
- Cranes and others

Fan Cover
Made of steel plate for frames 63 up to 132M. The fan cover offers higher mechanical strength, corrosion-resistance and extended lifetime. With a design incorporating the braking system it is suitable for operation in severe environments. In addition, it offers quality and performance requirements of the motors such as noise level.

Terminal Box
Cast iron made with plenty of internal space. The terminal box can be rotated in 90º intervals, having one or two threaded holes to connect the power supply cables. Suitable to take the additional connection of the brake as well as bridge rectifier which is fixed internally without affecting the motor degree of protection. Larger volumes compared to standard motor allow easier connection and disconnection operations of the power supply, bridge rectifier and protection leads.
* Available as top or side mounting.

Brake
The electromagnetic brake is built of sturdy construction offering high performance for its low number of movable components and versatility on the application, resulting in extended lifetime and low maintenance. The possibility of having several torques and several power supply voltages makes this set a versatile component.

Winding
The wire is enameled with class H varnish. Supplied with patented WISE (WEG Insulation System Evolution), which allows three times longer motor lifetime designed to operate in environments with excess of moisture and suitable for VFD application. The winding is designed to obtain the minimal Joule losses and temperature rise.

Shaft
WEG uses SAE/AISI 1040/45 carbon steel as standard, which provides high mechanical strength, avoiding bending under load and minimizes fatigue which extends lifetime. Specially designed to withstand torques caused during motor acceleration and deceleration.

Rotor
High pressure die cast rotor dynamically balanced, thus reducing vibrations.

Fan
WEG has designed the fan having in mind the lowest noise level.
The efficient cooling ensures low motor temperature rise. This minimizes winding losses, thus increasing motor efficiency. Fan is designed with special materials to ensure suitable motor performance in reference to noise level and cooling. The W21 range is supplied with anti-static polypropylene fans from 63 up to 200 frames. Alternatively, aluminium fans can be supplied on request for all frames.

Bearings
WEG motors are fitted with the highest quality bearings selected from the best manufacturers in the world and designed to ensure long life of the motor even under heavy operating conditions.
WEG also uses the Super-premium Polyrex EM polyurea grease that is specially formulated for electric motor bearings. Its advanced thickener formulation provides low noise characteristics, improved bearing performance and protection.

Endshields
Made of cast iron, they are provided with external fins for better heat dissipation, thus increasing bearing life time.

Non-Drive Endshield
The non-drive endshield was specially designed to be coupled to the braking set as well as to withstand high thrusts coming from this set.

Nameplate
Stainless steel nameplate ensuring a permanent record of all motor data.

Seals
WEG motors are fitted with either V-ring seals, Oil seals, Lip seals and may also be fitted with Labyrinth Taconite or W3Seal to ensure the best possible protection under dusty and high moisture environments.

Stator
Built with low magnetic loss steel lamination to reduce losses and operating temperature.

Frame
Made of Aluminium with external fins for maximum cooling effect and minimum weight. This line of product is defined as a modern and easy assembly system, allowing change of mounting configuration including rotation of terminal box and/or removal of feet. Due to the material used on the frame construction there is an optimization of the electrical and mechanical designs resulting in an improved efficiency of the set and reduced weight. Resistance to corrosion is another benefit making it suitable for severe environments.

Feet
Removable feet on aluminium frames allow various mounting configurations.

Drain Hole
Provided with plastic drain plug allowing drainage of condensed water.

Brake Motors Aluminium Frame - Premium Efficiency EFF1

Output		IEC Frame	Full load torque C_n (Nm)	Locked rotor current I_l/I_n	Locked rotor torque T_l/T_n	Break-down torque T_b/T_n	Inertia J kgm²	Allowable locked rotor time Hot/Cold (s)	Weight (kg)	Sound dB (A)	Rated speed (rpm)	400 V						Full load current I_n (A)
												% of full load						
												Efficiency η			Power Factor (Cos φ)			
kW	HP											50	75	100	50	75	100	
II Pole - 3000 rpm																		
0.12	0.16	63	5	0.41	2.8	3	0.00012	25/55	5.6	52	2760	58	64.8	65.5	0.51	0.64	0.74	0.357
0.18	0.25	63	4.4	0.64	2.5	2.5	0.00012	30/66	5.6	52	2730	63.5	68.5	69.5	0.62	0.76	0.81	0.462
0.25	0.33	63	4.5	0.85	2.5	2.5	0.00016	18/40	6.1	52	2730	64	68.5	71.2	0.58	0.71	0.8	0.634
0.37	0.5	71	5.5	1.25	3	3.2	0.00037	23/51	8.2	56	2810	69	73.8	74.5	0.63	0.77	0.85	0.843
0.55	0.75	71	5.7	1.89	2.7	2.7	0.00045	16/35	8.8	56	2790	72.5	76.6	76.7	0.68	0.8	0.86	1.2
0.75	1	80	6.8	2.51	3.1	3.1	0.00079	20/44	11.4	59	2795	76.5	80.5	80.5	0.73	0.82	0.86	1.56
1.1	1.5	80	7.8	3.74	3.4	3.4	0.00096	15/33	12.4	59	2820	81	83	83.6	0.64	0.76	0.84	2.26
1.5	2	90S/L	7.3	4.91	2.8	2.8	0.00205	14/31	16.1	62	2860	83.2	84.9	84.5	0.68	0.8	0.85	3.01
2.2	3	90S/L	8.4	7.35	3.7	3.5	0.00266	9/20	18.3	62	2865	84	86	86.6	0.64	0.76	0.83	4.42
3	4	100L	8.9	9.7	3	3.1	0.00672	12/26	26.8	67	2895	84.5	87	88.3	0.73	0.83	0.87	5.64
4	5.5	112M	8.2	13.32	2.7	3.4	0.00842	17/37	36.6	64	2900	87	88.4	88.6	0.72	0.83	0.87	7.49
5.5	7.5	132S	8	17.95	2.7	3.2	0.02056	19/42	54.9	67	2935	88.5	90	90.1	0.71	0.81	0.86	10.2
7.5	10	132S	8	24.01	2.5	2.9	0.0243	13/29	60	67	2925	88.5	90.6	90.8	0.72	0.82	0.87	13.7
9.2	12.5	132M	8.5	29.91	2.8	3.1	0.02804	11/24	74	67	2935	88.5	90.9	91	0.7	0.81	0.87	16.8
IV Pole - 1500 rpm																		
0.12	0.16	63	0.79	4.5	2.6	2.7	0.00045	20/44	6	44	1415	56.5	62.5	64.5	0.43	0.55	0.65	0.413
0.18	0.25	63	1.25	4.6	2.6	2.7	0.00056	27/59	6.5	44	1400	58	64	67.5	0.44	0.55	0.66	0.583
0.25	0.33	71	1.66	5	3	3.1	0.00079	48/106	9.3	43	1400	69	73	75	0.5	0.61	0.69	0.697
0.37	0.5	71	2.52	5	2.7	2.8	0.00079	37/81	9.3	43	1395	69	74	75.5	0.47	0.59	0.69	1.03
0.55	0.75	80	3.68	6	2.6	2.8	0.00242	17/37	11.6	44	1430	72	77	78	0.56	0.69	0.78	1.3
0.75	1	80	4.95	6	2.6	2.6	0.00328	16/35	13.4	44	1420	76	78.6	80.1	0.62	0.75	0.82	1.65
1.1	1.5	90S/L	7.29	7	2.6	3	0.0056	14/31	18.1	49	1445	80	83.8	83.8	0.59	0.72	0.8	2.37
1.5	2	90S/L	9.69	7.5	2.8	3.3	0.00672	12/26	20.2	49	1450	80.5	84.6	85.2	0.54	0.68	0.77	3.3
2.2	3	100L	14.79	7.4	3	3	0.01072	17/37	28.8	53	1425	85.3	86.4	86.4	0.65	0.77	0.83	4.43
3	4	100L	19.65	7.8	2.9	3.3	0.01225	12/26	34.8	53	1430	84.5	86.5	87.5	0.64	0.76	0.83	5.96
4	5.5	112M	26.73	6.6	2.1	2.6	0.01875	12/26	40.3	56	1445	87.1	88.3	88.6	0.66	0.77	0.83	7.85
5.5	7.5	132S	35.96	8.5	2.4	3.1	0.05427	12/26	60.9	56	1465	88	89.6	90.1	0.69	0.79	0.85	10.4
7.5	10	132M	47.95	8.2	2.5	3	0.0659	9/20	68.6	56	1465	89	90	90.4	0.71	0.81	0.86	13.9
9.2	12.5	132M	59.93	8	2.5	3	0.06202	7/15	74	56	1465	88	89.5	90.4	0.68	0.8	0.85	17.281
HIGH-OUTPUT DESIGN																		
7.5	10	132S	47.95	8.2	2.5	3	0.0659	9/20	85	56	1465	89	90	90.4	0.71	0.81	0.86	13.9
VI Pole - 1000 rpm																		
0.12	0.16	63	1.23	3.5	2.2	2.1	0.00067	41/90	7	43	910	44	52	56.3	0.44	0.53	0.63	0.488
0.18	0.25	71	1.95	3.5	2.1	2.2	0.00079	49/108	9.1	43	900	49	57	61	0.42	0.51	0.6	0.71
0.25	0.33	71	2.58	3.5	2.1	2.2	0.00096	43/95	9.9	43	900	53	63	67	0.39	0.48	0.55	0.979
0.37	0.5	80	3.8	4.7	2.1	2.2	0.00242	14/31	11.4	43	925	62	67.5	70	0.48	0.61	0.7	1.09
0.55	0.75	80	5.73	4.8	2.2	2.4	0.00311	11/24	12.8	43	920	62	68.5	70.3	0.48	0.63	0.72	1.57
0.75	1	90S/L	7.63	4.8	2.1	2.2	0.0056	20/44	18.2	45	920	74	77.7	77.7	0.5	0.63	0.72	1.94
1.1	1.5	90S/L	11.45	5	2.3	2.4	0.00672	12/26	20.4	45	920	72	77.7	77.7	0.48	0.61	0.71	2.88
1.5	2	100L	14.87	5.5	2.2	2.5	0.01289	19/42	25.9	44	945	79	81.5	81.5	0.49	0.6	0.7	3.8
2.2	3	112M	22.18	6.2	2.4	2.6	0.02243	16/35	36.9	48	950	81.5	84	83.8	0.52	0.64	0.72	5.26
3	4	132S	29.27	6	2.1	2.5	0.04264	28/62	59	52	960	82	85	86.5	0.53	0.67	0.74	6.76
4	5.5	132M	40.24	6.5	2.2	2.5	0.05039	21/46	57.7	52	960	85	86.6	87.2	0.56	0.69	0.76	8.71
5.5	7.5	132M	54.59	6.8	2.3	2.5	0.0659	17/37	67.5	52	965	84.5	87.5	87.6	0.53	0.65	0.73	12.4
VIII Pole - 750 rpm																		
0.12	0.16	71	2.5	1.64	1.9	2.1	0.00079	44/97	8.9	41	685	38	46.2	49	0.38	0.47	0.55	0.643
0.18	0.25	80	3.1	2.51	1.8	2	0.00242	16/35	11.1	42	700	42	51	55.8	0.42	0.52	0.61	0.763
0.25	0.33	80	3.5	3.34	2	2	0.00294	15/33	12.4	42	695	51	60	64.3	0.41	0.52	0.61	0.92
0.37	0.5	90S/L	4	5.09	2	2	0.00448	21/46	16.1	43	690	53.5	61.3	64.5	0.39	0.5	0.59	1.4
0.55	0.75	90S/L	4	7.63	2	2.2	0.00616	21/46	19.1	43	690	59	64	66.3	0.39	0.5	0.6	2
0.75	1	100L	4.2	9.89	1.9	2.2	0.01121	38/84	23.9	50	710	71	74.2	76	0.4	0.53	0.61	2.34
1.1	1.5	100L	4.2	15.05	1.8	2.2	0.01289	31/68	24.7	50	700	71	74.5	77	0.4	0.52	0.62	3.33
1.5	2	112M	5.4	19.79	2.4	2.7	0.0243	32/70	38.4	46	710	79	81.3	82	0.43	0.55	0.66	4
2.2	3	132S	6.2	29.68	2.4	2.5	0.07527	25/55	61.8	48	710	82	84.3	84.2	0.54	0.66	0.73	5.17
3	4	132M	6	39.57	2.4	2.4	0.08531	21/46	62.4	48	710	82.8	84.6	84.5	0.54	0.67	0.75	6.83

Notes:
**Class "F" insulation with ΔT105K*
Standard voltage, connection and frequency: 220-240V Δ 50Hz
380-415V Y 50Hz
380-415V Δ 50Hz
660-690V Y 50Hz
The values shown are subject to change without prior notice. To obtain guaranteed values please access our website.

Brake Motors Aluminium Frame - Premium Efficiency EFF1

Output		380 V								415 V							
		Rated speed (rpm)	% of full load						Full load current I_n (A)	Rated speed (rpm)	% of full load						Full load current I_n (A)
			Efficiency η			Power Factor (Cos φ)					Efficiency η			Power Factor (Cos φ)			
kW	HP		50	75	100	50	75	100			50	75	100	50	75	100	
II Pole - 3000 rpm																	
0.12	0.16	2730	60	66	67	0.56	0.69	0.79	0.344	2790	55	63	63	0.48	0.61	0.71	0.373
0.18	0.25	2700	65	69	69	0.66	0.79	0.83	0.478	2760	62	68	70	0.58	0.73	0.78	0.459
0.25	0.33	2700	65.5	69.5	70	0.62	0.75	0.83	0.654	2755	62.5	67.5	71.9	0.55	0.68	0.77	0.628
0.37	0.5	2790	70.5	73.8	74.3	0.68	0.8	0.88	0.86	2825	67.5	73.8	74.5	0.6	0.74	0.82	0.843
0.55	0.75	2760	73.5	76.7	76.5	0.73	0.82	0.88	1.24	2810	71.5	76.5	76.7	0.64	0.77	0.84	1.19
0.75	1	2770	77	80.5	79.8	0.76	0.85	0.88	1.62	2805	76	80.5	80.5	0.7	0.79	0.84	1.54
1.1	1.5	2800	82	83.2	82.8	0.69	0.8	0.86	2.35	2835	80	82.5	83.5	0.58	0.72	0.81	2.26
1.5	2	2845	83.6	84.8	84.3	0.73	0.83	0.87	3.11	2870	82.8	84.8	84.6	0.64	0.77	0.83	2.97
2.2	3	2855	84.5	86	86	0.69	0.8	0.86	4.52	2875	83.5	86	86.6	0.58	0.72	0.8	4.42
3	4	2890	85	86.7	87.5	0.77	0.85	0.88	5.92	2900	84	86.7	88	0.69	0.81	0.86	5.51
4	5.5	2890	87.5	88.3	88.3	0.77	0.85	0.89	7.73	2910	86.5	88.3	88.5	0.68	0.81	0.86	7.31
5.5	7.5	2930	89	90.3	90.2	0.75	0.83	0.87	10.6	2940	88	89.8	90	0.68	0.78	0.84	10.1
7.5	10	2920	89	90.5	90.6	0.75	0.84	0.88	14.3	2930	88	90.6	90.9	0.7	0.8	0.86	13.3
9.2	12.5	2930	89	91	91	0.76	0.85	0.89	17.3	2940	88	90.8	91	0.66	0.77	0.85	16.5
IV Pole - 1500 rpm																	
0.12	0.16	1405	59	64	65	0.46	0.59	0.69	0.407	1425	54	60.5	63	0.4	0.51	0.61	0.434
0.18	0.25	1390	60	65	67	0.47	0.57	0.68	0.6	1410	56	63	67	0.41	0.53	0.64	0.584
0.25	0.33	1385	70	73.5	74.5	0.54	0.65	0.73	0.698	1415	68	72.5	75.5	0.46	0.58	0.66	0.698
0.37	0.5	1385	71	74.5	75.5	0.51	0.63	0.72	1.03	1405	67	73.5	75	0.43	0.55	0.66	1.04
0.55	0.75	1420	73	77.5	77.5	0.59	0.72	0.81	1.33	1435	71	76.5	78	0.53	0.65	0.75	1.31
0.75	1	1410	77	78.7	79.6	0.66	0.78	0.85	1.68	1425	75	78.5	80.1	0.58	0.71	0.79	1.65
1.1	1.5	1440	81.5	83.8	83.6	0.64	0.76	0.83	2.41	1450	78.5	83.8	83.8	0.55	0.69	0.77	2.37
1.5	2	1440	81.5	84.7	85	0.59	0.73	0.8	3.35	1455	79.5	84.5	85	0.5	0.64	0.74	3.32
2.2	3	1420	85.5	86.3	86.2	0.7	0.81	0.86	4.51	1430	85	86.4	86.4	0.62	0.75	0.81	4.37
3	4	1425	85	86.5	87.5	0.68	0.8	0.85	6.13	1435	84	86.5	87.5	0.6	0.73	0.81	5.89
4	5.5	1440	87.5	88.4	88.3	0.7	0.8	0.86	8	1450	86.7	88.2	88.6	0.62	0.74	0.81	7.75
5.5	7.5	1460	88.5	89.6	90	0.72	0.81	0.86	10.8	1470	87.5	89.4	90.1	0.65	0.77	0.83	10.2
7.5	10	1460	89.2	89.8	89.8	0.75	0.84	0.88	14.4	1465	88.7	89.8	90.3	0.68	0.79	0.85	13.6
9.2	12.5	1460	89	89.5	89.5	0.73	0.83	0.87	17.952	1465	87	89	90.3	0.64	0.76	0.83	17.077
HIGH-OUTPUT DESIGN																	
7.5	10	1460	89.2	89.8	89.8	0.75	0.84	0.88	14.4	1465	88.7	89.8	90.3	0.68	0.79	0.85	13.6
VI Pole - 1000 rpm																	
0.12	0.16	900	47	54	57	0.47	0.56	0.66	0.485	915	41	50	55	0.41	0.5	0.6	0.506
0.18	0.25	890	51	58	61	0.46	0.55	0.63	0.712	910	47	56	61	0.39	0.47	0.57	0.72
0.25	0.33	890	55	64	67	0.4	0.53	0.59	0.961	910	51	62	67	0.37	0.44	0.53	0.979
0.37	0.5	920	64	68.5	70.5	0.52	0.65	0.74	1.08	930	60	66.5	69.5	0.44	0.57	0.66	1.12
0.55	0.75	910	64	69.5	70.5	0.53	0.67	0.76	1.56	930	60	67.5	70	0.44	0.59	0.66	1.66
0.75	1	910	75	77.5	76.8	0.55	0.67	0.74	2.01	930	73	77.7	77.7	0.46	0.6	0.7	1.92
1.1	1.5	910	73	77.5	76.8	0.53	0.65	0.74	2.94	930	71	77.7	77.7	0.44	0.57	0.67	2.94
1.5	2	940	80	81.5	81.5	0.53	0.64	0.72	3.88	950	78	81.5	81.5	0.45	0.57	0.68	3.77
2.2	3	945	82.5	83.5	83.4	0.55	0.67	0.74	5.42	955	80.5	84	84	0.48	0.61	0.7	5.21
3	4	955	83	85.2	86	0.57	0.69	0.76	6.97	965	81	84.8	86.5	0.5	0.64	0.72	6.7
4	5.5	955	85.7	86.8	87	0.6	0.72	0.78	8.96	965	84.3	86.4	87.2	0.52	0.66	0.74	8.62
5.5	7.5	960	85.5	87.6	87.6	0.58	0.7	0.76	12.6	965	83.5	87.4	87.6	0.48	0.61	0.7	12.5
VIII Pole - 750 rpm																	
0.12	0.16	675	42	50	52	0.42	0.5	0.59	0.594	695	34	42	46.5	0.35	0.45	0.52	0.69
0.18	0.25	690	44	53	56	0.44	0.55	0.64	0.763	705	40	49	55.5	0.4	0.49	0.58	0.778
0.25	0.33	685	53	61	63.8	0.43	0.55	0.63	0.945	700	49	59	63.8	0.4	0.5	0.59	0.924
0.37	0.5	680	55	62.5	65	0.42	0.54	0.64	1.35	695	52	60	64	0.37	0.47	0.56	1.44
0.55	0.75	680	61	65	66.5	0.42	0.54	0.64	1.96	700	57	63	66	0.37	0.47	0.57	2.03
0.75	1	700	72	74.4	75.5	0.44	0.56	0.64	2.36	715	70	74	76	0.38	0.5	0.58	2.37
1.1	1.5	690	72.5	75.5	76.9	0.44	0.57	0.65	3.34	710	69.5	73.5	76.9	0.37	0.49	0.59	3.37
1.5	2	700	79.8	81.6	82	0.47	0.59	0.69	4.03	715	78.2	81	81.8	0.4	0.51	0.63	4.05
2.2	3	705	83	84.3	84.2	0.58	0.7	0.75	5.29	715	81	84.3	84.3	0.5	0.63	0.71	5.11
3	4	705	83.2	84.6	84.5	0.58	0.71	0.77	7.01	715	82.5	84.6	84.6	0.51	0.64	0.73	6.76

Brake Motors Aluminium Frame

Mechanical Data

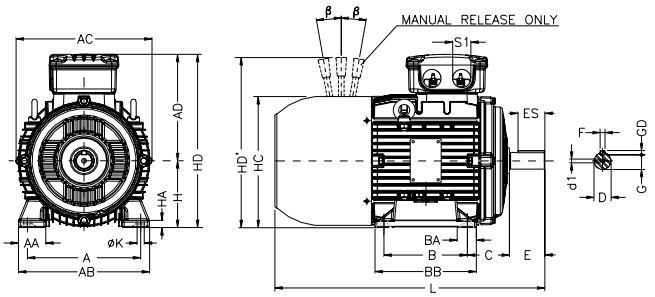

Aluminium Frame

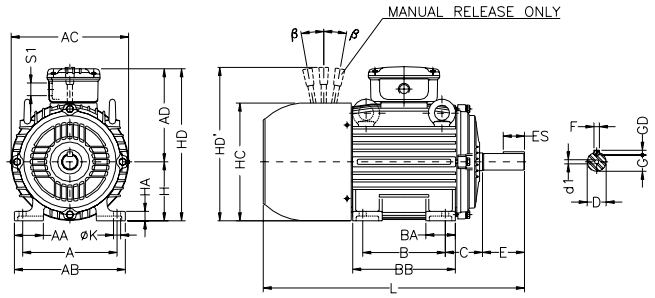

Cast Iron Frame

IEC FRAME		A	AA	AB	AC	AD	B	BA	BB	C	SHAFT DIMENSIONS D	E	ES	F	G	GD	H	HA	HC	HD	K	L	S1	d1	BEARINGS D.E.	BEARINGS N.D.E.	LENZE BRAKE TYP	LENZE BRAKE BRAKE SIZE	TORQUE N.m	MANUAL RELEASE HD	MANUAL RELEASE β
ALUMINIUM FRAME	63	100	19	116	125	113	80	23	95	40	11j6	23	14	4	8.5	4	63	6	124	176	6	256	2x M20x 1.5	EM4	6201-ZZ		BFK457	05	2N	-	-
																												06	4N		
	71	112	28	134	141	121	90	24.5	108	45	14j6	30	18	5	11	5	71		139	192		296		DM5	6203-ZZ	6202-ZZ		06	4N	180.2	12°
																												08	8N	189.0	10°
	80	125	32	155	159	130	100	28	124	50	19j6	40	28	6	15.5	6	80	8	157	210	10	338		DM6	6204-ZZ	6203-ZZ		06	4N	189.2	12°
																												08	8N	198.0	10°
	90S/L	140	35	170	179	150	125	24	146	56	24j6	50	36	8	20	7	90	9	177	240		403	2x M25x 1.5	DM8	6205-ZZ	6204-ZZ		08	8N	206.0	10°
																												10	16N	222.0	9°
	100L	160	40	196	200	160	140	30	170	63	28j6	60	45	8	24		100	12	198	260	12	457		DM10	6206-ZZ	6205-ZZ	BFK458	10	16N	232.0	9°
																												12	32N	261.0	10°
	112M	190	46	220	223	180		50		70							112		235	292		480	2x M32 x1.5		6307-ZZ	6206-ZZ		12	32N	273.0	10°
																												14	60N	307.0	9°
	132S	216	44	248	270	207	178	40	210	89	38k6	80	63	10	33	8	132		274	339		490		DM12	6308-ZZ	6207-ZZ		14	60N	327.0	10°
	132M							32																				16	80N	372.0	9°
CAST IRON FRAME	63	100	21	116	125	113	80	22	95	40	11j6	23	14	4	8.5	4	63	8	124	-	7	256	2x M20 x1.5	EM4	6201-ZZ		BFK457	05	2N	-	-
																												06	4N		
	71	112	30	132	141	121	90	38	113.5	45	14j6	30	18	5	11	5	71	12	139			296		DM5	6203-ZZ	6202-ZZ		06	4N	180.2	12°
																												08	8N	189.0	10°
	80	125	35	149	159	130	100	40	125.5	50	19j6	40	28	6	15.5	6	80	13	157		10	338		DM6	6204-ZZ	6203-ZZ		06	4N	189.2	12°
																												08	8N	198.0	10°
	90S	140	38	164	179	150	125	42	131	56	24j6	50	36	8	20	7	90	15	177			378		DM8	6205-ZZ	6204-ZZ		08	8N	206.0	10°
																												10	16N	222.0	9°
	90L								156													403	2x M25x 1.5					08	8N	206.0	10°
																												10	16N	222.0	9°
	100L	160	49	188	199	160	140	50	173	63	28j6	60	45	8	24		100	16	198			457		DM10	6206-ZZ	6205-ZZ		10	16N	232.0	9°
																												12	32N	261.0	10°
	112M	190	48	220	222	180			177	70							112	18.5	235	280		480			6307-ZZ	6206-ZZ		12	32N	273.0	10°
																												14	60N	307.0	9°
	132S	216	51	248	270	207	178	55	187	89	38k6	80	63	10	33	8	132	20	274	319	12	567	2x M32x 1.5	DM12	6308-ZZ	6207-ZZ	BFK458	14	60N	327.0	10°
																												16	80N	372.0	9°
	132M								225													605						14	60N	327.0	10°
																												16	80N	372.0	10°
	160M	254	64	308	312	250	210	65	254	108	42k6	110	80	12	37	8	160	22	317	370		719		DM16	6309-C3	6209-Z-C3		16	80N	400.0	10°
																												18	150N	439.0	9°
	160L						254		298													763						16	80N	400.0	10°
																												18	150N	439.0	9°
	180M	279	80	350	358	270	241	75	254	121	48k6	110	80	14	42.5	9	180	28	360	360	14.5	786	2x M40x 1.5		6311-C3	6211-Z-C3		18	150N	459.0	10°
																												20	260N	499.0	9°
	180L						279		298													824						18	150N	459.0	10°
																												20	260N	499.0	9°
	200M	254	64	308	312	250	210	65	254	133	55m6			16	49	10	200	30	402	402	19	836	2x M50x 1.5	DM20	6312-C3	6212-Z-C3		20	260N	519.0	10°
																												25	400N	645.0	
	200L						254		298													869						20	260N	519.0	
																												25	400N	645.0	

- *All dimensions are given in millimeters.*
- *Larger and smaller flanges, on request.*
- ** Shaft dimensions for II pole motors, only for direct coupling.*
- *The values shown are subject to change without prior notice. To obtain guaranteed values please contact our nearest sales office.*

** This data apply to Brake Motors – Cast Iron Frame and Aluminium Frame - Improved Efficiency - EFF2 / Premium Efficiency - EFF1 / Top Premium Efficiency - Exceeds EFF1.*

Brake Motors Aluminium Frame

Mechanical Data

"FF" Flange

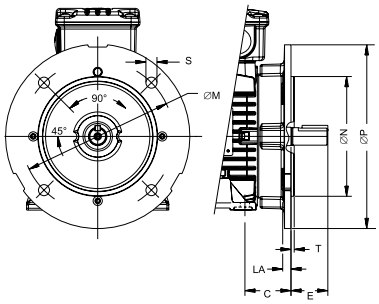

Aluminium Frame

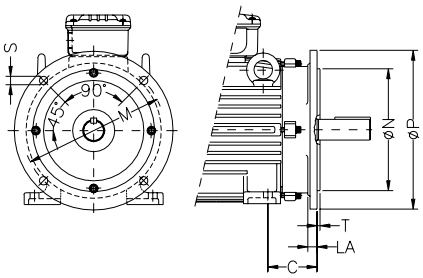

Cast Iron Frame

IEC FRAME	"FF" FLANGE								N° OF HOLES
	FLANGE	C	LA	M	N	P	T	S	
63	FF-115	40	9	115	95	140	3	10	45°	4
71	FF-130	45		130	110	160			
80	FF-165	50	10	165	130	200	3.5	12	
90S/L		56							
100L	FF-215	63	11	215	180	250	4	15	
112M		70							
132S	FF-265	89	12	265	230	300			
132M									
160M	FF-300	108	18	300	250	350	5	19	
160L									
180M		121							
180L									
200M	FF-350	133		350	300	400			
200L									

"C" Din Flange

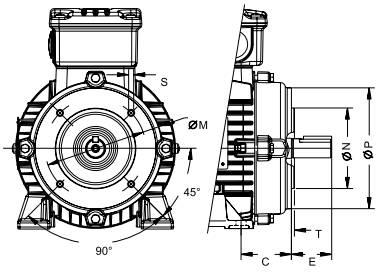

Aluminum Frame

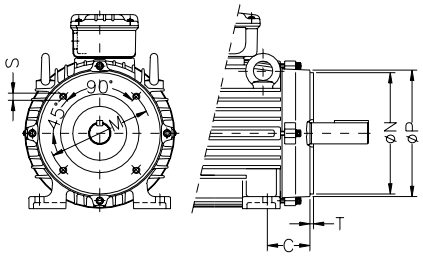

Cast Iron Frame

IEC FRAME	"C" DIN FLANGE							N° OF HOLES
	FLANGE	C	M	N	P	S	T	
63	C-90	40	75	60	90	M5	2.5	4
71	C-105	45	85	70	105	M6		
80	C-120	50	100	80	120		3	
90S/L	C-140	56	115	95	140	M8		
100L	C-160	63	130	110	160		3.5	
112M		70						
132S	C-200	89	165	130	200	M10		
132M								

Permanent Magnet Motors Drive System - Cast Iron Frame

Standard Features:

- Three-phase, multivoltage, IP55, TEFC
- Output: 11 up to 160kW
- Frames: 132S up to 250S/M
- Voltage: 400V
- Class “F” insulation (ΔT=80K)
- Continuous duty: S1
- Design N
- Ambient temperature: 40°C, at 1000 m.a.s.l.
- Squirrel cage rotor/Aluminium die cast
- V’Ring on both endshields
- Stainless steel nameplate AISI 316
- Dimensions according to IEC-72
- Performance characteristics according to IEC 34
- Regreasing nipple from frame 225S/M and above
- Metric threaded cable entries on the terminal box
- Thermistors (1 per phase) fitted in frame 160M and above
- Suitable for inverter duty applications
- Color: RAL 5007

Options Available:

- Mounting: B3, B5, B14, B34, V1, V5, etc
- Degree of Protection: IP56, IP65, IP66 or IPW
- Canopy
- Aluminium, Bronze or Cast Iron Fan
- Space Heaters

More options available, on request

Typical Applications:

Specially designed to operate in areas that require reduced vibrations and noise level, maximum efficiency in all speed variations and where the space is restricted:

- Pumps and Ventilation Systems
- Elevators
- Compressors
- Conveyor belts
- Others

Bearings
WEG Permanent Magnet Motors are fitted with the highest quality bearings selected among the best manufactures in the world and designed to ensure long life to the motor even under heavy operating conditions.
* All Motors are supplied with grease nipples.

Terminal Box
Cast iron made with plenty of internal space. The terminal box can be rotated in 90° intervals, having one or two threaded holes to connect the power supply cables.
* Available as top or side mounting.

Winding
The wire is enameled with class H varnish. Supplied with patented WISE (WEG Insulation System Evolution), which allows three times longer motor lifetime designed to operate in environments with excess of moisture and suitable for VFD application.
The winding is designed to obtain the minimal Joule losses and temperature rise.

Fan Cover
Made of steel or cast iron*, the fan cover offters a superior mechanical strength, corrosion-resistance and extended lifetime.
* Check for material availability.

Rotor
Wmagnet has high-energy magnets inside the rotor, in a configuration specially designed to minimize vibrations and noise and maximize efficiency in all speed variations.

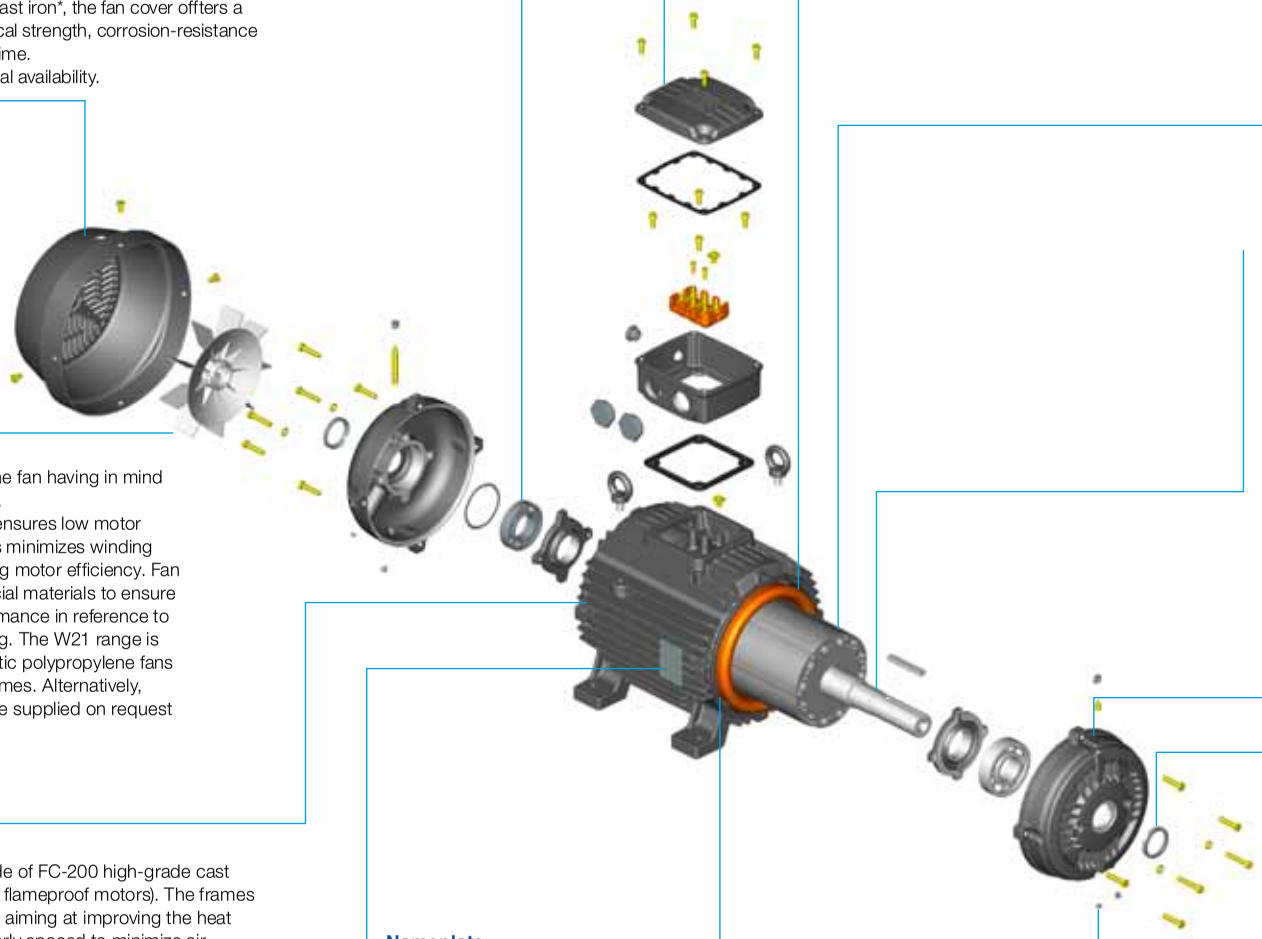

Shaft
WEG uses SAE/AISI 1040/45 carbon steel as standard, which provides high mechanical strength, avoiding bending under load and minimizes fatigue which extends lifetime. Specially designed to withstand torques caused during motor acceleration and deceleration.

Fan
WEG has designed the fan having in mind the lowest noise level.
The efficient cooling ensures low motor temperature rise. This minimizes winding losses, thus increasing motor efficiency. Fan is designed with special materials to ensure suitable motor performance in reference to noise level and cooling. The W21 range is supplied with anti-static polypropylene fans from 63 up to 200 frames. Alternatively, aluminium fans can be supplied on request for all frames.

Endshields
Made of cast iron, they are provided with external fins for better heat dissipation, thus increasing bearing life time.

Seals
WEG motors are fitted with either V-ring seals, Oil seals, Lip seals and may also be fitted with Labyrinth Taconite or W3Seal to ensure the best possible protection under dusty and high moisture environments.

Frame
WEG motors are made of FC-200 high-grade cast iron (same density as flameproof motors). The frames are provided with fins aiming at improving the heat dissipation and properly spaced to minimize air blockage due to accumularion of dirt. The motors can be mounted in either horizontal or vertical positions.

Nameplate
Stainless steel nameplate ensuring a permanent record of all motor data.

Stator
Built with low magnetic loss steel lamination to reduce losses and operating temperature.

Drain Hole
Provided with plastic drain plug allowing drainage of condensed water.

Permanent Magnet Motors Drive System

3000 rpm										
Motor								Drive		
Output		Frame	Torque [Nm]	Rated current at 400V [A]	Efficiency [%]	sound pressure level [dB(A)]	Approx motor weight [kg]	Drive	Drive dimensions [mm] HxWxD	Approx drive weight [kg]
kW	HP									
15	20	132S	47.7	24.3	95.8	72	63	CFW09PM030	390x223x274	19
18.5	25	132M	58.9	29.9	95.8	72	74	CFW09PM030*	390x223x274	19
22	30	160M	70.0	36.4	95.8	75	141	CFW09PM038	475x250x274	22.5
30	40	180M	95.5	48.7	96.2	75	201	CFW09PM060	550x335x274	41
37	50	180L	118	57.4	96.4	75	218	CFW09PM060*	550x335x274	41
45	60	200M	143	73.3	96.6	81	281	CFW09PM086	675x335x300	55
55	75	225S/M	175	88.6	96.6	85	392	CFW09PM0105	675x335x300	55
75	100	225S/M	239	116.4	96.9	85	464	CFW09PM0142	835x335x300	70
90	125	225S/M	286	139.7	97.1	85	503	CFW09PM0142*	835x335x300	70
110	150	250S/M	350	168.8	97.3	85	546	CFW09PM0240	975x410x370	100
132	175	250S/M	420	216.4	97.4	85	570	CFW09PM0312	1020x688x492	216
160	220	250S/M	477	251.3	97.5	85	595	CFW09PM0361	1085x700x492	259

1500 rpm										
Motor								Drive		
Output		Frame	Torque [Nm]	Rated current at 400V [A]	Efficiency [%]	sound pressure level [dB(A)]	Approx motor weight [kg]	Drive	Drive dimensions [mm] HxWxD	Approx drive weight [kg]
kW	HP									
11	15	132S	70.0	20.2	93.6	72	63	CFW09PM0024	290x182x196	6
15	20	132M	95.5	26.1	94.0	72	75	CFW09PM0030	390x223x274	19
18.5	25	160L	118	30.2	94.4	75	148	CFW09PM0030	390x223x274	19
22	30	180M	140	35.3	94.9	75	201	CFW09PM0038*	475x250x274	22.5
30	40	180L	191	47.9	94.9	75	219	CFW09PM0060	550x335x274	41
37	50	200M	235	60.5	95.9	81	281	CFW09PM0060*	550x335x274	41
45	60	200L	287	71.9	96	81	304	CFW09PM0086	675x335x300	55
55	75	225S/M	350	89.2	96.1	85	458	CFW09PM00105	675x335x300	55
75	100	250S/M	477	118.7	96.7	85	569	CFW09PM0142	835x335x300	70
90	125	250S/M	573	145.2	96.7	85	595	CFW09PM0180	975x410x370	100

Performance figures do not consider the VFD unit.

Permanent Magnet Motors Drive System

Mechanical Data

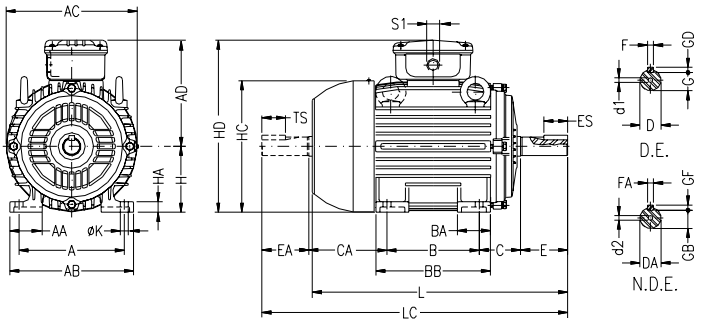

IEC FRAME	A	AA	AB	AC	AD Ex-n	AD Ex-e	B	BA	BB	C	CA	SHAFT DIMENSIONS D	E	ES	F	G	GD	DA	EA	TS	FA	GB	GF	H	HA	HC	HD Ex-n	HD Ex-e	K	L	LC	S1	d1	d2	BEARINGS D.E.	BEARINGS N.D.E.
132S	216	51	248	270	212		-	55	187	89	150	38k6	80	63	10	33	8	28j6	60	45		24		132	20	274	344			452	519	-	DM12	DM10	6308-ZZ	6207-ZZ
132M							178		225																					490	557					
160M	254	64	308	312	255		210	65	254	108	174	42k6	110	80	12	37		42k6	110	80	12	37	8	160	22	317	415		14.5	598	712	2x M40x 1.5	DM16		6309-C3	6209-C3
160L							254		298																					642	756					
180M	279	80	350	358	275		241	75	294	121	200	48k6			14	42.5	9	48k6			14	42.5	9	180	28	360	455			664	782				6311-C3	6211-C3
180L							279		332																					702	820					
200M	318	82	385	396	300		267	85		133	222	55m6			16	49	10							200	30	402	500		18.5	729	842	2x M50x 1.5	M20		6312-C3	6212-C3
200L							305		370																					767	880					
225S/M	356	80	436	476	373		286	105	391	149	280	55m6*		100				55m6*		100	16	49	10	225	34	466	598			817	935				6314-C3	
							311				255	60m6	140	125	18	53	11	60m6	140	125	18	53	11							847	995					
250S/M	406	100	506					138	449	168	312	60m6*						60m6*						250	42	491	623		24	923	1071	2x M63x 1.5				
							349				274	65m6				58		60m6																	

IEC FRAME	"FF" FLANGE DIMENSIONS Flange	C	LA	M	N	P	T	S	α	N° OF HOLES
132S/M	FF-265	89	12	265	230	300	-	-	-	-
160M/L	FF-300	108	18	300	250	350	5	19		
180M/L		121								
200M/L	FF-350	133		350	300	400				
225S/M	FF-400	149		400	350	450			22°30'	8
250S/M	FF-500	168		500	450	550				

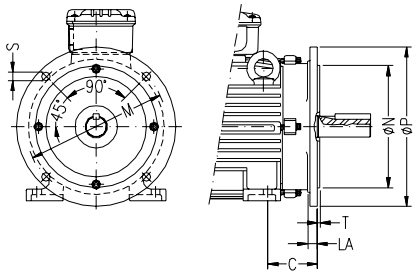

IEC FRAME	"C" FLANGE DIMENSIONS Flange	C	M	N	P	S	T	N° OF HOLES
132S/M	C-200	89	165	130	200	M10	2,5	4
160M/L		108				1/2"13		
180M/L	FC-228	121	228.6	266.7	280			
200M/L		133						
225S/M	FC-279	149	279.4	317.5	395	UNC		8
250S/M	FC-355	168	355.6	406.4	455			

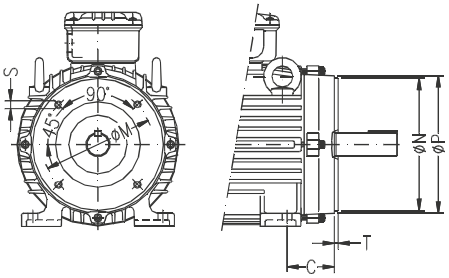

Inverter Duty Motors Cast Iron Frame Improved Efficiency EFF2

Standard Features:

- Three-phase, multivoltage, IP55, TEFC
- Output: 0.12 up to 355kW
- Frames: 63 up to 355M/L for IDM self ventilated (according to W21 line)
  90S up to 355M/L for IDM forced ventilation-with or without encoder 1)
- Voltage: Single-voltage-220/380V; 380/660V or 415
  Multivooltage-220-440/380-415V or 380-415/690V
- Class “F” insulation (ΔT=80K)
- Continuous duty: S1
- Design N
- Ambient temperature: 40°C, at 1000 m.a.s.l.
- Squirrel cage rotor/Aluminium die cast
- V’Ring on both endshields
- Regreasing nipple from frame 225S/M and above
- Metric threaded cable entries on the terminal box
- Thermistors (1 per phase) fitted in frame 160M and above
- Suitable for inverter duty applications
- Color: RAL 5009

1) Encoder type RI58-D from Hengstler or H535 from Dynapar (Hollow Shaft)

Options Available:

- Oil seal, lip seal or labyrinth tachonite for frame 90S and above
- Space heaters
- Class “H” insulation
- Special insulated bearings
- Thermistors (Alarm)
- IP56, IP65 and IP66 (W)
- Other mounting configuration, on request

More options available, on request

Typical Applications:

- Pumps
- Fans
- Crushers
- Conveyor belts
- Mills
- Centrifugal machines
- Presses
- Elevators
- Packaging equipment
- Grinders and others.

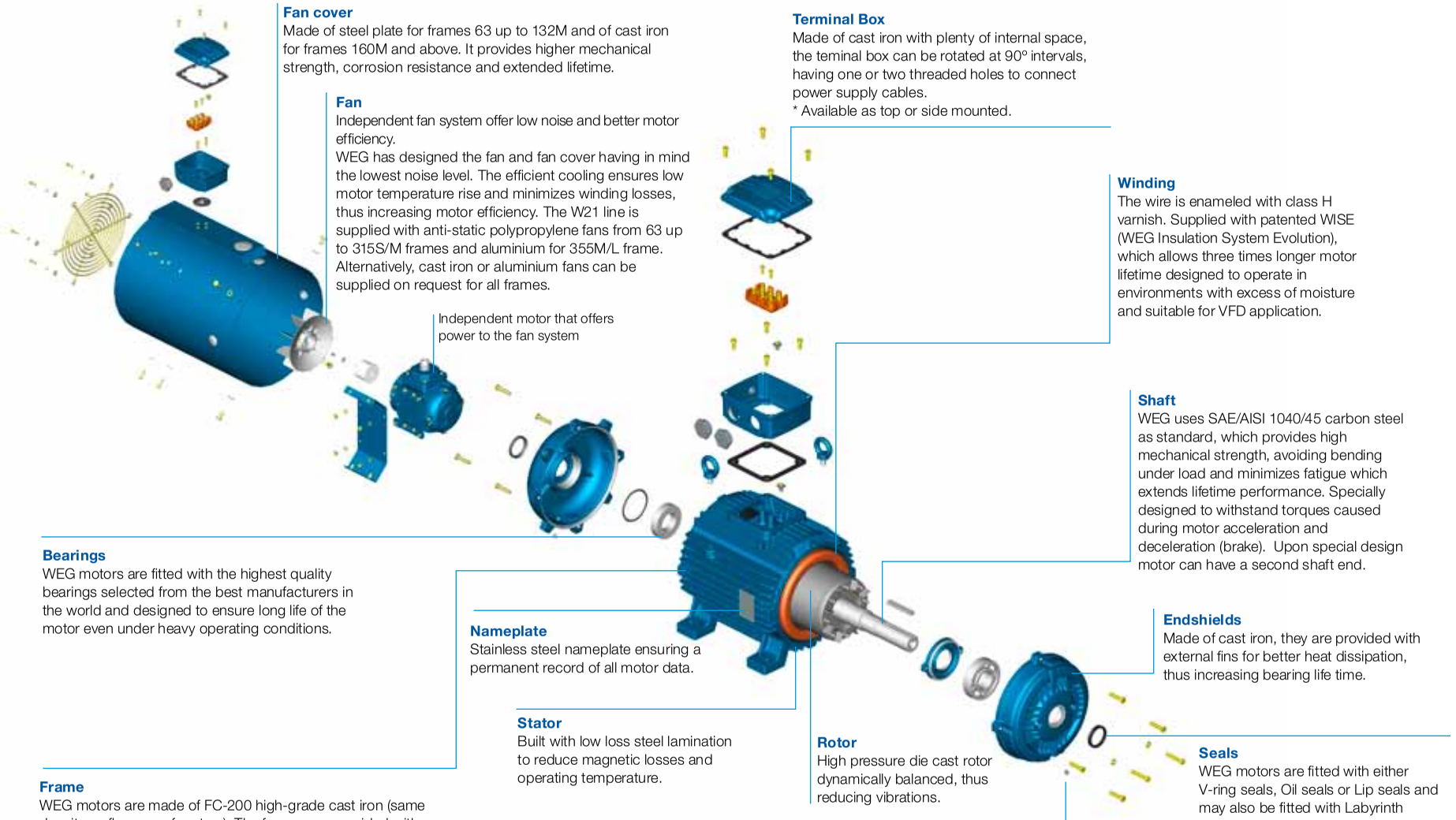

Fan cover
Made of steel plate for frames 63 up to 132M and of cast iron for frames 160M and above. It provides higher mechanical strength, corrosion resistance and extended lifetime.

Fan
Independent fan system offer low noise and better motor efficiency.
WEG has designed the fan and fan cover having in mind the lowest noise level. The efficient cooling ensures low motor temperature rise and minimizes winding losses, thus increasing motor efficiency. The W21 line is supplied with anti-static polypropylene fans from 63 up to 315S/M frames and aluminium for 355M/L frame. Alternatively, cast iron or aluminium fans can be supplied on request for all frames.

Independent motor that offers power to the fan system

Terminal Box
Made of cast iron with plenty of internal space, the teminal box can be rotated at 90° intervals, having one or two threaded holes to connect power supply cables.
* Available as top or side mounted.

Winding
The wire is enameled with class H varnish. Supplied with patented WISE (WEG Insulation System Evolution), which allows three times longer motor lifetime designed to operate in environments with excess of moisture and suitable for VFD application.

Shaft
WEG uses SAE/AISI 1040/45 carbon steel as standard, which provides high mechanical strength, avoiding bending under load and minimizes fatigue which extends lifetime performance. Specially designed to withstand torques caused during motor acceleration and deceleration (brake). Upon special design motor can have a second shaft end.

Bearings
WEG motors are fitted with the highest quality bearings selected from the best manufacturers in the world and designed to ensure long life of the motor even under heavy operating conditions.

Nameplate
Stainless steel nameplate ensuring a permanent record of all motor data.

Endshields
Made of cast iron, they are provided with external fins for better heat dissipation, thus increasing bearing life time.

Stator
Built with low loss steel lamination to reduce magnetic losses and operating temperature.

Rotor
High pressure die cast rotor dynamically balanced, thus reducing vibrations.

Seals
WEG motors are fitted with either V-ring seals, Oil seals or Lip seals and may also be fitted with Labyrinth Taconite seals or W3Seal to ensure the best possible protection under dusty and high moisture environments.

Drain Hole
Provided with plastic drain plug allowing drainage of condensed water.

Frame
WEG motors are made of FC-200 high-grade cast iron (same density as flameproof motors). The frames are provided with fins aimed at improving the heat dissipation and adequately spaced to minimize air blockage due to accumulation of dirt. The motors can be mounted in horizontal or vertical positions. Motor can be supplied with encoder which makes the drive + motor assembly suitable for applications when speed and positioning control are required. Standard encoder is H535, Dynapar, and 1024 pulses (other types of encoder can be adapted to the motor, upon request)

Inverter Duty Motors - Improved Efficiency EFF2

Output		IEC Frame	Full load torque C_n (Nm)	Locked rotor current I_l/I_n	Locked rotor torque T_l/T_n	Break-down torque T_b/T_n	Inertia J kgm²	Allowable locked rotor time Hot/Cold (s)	Weight (kg)	Sound dB (A)	Rated speed (rpm)	400 V						Full load current I_n (A)
												% of full load						
												Efficiency η			Power Factor (Cos φ)			
kW	HP											50	75	100	50	75	100	
II Pole - 3000 rpm																		
0.12	0.16	63	0.41	3.8	2.3	2.3	0.00011	27/59	6.7	52	2720	45.5	53.5	56	0.55	0.68	0.8	0.387
0.18	0.25	63	0.64	4.2	2.4	2.3	0.00013	30/66	6.7	52	2730	50.5	56.5	59	0.55	0.69	0.8	0.55
0.25	0.33	63	0.85	4.3	2.5	2.3	0.00016	25/55	7	52	2720	52	57	60	0.5	0.65	0.76	0.791
0.37	0.5	71	1.29	4.3	2.3	2.3	0.00026	23/51	8.8	56	2730	61.2	66	67.6	0.6	0.75	0.85	0.929
0.55	0.75	71	1.94	4.2	2.5	2.7	0.00034	10/22	9.6	56	2710	67.5	70	70	0.65	0.78	0.87	1.3
0.75	1	80	2.54	5	2.4	2.4	0.00057	9/20	12	59	2770	66	72	73	0.59	0.73	0.82	1.81
1.1	1.5	80	3.8	5	2.6	2.6	0.00079	7/15	13.5	59	2770	74	76.5	76.5	0.6	0.75	0.83	2.5
1.5	2	90S	4.95	6.3	2.7	2.6	0.0017	7/15	18.9	64	2840	77	79.5	79.5	0.63	0.76	0.83	3.28
2.2	3	90L	7.5	6.8	2.8	2.9	0.00218	9/20	21.3	64	2810	78	80	81.5	0.63	0.77	0.85	4.584
3	4	100L	9.79	6.7	2.3	2.8	0.00518	9/20	28.6	67	2870	81.3	83	83.5	0.69	0.81	0.87	5.961
4	5.5	112M	13.44	6.8	2.4	3	0.00728	9/20	39	64	2875	82	84	85	0.71	0.82	0.87	7.81
5.5	7.5	132S	18.1	6.5	2.4	3	0.01589	11/24	54.2	68	2910	83.5	86	86.5	0.71	0.81	0.87	10.5
7.5	10	132S	24.22	6.4	2.3	2.6	0.0187	11/24	66.7	68	2900	86	87.5	87.5	0.72	0.82	0.87	14.2
9.2	12.5	132M	30.17	7.5	2.7	3.1	0.02431	8/18	64.4	68	2910	86.5	88.5	88.5	0.7	0.81	0.86	17.4
11	15	160M	35.96	6.5	2	3	0.0353	11/24	98.1	70	2930	87	88.5	88.8	0.7	0.81	0.86	20.8
15	20	160M	47.86	7.4	2.2	3.1	0.04707	9/20	107.9	70	2935	88	90	90.1	0.69	0.8	0.86	27.9
18.5	25	160L	59.83	8	2.5	3.2	0.05589	7/15	129.3	70	2935	89	90.5	90.7	0.67	0.78	0.86	34.2
22	30	180M	71.55	7.3	2.3	3.2	0.09649	11/24	185.1	70	2945	91	92	92	0.74	0.83	0.87	39.7
30	40	200L	94.92	7.3	2.6	2.9	0.1794	13/29	229.8	74	2960	91	92	92.4	0.7	0.8	0.85	55.1
37	50	200L	118.65	7	2.6	2.8	0.2063	12/26	265.5	74	2960	91	92	92.5	0.71	0.8	0.86	67.1
45	60	225S/M	142.38	7	2.3	3.1	0.31392	16/35	351.8	82	2960	91.2	92.4	92.7	0.78	0.85	0.88	79.6
55	75	250S/M	177.67	7.5	2.4	3.2	0.37671	13/29	401.9	82	2965	92	93	93.3	0.77	0.85	0.88	96.7
75	100	280S/M	235.7	8	2.4	3.2	1.08257	22/48	658.2	83	2980	91.6	93.4	93.9	0.76	0.85	0.88	131
90	125	280S/M	294.63	8	2.4	3.2	1.1767	19/42	682.5	83	2980	92	93.6	94.2	0.78	0.85	0.88	157
110	150	315S/M	354.15	7.7	2.4	3	1.41204	21/46	806	84	2975	93	94.2	94.5	0.78	0.85	0.88	191
132	175	315S/M	413.17	7.5	2.4	3	1.64738	18/40	868.5	84	2975	93.6	94.7	94.8	0.8	0.87	0.89	226
160	220	315S/M	519.42	7.5	2.6	3.1	2.11806	17/37	981.2	84	2975	94.3	95	95.1	0.83	0.88	0.9	270
200	270	315B	637.47	6.4	1.8	2.8	2.8101	30/66	1415	92	2975	92	93.4	93.7	0.72	0.82	0.85	362
200	270	355M/L	635.33	7.2	1.8	2.6	4.82631	70/154	1490	81	2985	93.5	95	95.4	0.89	0.91	0.92	329
250	340	315B	804.09	6.5	1.9	2.7	3.212	27/59	1490	92	2970	93	94	94.4	0.75	0.83	0.86	444
250	340	355M/L	800.05	7.8	2.2	2.5	5.74561	65/143	1750	81	2985	94.4	95.8	96	0.88	0.91	0.92	409
315	430	315B*	1016.94	6.7	1.9	2.6	4.0145	19/42	1590	92	2970	93.8	94.6	94.6	0.79	0.86	0.88	546
HIGH-OUTPUT DESIGN																		
0.37	0.5	63	1.28	5.2	3.1	2.9	0.00021	14/31	7.9	52	2740	67	71	71.3	0.57	0.7	0.79	0.948
0.75	1	71	2.5	6.2	3.1	3.1	0.00052	8/18	11.1	56	2810	69	73	74	0.65	0.76	0.84	1.74
1.5	2	80	5.07	6	3	2.7	0.00096	10/22	14.9	59	2770	77	78.5	77.7	0.7	0.82	0.87	3.2
2.2	3	90S	7.5	6.8	2.8	2.9	0.00218	9/20	19	64	2810	78	80	81.5	0.63	0.77	0.85	4.584
3	4	90L*	9.93	6.2	3.2	3.1	0.00266	6/13	21.8	64	2830	81	82	82	0.55	0.68	0.78	6.77
4	5.5	100L	13.46	7.5	2.9	3.1	0.00672	7/15	31.1	67	2870	81	82.3	82.5	0.72	0.81	0.86	8.14
5.5	7.5	112M	18.36	7.7	2.5	3	0.00995	10/22	45.8	64	2870	86.5	87.5	87.5	0.8	0.87	0.9	10.1
7.5	10	112M*	24.47	7.6	3	3	0.00995	6/13	46.3	64	2870	86.5	87.5	87.5	0.59	0.72	0.81	15.3
11	15	132M	36.08	8	2.7	3.2	0.02804	8/18	73.6	68	2920	88	89.5	89.5	0.71	0.81	0.86	20.6
22	30	160L*	71.92	7.5	2.5	3	0.06766	6/13	133.3	70	2930	90	90.6	90.7	0.72	0.82	0.86	40.7
30	40	180L*	95.4	8.7	2.5	3.1	0.13622	9/20	191.4	70	2945	92	92.7	92.7	0.74	0.83	0.87	53.7
37	50	200M	118.65	7	2.6	2.8	0.2063	12/26	245	74	2960	91	92	92.5	0.71	0.8	0.86	67.1
55	75	225S/M	177.67	7.5	2.4	3.2	0.37671	13/29	410	82	2965	92	93	93.3	0.77	0.85	0.88	96.7
75	100	250S/M	236.9	8.3	2.6	3	0.50228	10/22	477.7	82	2965	93	93.6	93.6	0.81	0.87	0.9	129
110	150	280S/M	354.15	7.7	2.4	3	1.41204	21/46	748.9	83	2975	93	94.2	94.5	0.78	0.85	0.88	191
132	175	280S/M	413.17	7.5	2.4	3	1.64738	18/40	811.8	83	2975	93.6	94.7	94.8	0.8	0.87	0.89	226
200	270	315S/M	636.4	7.9	2.2	2.9	2.16513	49/108	1010.4	84	2980	95.2	95.8	96.1	0.79	0.84	0.87	345

Notes:
**Class "F" insulation with ΔT105K*
Standard voltage, connection and frequency: 220-240V Δ 50Hz 380-415V Δ 50Hz
380-415V Y 50Hz 660-690V Y 50Hz
The values shown are subject to change without prior notice. To obtain guaranteed values please access our website.

Inverter Duty Motors - Improved Efficiency EFF2

Output		380 V								415 V							
		Rated speed (rpm)	% of full load						Full load current I_n (A)	Rated speed (rpm)	% of full load						Full load current I_n (A)
			Efficiency η			Power Factor (Cos φ)					Efficiency η			Power Factor (Cos φ)			
kW	HP		50	75	100	50	75	100			50	75	100	50	75	100	
II Pole - 3000 rpm																	
0.12	0.16	2690	48	55	58.8	0.59	0.74	0.84	0.369	2735	43	51	53.5	0.52	0.64	0.75	0.416
0.18	0.25	2700	52.5	57.5	59.5	0.6	0.75	0.85	0.541	2750	47.8	54.5	58	0.52	0.64	0.76	0.568
0.25	0.33	2685	54	59	60	0.56	0.71	0.81	0.782	2740	50	55.5	59.9	0.47	0.6	0.72	0.806
0.37	0.5	2700	62.8	66.5	67	0.66	0.81	0.89	0.943	2750	60	65.5	67	0.55	0.7	0.81	0.948
0.55	0.75	2670	68.5	70	69	0.71	0.83	0.9	1.35	2730	65	69	70.1	0.6	0.73	0.84	1.3
0.75	1	2740	69	73	72.5	0.67	0.79	0.86	1.83	2790	63	70.5	72.5	0.51	0.67	0.78	1.85
1.1	1.5	2745	75.5	76.5	76.5	0.68	0.81	0.87	2.51	2790	72	75.5	76.3	0.54	0.7	0.8	2.51
1.5	2	2820	78	80.1	78.9	0.7	0.81	0.87	3.32	2855	75	78.9	79.3	0.57	0.71	0.8	3.29
2.2	3	2790	78.5	80.2	80.8	0.7	0.82	0.88	4.701	2820	77.5	79.8	81.5	0.57	0.72	0.82	4.58
3	4	2855	82.4	83	83	0.75	0.85	0.89	6.17	2880	80.5	82.4	83.5	0.64	0.77	0.84	5.95
4	5.5	2860	83	84.2	84.5	0.77	0.86	0.89	8.08	2885	80.8	83.4	84.8	0.66	0.78	0.85	7.72
5.5	7.5	2895	84.4	86	86	0.77	0.85	0.89	10.9	2915	82.7	85.5	86.5	0.66	0.78	0.84	10.5
7.5	10	2890	86.8	87.5	87	0.78	0.86	0.89	14.7	2910	85	87	87.5	0.66	0.78	0.84	14.2
9.2	12.5	2900	87.4	88.5	88.4	0.76	0.85	0.89	17.8	2915	85.3	88	88.4	0.63	0.76	0.83	17.4
11	15	2915	87.5	88.5	88.5	0.76	0.84	0.87	21.7	2935	85	87.5	88	0.67	0.78	0.84	20.7
15	20	2925	88.5	90	90	0.74	0.83	0.87	29.1	2940	87.5	89.2	89.7	0.64	0.76	0.83	28
18.5	25	2930	89.5	90.5	90.5	0.74	0.83	0.87	35.7	2940	88	90	90.5	0.63	0.75	0.82	34.7
22	30	2935	91.5	92	91.5	0.78	0.85	0.88	41.5	2950	90.5	91.5	92	0.7	0.8	0.85	39.1
30	40	2955	91	92	92.2	0.76	0.84	0.87	56.8	2965	90	91.5	92	0.64	0.76	0.82	55.3
37	50	2950	91	92	92.5	0.76	0.84	0.87	69.9	2960	89	91	92	0.66	0.77	0.83	67.4
45	60	2955	91.4	92.3	92.5	0.79	0.86	0.89	83	2965	91	92.4	92.7	0.76	0.84	0.87	77.6
55	75	2960	92	92.9	93.2	0.79	0.86	0.89	101	2965	91.7	93	93.3	0.73	0.83	0.86	95.4
75	100	2980	91.8	93.4	93.9	0.79	0.86	0.89	136	2980	91.4	93.3	93.8	0.74	0.83	0.87	128
90	125	2975	92.4	93.6	94.1	0.8	0.87	0.89	163	2980	92	93.5	94.2	0.75	0.83	0.87	153
110	150	2975	93.1	94.2	94.4	0.81	0.86	0.89	199	2980	92.9	94.1	94.5	0.76	0.84	0.87	186
132	175	2975	93.8	94.6	94.7	0.83	0.88	0.9	235	2980	93.6	94.7	94.8	0.79	0.86	0.88	220
160	220	2970	94.5	95	95	0.84	0.89	0.9	284	2975	94.3	95	95.1	0.81	0.87	0.89	263
200	270	2970	92.2	93.4	93.6	0.74	0.83	0.86	377	2975	91.9	93.4	93.7	0.7	0.81	0.84	354
200	270	2980	93.7	95	95.3	0.9	0.92	0.92	347	2985	93.3	94.9	95.4	0.88	0.9	0.91	321
250	340	2970	93.2	94	94.3	0.77	0.84	0.87	463	2975	92.9	94	94.4	0.73	0.82	0.85	433
250	340	2980	94.5	95.8	96	0.9	0.92	0.93	425	2985	94.3	95.8	96.1	0.87	0.91	0.92	393
315	430	2970	94	94.5	94.4	0.8	0.87	0.89	570	2975	93.7	94.6	94.6	0.77	0.85	0.87	532
HIGH-OUTPUT DESIGN																	
0.37	0.5	2710	69.5	71.7	71	0.62	0.75	0.83	0.954	2765	65	70	71	0.52	0.66	0.76	0.954
0.75	1	2790	71	74	74	0.7	0.8	0.87	1.77	2830	67	71.5	73.5	0.6	0.71	0.8	1.77
1.5	2	2750	78	78.5	76.5	0.75	0.85	0.89	3.35	2790	76	78.5	78.5	0.65	0.78	0.85	3.13
2.2	3	2790	78.5	80.2	80.8	0.7	0.82	0.88	4.701	2820	77.5	79.8	81.5	0.57	0.72	0.82	4.58
3	4	2800	82	82.5	81.5	0.61	0.74	0.81	6.9	2845	80	81.5	81.5	0.5	0.64	0.74	6.92
4	5.5	2850	81.5	82.5	82	0.77	0.84	0.88	8.42	2890	80.3	82	82.5	0.68	0.78	0.84	8.03
5.5	7.5	2860	87	87.5	87.2	0.83	0.89	0.91	10.5	2880	86	87.5	87.7	0.77	0.85	0.89	9.8
7.5	10	2850	86.5	87	87	0.66	0.79	0.85	15.4	2885	85	87	87	0.53	0.67	0.76	15.8
11	15	2910	88.5	89.5	89	0.76	0.84	0.88	21.3	2930	87.5	89	89.5	0.66	0.77	0.83	20.6
22	30	2925	90.5	90.7	90.5	0.77	0.85	0.88	42	2935	89.5	90.5	90.7	0.68	0.79	0.84	40.2
30	40	2940	92	92.3	92.3	0.78	0.84	0.88	56.1	2950	92	92.7	92.7	0.71	0.8	0.85	53
37	50	2950	91	92	92.5	0.76	0.84	0.87	69.9	2960	89	91	92	0.66	0.77	0.83	67.4
55	75	2960	92	92.9	93.2	0.79	0.86	0.89	101	2965	91.7	93	93.3	0.73	0.83	0.86	95.4
75	100	2960	93.1	93.4	93.4	0.84	0.89	0.91	134	2970	92.7	93.5	93.6	0.77	0.85	0.89	125
110	150	2975	93.1	94.2	94.4	0.81	0.86	0.89	199	2980	92.9	94.1	94.5	0.76	0.84	0.87	186
132	175	2975	93.8	94.6	94.7	0.83	0.88	0.9	235	2980	93.6	94.7	94.8	0.79	0.86	0.88	220
200	270	2975	95.5	96	96.2	0.81	0.86	0.89	355	2980	95	95.6	96	0.73	0.82	0.86	337

Inverter Duty Motors - Improved Efficiency EFF2

Output		IEC Frame	Full load torque C_n (Nm)	Locked rotor current I_l/I_n	Locked rotor torque T_l/T_n	Break-down torque T_b/T_n	Inertia J kgm²	Allowable locked rotor time Hot/Cold (s)	Weight (kg)	Sound dB (A)	Rated speed (rpm)	400 V						Full load current I_n (A)
												% of full load						
												Efficiency η			Power Factor (Cos φ)			
kW	HP											50	75	100	50	75	100	
IV Pole - 1500 rpm																		
0.12	0.16	63	0.82	3.5	2	2.2	0.00034	30/66	6.6	44	1375	45	54	57	0.49	0.61	0.72	0.422
0.18	0.25	63	1.29	3.4	2	2.2	0.00039	23/51	6.9	44	1360	46	54	58	0.49	0.63	0.74	0.605
0.25	0.33	71	1.77	3.5	1.9	2.1	0.00039	21/46	8.7	43	1310	50	55	59	0.5	0.65	0.76	0.805
0.55	0.75	80	3.74	4.7	2.1	2.2	0.0019	17/37	12.7	44	1410	58.5	66.3	68	0.54	0.7	0.82	1.424
0.75	1	80	5.04	5	2.3	2.2	0.00225	14/31	13.6	44	1395	64.5	71	72	0.55	0.7	0.81	1.856
1.1	1.5	90S	7.42	5.6	2.3	2.4	0.00392	8/18	18.7	49	1420	70	76	77	0.55	0.69	0.79	2.61
1.5	2	90L	9.96	5.5	2.3	2.4	0.00476	8/18	20.1	49	1410	76.5	78.5	79	0.58	0.73	0.82	3.342
2.2	3	100L	14.94	5.6	2.4	2.6	0.00651	9/20	25.8	53	1410	80.5	81.5	81.5	0.6	0.74	0.82	4.751
3	4	100L	20.07	6	2.8	3	0.00842	8/18	29.4	53	1400	80	81	82.6	0.57	0.72	0.81	6.472
4	5.5	112M	26.83	6.2	2.1	2.5	0.01473	13/29	41.6	56	1440	83.5	84.6	85	0.65	0.77	0.83	8.18
5.5	7.5	132S	36.33	6.5	2.1	2.5	0.03489	11/24	54.5	60	1450	84.5	85.6	86	0.63	0.77	0.84	11
7.5	10	132M	48.27	6.7	2.1	2.9	0.04652	8/18	69	60	1455	85	86.5	87	0.63	0.77	0.84	14.8
9.2	12.5	132M	60.34	7.5	2.2	2.8	0.05815	6/13	69.5	60	1455	86.5	87.7	87.7	0.64	0.78	0.85	17.8
11	15	160M	72.41	6	2.3	2.6	0.07528	12/26	95.8	67	1455	86.5	88.5	88.5	0.62	0.74	0.81	22.1
15	20	160L	96.22	5.8	2.3	2.4	0.10539	12/26	123.9	67	1460	88.5	90	89.7	0.68	0.79	0.83	29.1
18.5	25	180M	119.46	7	2.5	3	0.16146	11/24	171.5	64	1470	89.5	90.5	90.5	0.67	0.77	0.84	35.1
22	30	180L	143.84	7	2.7	2.9	0.18837	11/24	173	64	1465	90	91.5	91.2	0.69	0.8	0.85	41
30	40	200M	190.48	6.7	2.5	2.8	0.30338	14/31	233	69	1475	90.3	91.5	92	0.68	0.78	0.84	56
37	50	225S/M	238.1	6.7	2.3	2.8	0.5599	17/37	333.9	70	1475	90.6	91.7	92.2	0.71	0.81	0.86	67.4
45	60	225S/M	285.72	7	2.4	3	0.66488	12/26	379.2	70	1475	91.5	92.4	92.6	0.71	0.8	0.86	81.6
55	75	250S/M	357.15	6.8	2.3	2.7	0.87484	14/31	431.3	70	1475	93	93.3	93.6	0.77	0.85	0.89	95.3
55	75	280S/M	354.75	7.3	2.3	2.8	2.32858	40/88	735	76	1485	91.5	93.5	93.7	0.72	0.81	0.85	99.6
75	100	280S/M	472.99	6.7	2	2.7	1.84681	22/48	719.8	76	1485	92.7	93.8	94.1	0.77	0.84	0.87	132
90	125	280S/M	591.24	7.3	2.4	2.8	2.16799	19/42	701.4	76	1485	93.2	94	94.2	0.77	0.85	0.87	159
90	125	315S/M	591.24	7.1	2.4	2.5	2.56947	31/68	802	77	1485	92.3	93.9	94.2	0.8	0.86	0.88	157
110	150	315S/M	709.49	7.3	2.4	2.8	2.56947	17/37	820.9	77	1485	93.8	94.4	94.4	0.75	0.83	0.86	196
132	175	315S/M	827.74	7.7	2.4	2.8	3.21184	17/37	921.3	77	1485	93.9	94.7	94.8	0.74	0.83	0.86	234
160	220	315S/M	1040.59	7.5	2.5	2.8	3.77391	17/37	995.8	77	1485	94	94.8	95	0.76	0.83	0.86	283
200	270	315B	1277.08	6.8	1.9	2.9	4.0216	33/73	1240	79	1485	93.8	95	95	0.68	0.77	0.81	375
200	270	355M/L	1272.8	6.6	2.3	2.2	6.34151	44/97	1392	79	1490	94.8	95.2	95.4	0.78	0.85	0.87	348
250	340	315B	1613.61	6.2	1.8	2.6	5.1713	29/64	1330	79	1480	94.5	95.2	95.2	0.72	0.8	0.83	457
250	340	355M/L	1602.78	6.9	2.2	2.5	7.57882	36/79	1536.6	79	1490	94.3	95.2	95.8	0.8	0.86	0.88	428
315	430	315B*	2040.75	7.4	2	2.7	5.74514	18/40	1560	79	1480	94.1	95.1	95.2	0.67	0.77	0.82	582
315	430	355M/L	2027.05	6.7	2.2	2.4	9.92464	42/92	1770	79	1490	94.8	95.9	96.2	0.79	0.86	0.88	537
355	482	355M/L*	2272.18	7.9	2.4	2.5	11.6813	28/62	1865	79	1490	95.8	96.3	96.3	0.8	0.87	0.88	605
HIGH-OUTPUT DESIGN																		
0.25	0.33	63	1.64	5	3.1	3.1	0.00067	17/37	8.3	44	1415	52	60	62	0.44	0.54	0.65	0.895
0.37	0.5	71	2.66	3.7	2	2	0.00056	17/37	9.8	43	1320	55	60	62	0.5	0.63	0.76	1.133
0.55	0.75	71	3.8	5	2.8	2.9	0.00096	19/42	11.8	43	1385	66	70.5	72	0.45	0.58	0.68	1.62
1.1	1.5	80	7.61	5	2.3	2.3	0.00328	10/22	16	44	1385	65	68.5	69	0.55	0.7	0.81	2.84
1.5	2	90S	9.96	5.5	2.3	2.4	0.00476	8/18	20.6	49	1410	76.5	78.5	79	0.58	0.73	0.82	3.342
2.2	3	90L	14.94	5.8	2.7	2.5	0.00672	8/18	23.5	49	1410	75	76.5	76.5	0.57	0.71	0.8	5.19
4	5.5	100L*	27.79	6.7	2.6	2.6	0.01072	7/15	34.7	53	1390	81.5	82.2	82	0.64	0.76	0.83	8.483
5.5	7.5	112M*	36.33	6.5	2.5	2.6	0.01875	8/18	46.3	56	1450	84	85.7	85.7	0.54	0.66	0.75	12.4
7.5	10	132S	48.27	6.7	2.1	2.9	0.04652	8/18	62.3	60	1455	85	86.5	87	0.63	0.77	0.84	14.8
11	15	132M/L*	72.41	7.5	2.4	2.7	0.06978	5/11	81.4	60	1455	87	88.4	88	0.7	0.81	0.88	20.5
15	20	160M	96.22	5.8	2.3	2.4	0.10539	12/26	119.3	67	1460	88.5	90	89.7	0.68	0.79	0.83	29.1
18.5	25	160L*	120.69	6	2.4	2.4	0.11542	12/26	130.2	67	1455	88.5	90	90	0.64	0.76	0.82	36.2
22	30	180M	143.84	7	2.7	2.9	0.18837	11/24	197.4	64	1465	90	91.5	91.2	0.69	0.8	0.85	41
30	40	200L	190.48	6.7	2.5	2.8	0.30338	14/31	249.9	69	1475	90.3	91.5	92	0.68	0.78	0.84	56
37	50	200L	238.91	7	2.3	2.5	0.38611	14/31	260	69	1470	91.5	92.5	92.3	0.73	0.82	0.86	67.3
55	75	225S/M	357.15	6.8	2.3	2.7	0.87484	14/31	407.7	70	1475	93	93.3	93.6	0.77	0.85	0.89	95.3
75	100	250S/M	474.59	7.2	2.4	2.6	1.15478	12/26	488	70	1480	92.5	93.6	93.7	0.77	0.85	0.87	133
110	150	280S/M	709.49	7.3	2.4	2.8	2.56947	17/37	755	76	1485	93.8	94.4	94.4	0.75	0.83	0.86	196
132	175	280S/M	827.74	7.7	2.4	2.8	3.21184	17/37	880.6	76	1485	93.9	94.7	94.8	0.74	0.83	0.86	234
200	270	315S/M*	1277.08	7	2.4	2.8	3.77391	10/22	1021.4	77	1485	95	95.4	95.4	0.7	0.8	0.85	356

Notes:
**Class "F" insulation with ΔT105K*
Standard voltage, connection and frequency: 220-240V Δ 50Hz 380-415V Δ 50Hz
380-415V Y 50Hz 660-690V Y 50Hz
The values shown are subject to change without prior notice. To obtain guaranteed values please access our website.

Inverter Duty Motors - Improved Efficiency EFF2

Output		380 V								415 V							
		Rated speed (rpm)	% of full load						Full load current I_n (A)	Rated speed (rpm)	% of full load						Full load current I_n (A)
			Efficiency η			Power Factor (Cos φ)					Efficiency η			Power Factor (Cos φ)			
kW	HP		50	75	100	50	75	100			50	75	100	50	75	100	
IV Pole - 1500 rpm																	
0.12	0.16	1360	47	55	57	0.53	0.65	0.76	0.421	1385	42	51	55	0.45	0.57	0.67	0.457
0.18	0.25	1340	46	54	58	0.54	0.67	0.79	0.597	1370	43	52	56	0.45	0.57	0.68	0.658
0.25	0.33	1280	50	55	56	0.55	0.7	0.8	0.848	1320	43	51	55	0.45	0.58	0.7	0.903
0.55	0.75	1400	61	68	68.2	0.61	0.75	0.86	1.425	1415	58.5	66	67.6	0.51	0.67	0.79	1.433
0.75	1	1380	65	71.5	72	0.61	0.75	0.84	1.884	1405	61	68.4	71	0.5	0.64	0.76	1.934
1.1	1.5	1405	73	76	76.5	0.62	0.75	0.83	2.632	1425	67	75	77	0.49	0.64	0.75	2.65
1.5	2	1400	78.5	79	79	0.65	0.78	0.86	3.354	1415	74.5	78	79	0.52	0.67	0.77	3.431
2.2	3	1400	80.5	81	80.5	0.67	0.79	0.85	4.885	1420	79	81	81.5	0.55	0.68	0.78	4.815
3	4	1390	81.5	82	81.9	0.64	0.77	0.84	6.625	1410	78	81	82.6	0.52	0.67	0.78	6.478
4	5.5	1430	84.3	85	84.5	0.71	0.81	0.86	8.36	1445	82	84	85	0.59	0.72	0.8	8.18
5.5	7.5	1445	85.5	86	85.6	0.7	0.81	0.86	11.4	1455	83.2	85	85.7	0.58	0.72	0.81	11
7.5	10	1450	86.5	86.8	86.8	0.71	0.82	0.87	15.1	1455	83.2	85.7	86.7	0.57	0.72	0.8	15
9.2	12.5	1450	87.3	87.8	87.4	0.7	0.82	0.87	18.4	1455	85.3	87.1	87.5	0.59	0.73	0.82	17.8
11	15	1455	87	88.5	88	0.68	0.79	0.83	22.9	1460	85.5	87.5	88	0.57	0.7	0.78	22.3
15	20	1455	89	89.5	89.3	0.72	0.82	0.85	30	1465	88	90	89.7	0.64	0.75	0.82	28.4
18.5	25	1465	90	90.5	90.2	0.71	0.81	0.85	36.7	1470	88.5	90	90.5	0.62	0.74	0.81	35.1
22	30	1460	90.6	91.3	90.7	0.73	0.82	0.86	42.9	1470	89.5	91	91	0.64	0.76	0.82	41
30	40	1470	91	92	91.6	0.73	0.81	0.85	58.5	1475	89.5	91	91.5	0.63	0.75	0.81	56.3
37	50	1470	91	91.8	92.1	0.75	0.83	0.87	70.2	1475	90	91.5	92	0.67	0.77	0.83	67.4
45	60	1475	92	92.4	92.4	0.74	0.83	0.87	85.1	1480	91	92.3	92.5	0.66	0.77	0.83	81.5
55	75	1470	92.9	93	93.2	0.79	0.86	0.9	99.6	1475	92.7	93	93.5	0.75	0.83	0.87	94.1
55	75	1480	91	93	93.5	0.75	0.84	0.87	102.728	1485	91.5	93.6	93.8	0.7	0.8	0.84	97.1
75	100	1480	92.9	93.6	94	0.8	0.86	0.88	138	1485	92.5	93.8	94	0.75	0.83	0.86	129
90	125	1480	93.3	94	94.2	0.8	0.86	0.88	165	1485	93	94	94.3	0.75	0.83	0.86	154
90	125	1480	92.6	94.1	94.2	0.82	0.87	0.89	163	1485	92	93.9	94.2	0.78	0.85	0.88	151
110	150	1480	93.9	94.2	94.2	0.77	0.85	0.87	204	1485	93.6	94.3	94.4	0.72	0.81	0.85	191
132	175	1485	94.1	94.6	94.7	0.77	0.84	0.87	243	1485	93.8	94.7	94.8	0.71	0.81	0.85	228
160	220	1485	94	94.7	94.8	0.78	0.85	0.87	295	1485	93.7	94.7	94.9	0.73	0.82	0.86	273
200	270	1480	94.2	95.1	95	0.72	0.8	0.82	390	1485	93.4	94.8	95	0.64	0.74	0.8	366
200	270	1485	94.8	95	95.2	0.8	0.86	0.88	363	1490	94.5	95.1	95.3	0.76	0.84	0.86	339
250	340	1480	95	95.4	95.2	0.76	0.83	0.85	469	1485	94	95	95.1	0.67	0.77	0.81	452
250	340	1485	94.5	95.2	95.7	0.82	0.87	0.89	446	1490	94.1	95	95.7	0.77	0.85	0.87	418
315	430	1480	94.6	95.3	95.3	0.73	0.81	0.84	598	1485	93.5	94.7	95	0.62	0.73	0.8	577
315	430	1485	95	95.8	96.1	0.83	0.87	0.89	560	1490	94.5	95.8	96.2	0.76	0.84	0.87	524
355	482	1490	95.9	96.2	96.2	0.82	0.88	0.89	630	1490	95.7	96.3	96.3	0.78	0.86	0.88	583
HIGH-OUTPUT DESIGN																	
0.25	0.33	1405	54	61	63	0.49	0.6	0.7	0.861	1420	49	58	61	0.41	0.51	0.6	0.95
0.37	0.5	1300	57	60	62	0.52	0.67	0.78	1.162	1340	52	57	60	0.44	0.55	0.68	1.262
0.55	0.75	1370	69	72	72.5	0.51	0.63	0.72	1.6	1400	62	68	71	0.42	0.53	0.64	1.68
1.1	1.5	1370	68	69	69.5	0.61	0.76	0.86	2.8	1400	60	66	67	0.5	0.65	0.76	3.01
1.5	2	1400	78.5	79	79	0.65	0.78	0.86	3.354	1415	74.5	78	79	0.52	0.67	0.77	3.431
2.2	3	1390	76	77	76	0.65	0.75	0.83	5.3	1420	73	76	76.5	0.53	0.66	0.76	5.26
4	5.5	1380	82	82	81	0.69	0.8	0.85	8.827	1400	81	82.1	82.5	0.6	0.73	0.81	8.327
5.5	7.5	1445	85	86	85.7	0.6	0.72	0.79	12.3	1455	82	85.7	85.7	0.49	0.62	0.71	12.6
7.5	10	1450	86.5	86.8	86.8	0.71	0.82	0.87	15.1	1455	83.2	85.7	86.7	0.57	0.72	0.8	15
11	15	1450	87.5	88.4	88	0.75	0.84	0.89	21.4	1460	86.5	88.4	88.4	0.67	0.79	0.86	20.1
15	20	1455	89	89.5	89.3	0.72	0.82	0.85	30	1465	88	90	89.7	0.64	0.75	0.82	28.4
18.5	25	1450	89	90	89.4	0.7	0.8	0.84	37.4	1460	88	90	90	0.6	0.73	0.8	35.7
22	30	1460	90.6	91.3	90.7	0.73	0.82	0.86	42.9	1470	89.5	91	91	0.64	0.76	0.82	41
30	40	1470	91	92	91.6	0.73	0.81	0.85	58.5	1475	89.5	91	91.5	0.63	0.75	0.81	56.3
37	50	1465	92	92.5	92	0.77	0.84	0.87	70.2	1475	91	92.5	92.5	0.69	0.8	0.85	65.5
55	75	1470	92.9	93	93.2	0.79	0.86	0.9	99.6	1475	92.7	93	93.5	0.75	0.83	0.87	94.1
75	100	1475	92.6	93.4	93.5	0.8	0.86	0.88	138	1480	92.6	93.7	93.6	0.74	0.84	0.87	128
110	150	1480	93.9	94.2	94.2	0.77	0.85	0.87	204	1485	93.6	94.3	94.4	0.72	0.81	0.85	191
132	175	1485	94.1	94.6	94.7	0.77	0.84	0.87	243	1485	93.8	94.7	94.8	0.71	0.81	0.85	228
200	270	1485	95.1	95.4	95.3	0.74	0.82	0.86	371	1485	94.8	95.3	95.3	0.68	0.78	0.83	352

Inverter Duty Motors - Improved Efficiency EFF2

Output		IEC Frame	Full load torque C_n (Nm)	Locked rotor current I_l/I_n	Locked rotor torque T_l/T_n	Break-down torque T_b/T_n	Inertia J kgm²	Allowable locked rotor time Hot/Cold (s)	Weight (kg)	Sound dB (A)	Rated speed (rpm)	400 V						Full load current I_n (A)
												% of full load						
												Efficiency η			Power Factor (Cos φ)			
kW	HP											50	75	100	50	75	100	
VI Pole - 1000 rpm																		
0.12	0.16	63	1.31	2.6	1.7	1.6	0.00051	46/101	8.1	43	855	40.7	46.7	45.5	0.49	0.6	0.71	0.536
0.18	0.25	71	1.94	3.3	2	2.2	0.00079	50/110	9.6	43	905	46	54	57	0.46	0.55	0.62	0.735
0.25	0.33	71	2.58	3.5	2.2	2.2	0.00096	43/95	11.3	43	900	53	60.5	64	0.4	0.5	0.57	0.989
0.37	0.5	80	3.88	3.6	1.7	1.7	0.0019	16/35	12.6	43	905	55	60	63	0.5	0.64	0.75	1.13
0.55	0.75	80	5.66	4.5	2.3	2.3	0.00311	10/22	14.8	43	930	60	65	67	0.5	0.63	0.73	1.62
0.75	1	90S	7.72	4.2	1.9	2	0.00448	16/35	19.2	45	910	71	73	72.4	0.55	0.69	0.79	1.89
1.1	1.5	90L	11.39	4.8	2.7	2.7	0.00616	9/20	22.4	45	925	72.5	74	72.5	0.47	0.6	0.72	3.042
1.5	2	100L	15.44	4.1	2	2.2	0.00897	17/37	25.8	44	910	74.5	77.5	76	0.51	0.65	0.73	3.902
2.2	3	112M	22.42	5	2.2	2.3	0.01682	14/31	34.5	48	940	77.5	80.5	80.1	0.53	0.66	0.74	5.36
3	4	132S	29.27	5.3	2	2.2	0.03489	20/44	50.7	52	960	80	82.7	82.5	0.58	0.7	0.77	6.82
4	5.5	132M	40.24	5.8	2.3	2.4	0.04458	19/42	57.3	52	960	81.5	83.6	84.2	0.54	0.66	0.74	9.27
5.5	7.5	132M	54.87	6.4	2.7	2.8	0.05814	15/33	66.6	52	960	82.5	84.8	85.8	0.49	0.62	0.71	13
7.5	10	160M	72.79	5.7	2.2	2.5	0.10773	11/24	99.9	56	965	86	87.5	87	0.64	0.76	0.83	15
9.2	12.5	160L	90.98	6	2	2.6	0.12928	10/22	112.6	56	965	86.5	87.5	87	0.63	0.75	0.82	18.6
11	15	160L	109.18	6	2.2	2.6	0.158	11/24	124.5	56	965	87.5	88.5	88	0.65	0.77	0.83	21.7
15	20	180M	144.08	7.5	2.3	2.7	0.26201	7/15	163	56	975	88	89	89	0.76	0.84	0.88	27.6
18.5	25	200L	180.1	6	2.1	2.5	0.34083	11/24	213	58	975	89	90.5	90.2	0.64	0.76	0.82	36.1
22	30	200L	216.12	6	2.3	2.4	0.41258	14/31	234.6	58	975	89	90.9	91.3	0.7	0.79	0.84	41.4
30	40	225S/M	285.24	7.2	2.6	2.7	0.98842	20/44	366.8	61	985	90.5	91.8	91.8	0.77	0.84	0.87	54.2
37	50	250S/M	358.37	7.5	2.7	2.6	1.22377	18/40	428.5	61	980	90.2	92.4	92.5	0.77	0.85	0.87	66.4
45	60	280S/M	427.86	6.8	2.4	2.6	2.06842	24/53	598.3	66	985	90.5	92.3	92.6	0.68	0.78	0.83	84.5
55	75	280S/M	534.82	6.5	2.3	2.5	2.41316	23/51	614.3	66	985	91.6	93.2	93.5	0.71	0.82	0.85	100
75	100	315S/M	713.09	6.7	2.3	2.5	3.21755	20/44	788.4	69	985	91.6	93.5	93.7	0.71	0.81	0.85	136
90	125	315S/M	891.37	6.3	2.1	2.3	3.67719	18/40	800.1	69	985	92.5	94	93.9	0.71	0.81	0.85	163
110	150	315S/M	1069.64	6.4	2.3	2.4	4.82632	18/40	945.3	69	985	93.4	94.4	94.5	0.71	0.8	0.84	200
132	175	315S/M*	1247.91	6.3	2.1	2.2	5.28596	13/29	987.2	69	985	93.5	94.7	94.7	0.72	0.81	0.85	237
160	220	315B	1560.88	7	1.9	2.5	7.1	25/55	1350	69	990	93.5	94.9	94.9	0.68	0.78	0.82	297
160	220	355M/L	1560.88	6.2	1.9	2.1	9.53128	72/158	1485	73	990	93	95	95.3	0.67	0.77	0.82	295
200	270	315B	1915.63	6.6	2	2.6	8.6038	19/42	1419	69	990	94.8	95.2	95	0.71	0.8	0.84	362
200	270	355M/L	1915.63	6.3	2.1	2.3	12.39067	87/187	1700	73	990	93.5	94.5	94.8	0.7	0.78	0.81	376
250	340	315B*	2412.27	6.8	2.2	2.7	10.707	16/35	1682	69	990	95.1	95.5	95.2	0.73	0.82	0.85	446
250	340	355M/L	2400.15	6.1	2.2	2.2	14.77349	64/141	1830	73	995	94	95.1	95.6	0.7	0.79	0.82	460
280	380	315B*	2696.07	7.4	2.2	2.7	11.472	12/26	1800	69	990	95	95.4	95.4	0.7	0.8	0.84	504
280	380	355M/L	2696.07	6	2.1	2.2	14.77349	54/119	1830	73	990	94.3	95.2	95.4	0.68	0.77	0.8	530
315	430	355M/L*	3050.81	6	1.9	1.9	15.48834	38/84	1950	73	990	94.3	95.8	95.9	0.69	0.78	0.81	585
HIGH-OUTPUT DESIGN																		
3	4	112M	29.27	6.3	2.6	2.6	0.02617	10/22	45.8	48	960	78.5	81.7	84	0.53	0.65	0.73	7.06
4	5.5	132S	40.24	5.8	2.3	2.4	0.04458	19/42	59.4	52	960	81.5	83.6	84.2	0.54	0.66	0.74	9.27
15	20	180L	144.08	7.5	2.3	2.7	0.26201	7/15	161.3	56	975	88	89	89	0.76	0.84	0.88	27.6
18.5	25	200M	180.1	6	2.1	2.5	0.34083	11/24	213	58	975	89	90.5	90.2	0.64	0.76	0.82	36.1
37	50	225S/M	358.37	7.5	2.7	2.6	1.22377	18/40	440	61	980	90.2	92.4	92.5	0.77	0.85	0.87	66.4
45	60	250S/M	430.04	8	2.8	2.8	1.55324	18/40	482.7	61	980	91	92.3	92.6	0.76	0.84	0.87	79.7
75	100	280S/M	713.09	6.7	2.3	2.5	3.21755	20/44	725.9	66	985	91.6	93.5	93.7	0.71	0.81	0.85	136

Notes:
**Class "F" insulation with ΔT105K*
Standard voltage, connection and frequency: 220-240V Δ 50Hz 380-415V Δ 50Hz
380-415V Y 50Hz 660-690V Y 50Hz
The values shown are subject to change without prior notice. To obtain guaranteed values please access our website.

Inverter Duty Motors - Improved Efficiency EFF2

Output		380 V								415 V							
		Rated speed (rpm)	% of full load						Full load current I_n (A)	Rated speed (rpm)	% of full load						Full load current I_n (A)
			Efficiency η			Power Factor (Cos φ)					Efficiency η			Power Factor (Cos φ)			
kW	HP		50	75	100	50	75	100			50	75	100	50	75	100	
VI Pole - 1000 rpm																	
0.12	0.16	845	46.2	50.6	47.6	0.52	0.64	0.76	0.504	860	36.2	42.8	43.2	0.48	0.57	0.67	0.577
0.18	0.25	895	49	55.5	57.5	0.49	0.59	0.65	0.732	910	43	52	56.5	0.44	0.52	0.59	0.751
0.25	0.33	890	56	63	65.3	0.44	0.55	0.61	0.954	905	50	58	62.5	0.37	0.46	0.54	1.03
0.37	0.5	890	57	62	65	0.54	0.69	0.8	1.08	910	55	60	62	0.47	0.6	0.72	1.15
0.55	0.75	920	62	65.8	68	0.54	0.67	0.77	1.6	935	58	64	66	0.47	0.59	0.68	1.7
0.75	1	895	70	72	72	0.61	0.75	0.83	1.91	915	70	71	71	0.52	0.66	0.76	1.93
1.1	1.5	915	73.2	76.4	75.6	0.52	0.67	0.77	2.871	930	71.3	71.4	72.5	0.42	0.55	0.67	3.15
1.5	2	900	73.6	78.5	79	0.57	0.7	0.77	3.747	920	74.2	75.9	74.2	0.46	0.6	0.69	4.076
2.2	3	930	79	80.8	79.7	0.58	0.7	0.76	5.52	950	76	80.3	80.5	0.5	0.63	0.72	5.28
3	4	955	81	83	82	0.61	0.72	0.79	7.04	965	79	82.5	82.6	0.53	0.66	0.74	6.83
4	5.5	960	82.7	84.2	84	0.58	0.73	0.78	9.28	965	80	82.9	83.9	0.52	0.64	0.72	9.21
5.5	7.5	960	84.2	85.5	85.7	0.56	0.69	0.75	13	965	81	83.7	85.4	0.45	0.57	0.66	13.6
7.5	10	960	86	86.5	86	0.69	0.8	0.85	15.6	965	85	86.5	86.5	0.61	0.73	0.8	15.1
9.2	12.5	960	87	87	86.5	0.68	0.79	0.84	19.2	970	86	87.5	87	0.59	0.72	0.8	18.4
11	15	960	88	88	87.5	0.7	0.8	0.85	22.5	970	87	88.6	88.2	0.61	0.74	0.81	21.4
15	20	970	88	88.5	88.5	0.8	0.86	0.89	28.9	975	88	89	89	0.73	0.82	0.87	27
18.5	25	975	89.5	90	90	0.69	0.8	0.84	37.2	980	88	90	90	0.6	0.73	0.8	35.7
22	30	970	89.6	91	91.2	0.74	0.82	0.85	43.1	980	88.4	90.7	91.3	0.66	0.76	0.82	40.9
30	40	980	91	91.8	91.6	0.8	0.86	0.88	56.5	985	90	91.8	92.2	0.73	0.81	0.86	52.6
37	50	980	90.5	92.5	92.4	0.8	0.86	0.88	69.1	985	89.5	92.4	92.6	0.73	0.82	0.86	64.6
45	60	985	91	92.3	92.6	0.72	0.81	0.85	86.9	990	90	92.3	92.7	0.64	0.76	0.82	82.4
55	75	985	92	93.2	93.4	0.74	0.84	0.87	103	990	91.2	93.2	93.6	0.68	0.8	0.84	97.3
75	100	985	92	93.5	93.5	0.74	0.82	0.86	142	990	91.2	93.5	93.8	0.69	0.8	0.84	132
90	125	985	92.8	93.9	93.6	0.74	0.83	0.86	170	990	92.2	93.9	93.9	0.69	0.79	0.84	159
110	150	985	93.6	94.3	94.3	0.74	0.82	0.85	208	985	93.2	94.5	94.6	0.69	0.79	0.83	195
132	175	980	93.7	94.5	94.4	0.75	0.83	0.86	247	985	93.3	94.7	94.7	0.7	0.8	0.84	231
160	220	990	94	94.9	94.7	0.72	0.81	0.84	306	990	93	94.9	94.9	0.64	0.75	0.8	293
160	220	990	93.5	95.2	95.2	0.73	0.8	0.84	304	990	92.5	94.9	95.4	0.63	0.74	0.8	292
200	270	990	95.1	95.3	94.9	0.75	0.82	0.85	377	990	94.4	95.1	95	0.67	0.78	0.83	353
200	270	990	94	94.7	94.8	0.74	0.81	0.83	386	990	93	94.3	94.8	0.66	0.75	0.79	372
250	340	990	95.4	95.6	95.1	0.77	0.84	0.87	459	990	94.8	95.4	95.2	0.7	0.8	0.83	440
250	340	995	94.3	95.2	95.5	0.74	0.81	0.83	479	995	93.7	95	95.8	0.67	0.77	0.81	448
280	380	985	95.4	95.6	95.2	0.75	0.83	0.86	520	990	94.6	95.2	95.3	0.66	0.77	0.82	498
280	380	985	94.7	95.3	95.4	0.73	0.8	0.81	551	990	93.9	95.1	95.3	0.64	0.74	0.79	517
315	430	985	94.8	96	95.8	0.73	0.8	0.82	609	990	93.8	95.6	95.8	0.65	0.76	0.8	572
HIGH-OUTPUT DESIGN																	
3	4	955	80	82	83.9	0.59	0.7	0.76	7.15	965	76.5	81.4	84	0.48	0.6	0.69	7.2
4	5.5	960	82.7	84.2	84	0.58	0.73	0.78	9.28	965	80	82.9	83.9	0.52	0.64	0.72	9.21
15	20	970	88	88.5	88.5	0.8	0.86	0.89	28.9	975	88	89	89	0.73	0.82	0.87	27
18.5	25	975	89.5	90	90	0.69	0.8	0.84	37.2	980	88	90	90	0.6	0.73	0.8	35.7
37	50	980	90.5	92.5	92.4	0.8	0.86	0.88	69.1	985	89.5	92.4	92.6	0.73	0.82	0.86	64.6
45	60	980	91.5	92.3	92.5	0.79	0.86	0.88	83	985	90.5	92.3	92.7	0.73	0.82	0.86	77.6
75	100	985	92	93.5	93.5	0.74	0.82	0.86	142	990	91.2	93.5	93.8	0.69	0.8	0.84	132

Inverter Duty Motors - Improved Efficiency EFF2

Output		IEC Frame	Full load torque C_n (Nm)	Locked rotor current I_l/I_n	Locked rotor torque T_l/T_n	Break-down torque T_b/T_n	Inertia J kgm²	Allowable locked rotor time Hot/Cold (s)	Weight (kg)	Sound dB (A)	Rated speed (rpm)	400 V						Full load current I_n (A)
												% of full load						
												Efficiency η			Power Factor (Cos φ)			
kW	HP											50	75	100	50	75	100	
VIII Pole - 750 rpm																		
0.12	0.16	71	1.7	2.2	2.1	2	0.00079	84/185	10.7	41	660	36.3	43.4	45.6	0.37	0.45	0.53	0.717
0.18	0.25	80	2.53	2.8	2.2	2.4	0.00208	29/64	12.9	42	695	36.2	44.1	48.6	0.45	0.53	0.62	0.862
0.25	0.33	80	3.31	3.5	2.3	2.2	0.00277	24/53	14.5	42	700	46.1	53.6	56.6	0.42	0.52	0.61	1.045
0.37	0.5	90S	5.13	3	1.9	1.8	0.00392	32/70	18.2	43	685	50.6	56.5	57.4	0.44	0.55	0.64	1.454
0.55	0.75	90L	7.8	3.3	1.9	2	0.00561	25/55	21.3	43	675	58	60	60	0.43	0.56	0.66	2.005
0.75	1	100L	9.96	3.5	1.8	2.4	0.00785	33/73	24.2	50	705	62	67.2	67.8	0.42	0.53	0.62	2.575
1.1	1.5	100L	15.05	4	1.7	2.3	0.01177	27/59	30.2	50	700	69.3	72.3	71.2	0.45	0.57	0.66	3.379
1.5	2	112M	20.07	4.2	2.2	2.2	0.01776	26/57	44.4	46	700	73.7	75.4	73.5	0.48	0.61	0.7	4.208
2.2	3	132S	29.68	6.1	2.5	2.8	0.06023	22/48	67.6	48	710	75.8	78	77.1	0.55	0.68	0.77	5.349
3	4	132M	39.57	6.1	2.2	2.6	0.07277	18/40	75.3	48	710	78.5	80.1	79	0.55	0.68	0.76	7.212
4	5.5	160M	53.29	4.7	2.2	2.4	0.10055	18/40	96.6	51	725	80	82	82	0.5	0.63	0.72	9.78
5.5	7.5	160M	72.66	4.8	2.2	2.3	0.12209	18/40	105.7	51	725	81	83	83.5	0.48	0.62	0.71	13.4
7.5	10	160L	96.88	4.7	2.2	2.3	0.15082	16/35	121.2	51	725	83	85	85.5	0.5	0.64	0.73	17.3
9.2	12.5	180M	120.27	6.7	2.2	2.9	0.23443	11/24	163	51	730	83	86	85.9	0.64	0.75	0.81	19.1
11	15	180L	145.32	6.8	2.3	2.5	0.2758	11/24	164.9	51	725	87	88.5	88.3	0.68	0.79	0.84	21.4
15	20	200L	192.44	4.6	2	2.1	0.3767	23/51	228.7	53	730	86.5	88.6	89	0.56	0.68	0.75	32.4
18.5	25	225S/M	240.55	6.9	2.1	2.8	0.84722	17/37	338.7	56	730	88.5	90.1	90	0.72	0.8	0.85	34.9
22	30	225S/M	288.66	7.5	2.2	2.7	0.98842	19/42	363.9	56	730	89	91	91	0.73	0.82	0.85	41.1
30	40	250S/M	384.87	7.9	2.3	2.9	1.22377	17/37	425.2	56	730	89.5	91.2	91.6	0.7	0.79	0.84	56.3
37	50	280S/M	474.59	6.5	1.9	2.3	2.06842	29/64	595.5	59	740	90.5	92.2	92.3	0.67	0.77	0.81	71.4
45	60	280S/M	569.51	6.5	2	2.4	2.52807	26/57	635.4	59	740	90.5	92.1	92.3	0.65	0.75	0.8	88
55	75	315S/M	711.89	6.5	1.9	2.2	3.10263	27/59	731.9	62	740	91.2	93.1	93	0.69	0.78	0.82	104
75	100	315S/M	949.18	6.6	1.9	2.2	4.36666	20/44	872	62	740	92	93.4	93.5	0.67	0.79	0.82	141
90	125	315S/M	1186.48	6.8	2.1	2.4	5.28597	23/51	1020.9	62	740	92.5	93.8	94.2	0.7	0.78	0.83	166
110	150	355M/L	1423.78	6.4	1.5	2.2	11.9324	41/90	1390	70	740	92.5	94.1	94.5	0.63	0.74	0.8	210
132	175	315B	1661.07	6.9	1.9	2.6	7.765	20/44	1399	62	740	94	94.5	94.4	0.63	0.74	0.79	255
132	175	355M/L	1661.07	6.5	1.6	2.2	13.18845	47/103	1445	70	740	93	94.5	94.8	0.63	0.73	0.79	254
160	220	315B	2088.2	7.3	2.1	2.8	9.75	18/40	1534	62	740	93.1	94.7	94.7	0.6	0.72	0.77	317
160	220	355M/L	2088.2	6.6	1.6	2.2	16.32856	42/92	1620	70	740	93.3	94.7	94.7	0.64	0.75	0.8	305
200	270	315B*	2562.8	6.5	1.6	2.3	11.472	18/40	1750	62	740	94.4	94.8	94.4	0.7	0.79	0.82	373
200	270	355M/L	2562.8	6.8	1.6	2.1	19.46866	37/81	1830	70	740	93.3	94.6	95.2	0.6	0.72	0.79	384
HIGH-OUTPUT DESIGN																		
7.5	10	160M	96.88	4.7	2.2	2.3	0.15082	16/35	123	51	725	83	85	85.5	0.5	0.64	0.73	17.3
30	40	225S/M	384.87	7.9	2.3	2.9	1.22377	17/37	440	56	730	89.5	91.2	91.6	0.7	0.79	0.84	56.3
37	50	250S/M	481.09	8.2	2.3	2.8	1.55324	13/29	477.3	56	730	89	91.5	91.5	0.68	0.78	0.84	69.5
45	60	250S/M*	577.31	8.3	2.5	3.4	1.69445	8/18	530	56	730	90	91	91.5	0.67	0.78	0.83	85.5
55	75	280S/M	711.89	6.5	1.9	2.2	3.10263	27/59	680.4	59	740	91.2	93.1	93	0.69	0.78	0.82	104
110	150	315S/M*	1423.78	7	1.9	2.2	5.6307	14/31	1031.9	62	740	92.5	94.1	94.8	0.61	0.73	0.79	212

Notes:
**Class "F" insulation with ΔT105K*
Standard voltage, connection and frequency: 220-240V Δ 50Hz 380-415V Δ 50Hz
380-415V Y 50Hz 660-690V Y 50Hz
The values shown are subject to change without prior notice. To obtain guaranteed values please access our website.

Inverter Duty Motors - Improved Efficiency EFF2

Output		380 V								415 V							
		Rated speed (rpm)	% of full load						Full load current I_n (A)	Rated speed (rpm)	% of full load						Full load current I_n (A)
			Efficiency η			Power Factor (Cos φ)					Efficiency η			Power Factor (Cos φ)			
kW	HP		50	75	100	50	75	100			50	75	100	50	75	100	
VIII Pole - 750 rpm																	
0.12	0.16	650	41	47.1	47.6	0.39	0.48	0.57	0.672	670	32.7	40.3	43.2	0.36	0.43	0.5	0.773
0.18	0.25	690	40.7	47.7	50.6	0.47	0.57	0.66	0.819	700	32.8	41.2	46.1	0.43	0.51	0.59	0.921
0.25	0.33	690	49	55.6	57.2	0.45	0.56	0.65	1.022	700	43.1	51.7	55.6	0.4	0.5	0.58	1.079
0.37	0.5	680	54.4	59	58.3	0.48	0.6	0.69	1.397	690	46.6	53.8	56.1	0.41	0.51	0.61	1.504
0.55	0.75	665	61.7	62	60	0.47	0.6	0.7	1.99	680	54.8	59	59	0.41	0.52	0.62	2.092
0.75	1	695	65.6	69	68	0.46	0.58	0.66	2.539	710	58.3	64.6	66.7	0.39	0.49	0.58	2.697
1.1	1.5	690	72.1	73.6	70.8	0.5	0.62	0.7	3.372	705	66.2	70.7	70.7	0.41	0.53	0.62	3.491
1.5	2	690	75.9	76.2	73.2	0.52	0.65	0.73	4.265	705	71.6	74.2	73.1	0.44	0.57	0.66	4.325
2.2	3	705	77.1	78.3	76.7	0.6	0.73	0.8	5.447	715	74.7	77.5	77.1	0.52	0.65	0.74	5.364
3	4	705	79.7	80.5	78.6	0.6	0.73	0.8	7.249	715	77.1	79.6	79	0.51	0.64	0.73	7.237
4	5.5	720	81	83	82	0.54	0.67	0.75	9.88	725	78.5	82	82.5	0.46	0.6	0.69	9.78
5.5	7.5	720	82	84	83	0.54	0.67	0.74	13.6	725	80	82.5	83	0.45	0.58	0.68	13.6
7.5	10	715	84	85	85	0.56	0.69	0.76	17.6	725	81	84	85.5	0.47	0.6	0.7	17.4
9.2	12.5	725	84	86.1	85.5	0.69	0.79	0.84	19.5	730	82	85.9	85.9	0.59	0.72	0.79	18.9
11	15	720	87.5	88.3	87.8	0.71	0.81	0.85	22.4	730	86.5	88.6	88.5	0.65	0.77	0.83	20.8
15	20	725	87.5	88.9	88.9	0.61	0.72	0.77	33.3	730	85.5	88.3	88.9	0.5	0.64	0.72	32.6
18.5	25	730	88.8	90	89.8	0.75	0.83	0.86	36.4	735	88.2	90.3	90.2	0.68	0.78	0.84	34
22	30	730	89.4	90.9	90.5	0.76	0.84	0.86	42.9	735	88.6	91	91.2	0.71	0.8	0.84	40
30	40	730	90	91.3	91.3	0.73	0.81	0.85	58.7	735	89	91.1	91.8	0.66	0.77	0.83	54.8
37	50	735	91	92.2	92.1	0.7	0.79	0.82	74.4	740	90	92.2	92.4	0.64	0.75	0.79	70.5
45	60	735	91	92.2	92	0.7	0.77	0.82	90.6	740	90	92	92.3	0.6	0.72	0.78	87
55	75	735	91.6	93.2	92.8	0.72	0.8	0.83	108	740	90.7	93	93	0.65	0.76	0.8	103
75	100	735	92.4	93.3	93.3	0.7	0.8	0.83	147	740	91.6	93.4	93.4	0.64	0.78	0.81	138
90	125	735	92.9	93.9	94	0.73	0.81	0.84	173	740	92.1	93.7	94.2	0.67	0.75	0.81	164
110	150	740	93	94.2	94.5	0.66	0.77	0.82	216	745	92	94.1	94.5	0.6	0.71	0.78	208
132	175	740	94.6	94.8	94.3	0.68	0.77	0.81	263	745	93.4	94.2	94.4	0.59	0.71	0.77	253
132	175	740	93.5	94.6	94.8	0.66	0.75	0.81	261	745	92.5	94.4	94.8	0.6	0.71	0.77	252
160	220	740	93.6	94.9	94.6	0.66	0.75	0.79	325	745	92.5	94.7	94.7	0.56	0.68	0.75	313
160	220	740	93.8	94.8	94.8	0.68	0.77	0.81	317	745	92.8	94.7	94.7	0.6	0.72	0.79	298
200	270	735	94.3	94.7	94.7	0.73	0.81	0.83	387	740	94.1	94.7	94.3	0.67	0.77	0.8	369
200	270	740	93.8	94.8	95.1	0.65	0.75	0.81	394	745	92.8	94.4	95.2	0.56	0.69	0.77	380
HIGH-OUTPUT DESIGN																	
7.5	10	715	84	85	85	0.56	0.69	0.76	17.6	725	81	84	85.5	0.47	0.6	0.7	17.4
30	40	730	90	91.3	91.3	0.73	0.81	0.85	58.7	735	89	91.1	91.8	0.66	0.77	0.83	54.8
37	50	730	89.5	91.5	91	0.72	0.82	0.86	71.8	735	88.5	91.5	91.5	0.64	0.76	0.82	68.6
45	60	730	90.5	91	91.2	0.69	0.8	0.85	88.2	735	89.5	91	91.6	0.65	0.76	0.82	83.3
55	75	735	91.6	93.2	92.8	0.72	0.8	0.83	108	740	90.7	93	93	0.65	0.76	0.8	103
110	150	735	93	94.1	94.8	0.66	0.75	0.8	220	740	92	94.1	94.8	0.56	0.71	0.77	210

Inverter Duty Motors Cast Iron Frame

Mechanical Data

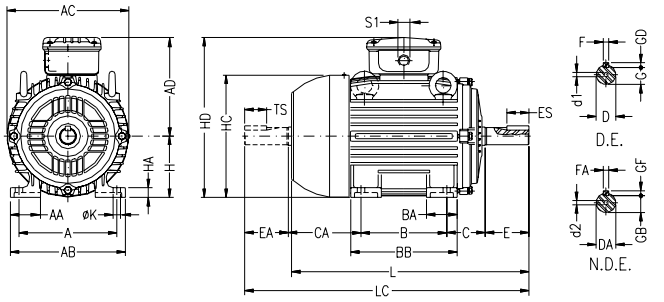

Standard Frame

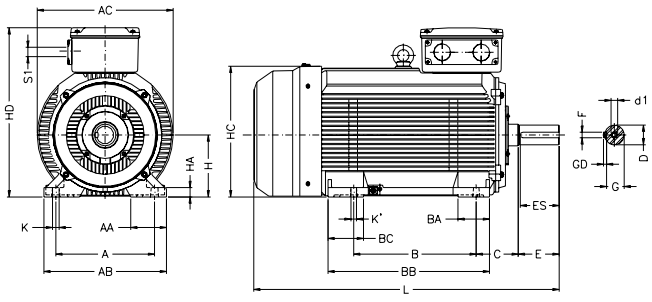

315B Frame

IEC FRAME	A	AA	AB	AC	AD	B	BA	BB	C	CA	SHAFT DIMENSIONS												H	HA	HC	HD	K	L	LC	S1	d1	d2	BEARINGS	
											D	E	ES	F	G	GD	DA	EA	TS	FA	GB	GF											D.E.	N.D.E.
63	100	21	116	125	119	80	22	95	40	78	11j6	23	14	4	8.5	4	9j6	20	12	3	7.2	3	63	8	124	182	7	216	241	2xM20x1.5	EM4	EM3	6201-ZZ	
71	112	36	132	141	127	90	38	113.5	45	88	14j6	30	18	5	11	5	11j6	23	14	4	8.5	4	71	12	139	198		248	276		DM5	EM4	6203-ZZ	6202-ZZ
80	125	35	149	159	136	100	40	125.5	50	93	19j6	40	28	6	15.5	6	14j6	30	18	5	11	5	80	13	157	216	10	276	313		DM6	DM4	6204-ZZ	6203-ZZ
90S	140	38	164	179	155	125	42	131	56	104	24j6	50	36	8	20	7	16j6	40	28	5	13	5	90	15	177	245		304	350	2xM25x1.5	DM8	DM6	6205-ZZ	6204-ZZ
90L								156																				329	375					
100L	160	49	188	199	165	140	50	173	63	118	28j6	60	45		24		22j6	50	36	6	18.5	6	100	16	198	265	12	376	431		DM10	DM8	6206-ZZ	6205-ZZ
112M	190	48	220	222	184			177	70	128							24j6			8	20	7	112	18.5	235	296		393	448				6307-ZZ	6206-ZZ
132S	216	51	248	270	212	178	55	197	89	150	38k6	80	63	10	33	8	28j6	60	45		24		132	20	274	344		452	519	2xM32x1.5	DM12	DM10	6308-ZZ	6207-ZZ
132M								225																				490	557					
160M	254	64	308	312	255	210	65	254	108	174	42k6	110	80	12	37	8	42k6	110	80	12	37	8	160	22	317	415	14.5	598	712	2xM40x1.5	DM16		6309-C3	6209-Z-C3
160L						254		298																				642	756					
180M	279	80	350	358	275	241	75	294	121	200	48k6			14	42.5	9	48k6			14	42.5	9	180	28	360	455		664	782				6311-C3	6211-Z-C3
180L						279		332																				702	820					
200M	318	82	385	396	300	267	85	318	133	222	55m6			16	49	10							200	30	402	500	18.5	729	842	2xM50x1.5	M20		6312-C3	6212-Z-C3
200L						305		370																				767	880					
225S/M	356	80	436	478	373	286	105	391	149	280	55m6*		100				55m6*		100	16	49	10	225	34	466	598		817	935				6314-C3	
						311		368		255	60m6				53		60m6											847	995					
250S/M	406	100	506				138	449	168	312	60m6*			18		11	60m6*				53		250	42	491	623	24	923	1071					
						349				274	65m6	140	125		58		60m6	140	125	18								1036	1188					
280S/M	457		557	600	468	368	142	510	190	359	65m6*						60m6*					11	280		578	748								
						419				299	75m6			20	67.5	12	65m6				58												6316-C3	
315S/M	508	129	628		497	406	152	558	216	376	65m6*			18	58	11	60m6*				53		315	52	613	812	28	1126	1274	2xM63x1.5			6314-C3	
						457				325	80m6	170	160	22	71	14	65m6				58							1156	1308				6319-C3	6316-C3
315B		182	630	698	595	630	162	830			75m6*	140	125	20	67.5	12	-							47.5	664	869		1432	-		M20	-	6316-C3	6314-C3
											100m6	210	200	28	90	16												1502			M24		6322-C3	6319-C3
355M/L	610	148	750	816	685	560	200	760	254	458	75m6*	140	125	20	67.5	12	60m6*	140	125	18	53	11	355	50	725	1040		1396	1561		M20		6316-C3	6314-C3
						630				388	100m6	210	200	28	90	16	80m6	170	160	22	71	14						1466	1661		M24	M20	6322-C3	6319-C3

Notes:
** Shaft dimensions for II pole motors, only for direct coupling.*
*** For frame 100L, 3kW, 4 poles, Premium Efficiency Line, the L dimension is 420mm and LC dimension is 475mm.*
- All dimensions are in millimeters.
- Larger and smaller flanges on request.
- The data for frame 355M/L shown above are for horizontal mounting applications under standard coupling loads. The customer must inform when application is vertical or under special coupling loads.
- The values shown are subject to change without prior notice. To obtain guaranteed values please contact our nearest sales office.

** This data apply to Cast Iron Frame – Improved Efficiency - EFF2, Premium Efficiency - EFF1 and Top Premium Efficiency – Exceeds EFF1.*

Inverter Duty Motors Cast Iron Frame

Mechanical Data

"FF" Flange

IEC FRAME	"FF" FLANGE									N° OF HOLES
	FLANGE	C	LA	M	N	P	T	S	α	
63	FF-115	40	9	115	95	140	3	10	45°	4
71	FF-130	45		130	110	160	3.5			
80	FF-165	50	10	165	130	200		12		
90S/L		56								
100L	FF-215	63	11	215	180	250	4	15		
112M		70								
132S/M	FF-265	89	12	265	230	300				
160M/L	FF-300	108	18	300	250	350	5	19		
180M/L		121								
200M/L	FF-350	133		350	300	400				
225S/M	FF-400	149		400	350	450			22°30'	8
250S/M	FF-500	168		500	450	550				
280S/M		190								
315S/M	FF-600	216	22	600	550	660	6	24		
315B										
355M/L	FF-740	254		740	680	800				

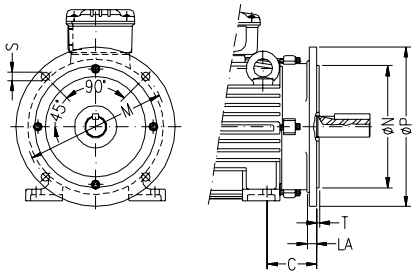

Standard Frame

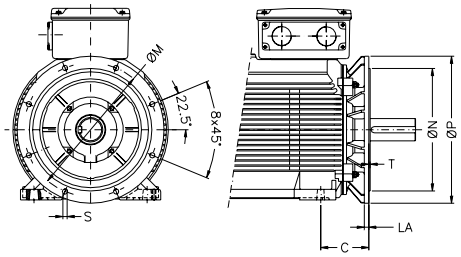

315B Frame

"C" Din Flange

IEC FRAME	"C" DIN FLANGE							N° OF HOLES
	FLANGE	C	M	N	P	S	T	
63	C-90	40	75	60	90	M5	2.5	4
71	C-105	45	85	70	105	M6		
80	C-120	50	100	80	120		3	
90S/L	C-140	56	115	95	140	M8		
100L	C-160	63	130	110	160		3.5	
112M		70						
132S/M	C-200	89	165	130	200	M10		

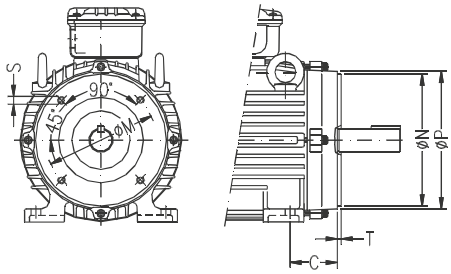

Standard Frame

Three Phase ODP Motors
Cast Iron Frames
Improved Efficiency EFF2

Standard Features:

- Three phase, multivoltage, IP55
- Output: 11 up to 370kW
- Frames: 160M up to 280L
- Voltage: 380-415 / 660V
- Class “F” insulation (ΔT=80K)
- Squirrel cage rotor (Aluminium die cast)
- Dip and baked impregnation up to frame 200
- Resin continuous flow impregnation (frames 225S/M up to 280S/M)
- Enclosure: ODP (Open Drip Proof) – IP23
- Mounting: B3L (standard)
- Ball bearings
- Thermistor (225S/M up to 280S/M)
- Color: RAL 5007

Typical Applications:

- Pumps
- Fans
- Kneader and mixer machines
- Cutting and sawing machines
- Pressing machines
- Industrial equipment
- Conveyor belts
- Blowers
- Compressors
- Cranes
- Packaging equipment
- Other severe duty applications

Options Available:

- Cable glands
- Class “H” insulation
- Second shaft end
- Thermistors, thermostats or PT100
- Roller bearings on drive endshields.

More options available, on request

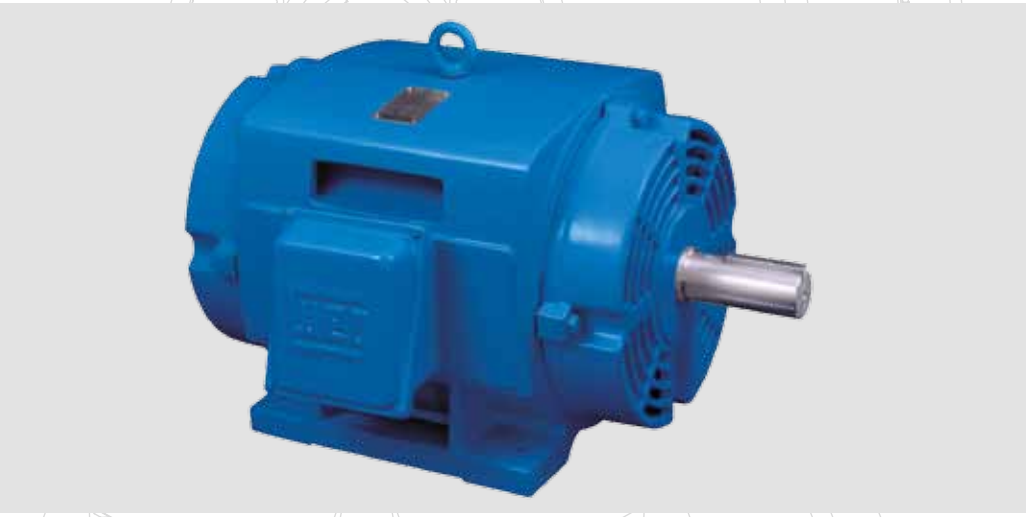

Bearings
WEG motors are fitted with the highest quality bearings selected from the best manufacturers in the world and designed to ensure long life of the motor even under heavy operating conditions. WEG also uses the Super-Premium Polyrex EM polyurea grease that is specially formulated for electric motor bearings. Its advanced thickener formulation provides low noise characteristics, improved bearing performance, protection and longer motor lifetime.

Internal Air Deflactor
Made of steel plate or cast iron and designed to direct air for improved heat dissipation.

Nameplate
Stainless steel nameplate ensuring a permanent record of all motor data.

Winding
The wire is enameled with class H and are impregnated with dip and baked process (frames 160 up to 200L) and continuous resin flow process (frames 225S/M up to 280S/M). Supplied with reinforced insulation system as standard.

Rotor
The advantages of aluminium rotors are lower inertia, higher starting torque and higher mechanical strength, from others. They are built with low magnetic losses steel laminations, which are thermo chemically treated to improve efficiency and minimize mechanical stress.

Shaft
WEG uses SAE/AISI 1040/45 steel as standard, which provides high mechanical resistance, preventing bending under load and minimizes fatigue which extends lifetime.

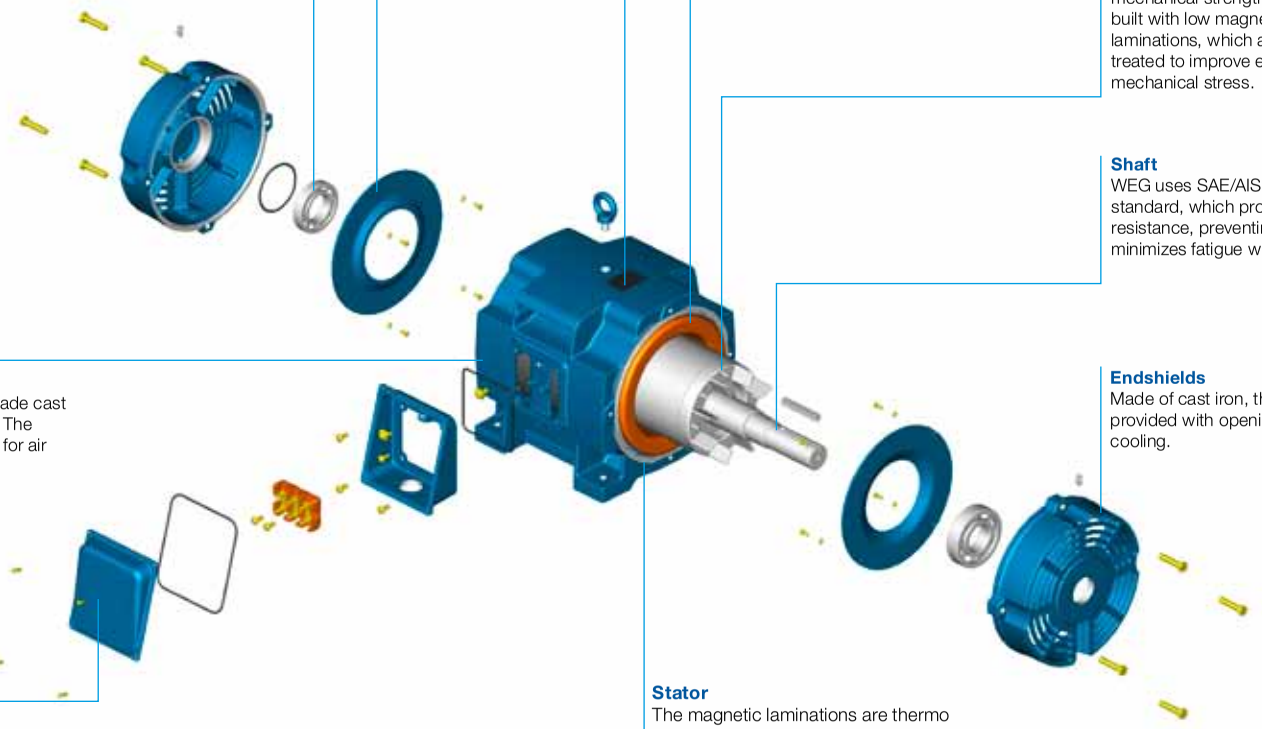

Frame
WEG motors are made of FC-200 high-grade cast iron (same density as flameproof motors). The frames are provided with lateral openings for air outflow.

Endshields
Made of cast iron, they are provided with openings for motor cooling.

Terminal Box
Made of cast iron with plenty of internal space, the terminal box can be rotated at 90° intervals, having one or two threaded holes to connect the power supply cables.

Stator
The magnetic laminations are thermo chemically treated to improve electric characteristics, thus reducing magnetic losses and operating temperature.

Three Phase ODP Motors Cast Iron Frames - Improved Efficiency EFF2

Output		IEC Frame	Full load torque C_n (Nm)	Locked rotor current I_l/I_n	Locked rotor torque T_l/T_n	Break-down torque T_b/T_n	Inertia J kgm²	Allowable locked rotor time Hot/Cold (s)	Weight (kg)	Sound dB (A)	Rated speed (rpm)	400 V						Full load current I_n (A)
												% of full load						
												Efficiency η			Power Factor (Cos φ)			
kW	HP											50	75	100	50	75	100	
II Pole - 3000 rpm																		
11	15	160M	35.96	6.5	1.7	2.6	0.03088	14/31	91.1	61	2930	86	88.4	88.4	0.7	0.8	0.85	21.1
15	20	160M	48.03	6.5	1.8	2.5	0.03824	8/18	99.3	61	2925	88	89	89.4	0.76	0.83	0.86	28.2
18.5	25	160L	59.93	7	2.1	2.8	0.04559	5/11	114.2	61	2930	88.5	90	90	0.75	0.83	0.86	34.5
22	30	160L	71.92	7	2	2.6	0.04559	6/13	114.2	66	2930	88.4	90.5	90.5	0.67	0.78	0.84	41.8
30	40	180M	95.73	6	1.8	2.5	0.07946	8/18	148.9	71	2935	90.2	91	91.4	0.71	0.8	0.85	55.7
37	50	180L	119.46	7	2	2.8	0.09932	6/13	171	73	2940	91	91.7	92	0.7	0.8	0.85	68.3
45	60	200M	142.62	5	2.1	2.4	0.16145	21/46	239.6	75	2955	91	92.5	92.5	0.75	0.83	0.86	81.6
55	75	200L	179.18	6	2	2.2	0.18388	12/26	249.2	76	2940	92	93	93	0.78	0.83	0.85	100
75	100	225S/M	237.3	6.5	1.9	2.7	0.3498	11/24	369.4	78	2960	92.8	93.6	93.6	0.82	0.87	0.89	129.95
90	125	250S/M	296.12	7.5	2	3.6	0.43052	8/18	413.9	79	2965	93.5	94.1	94.1	0.81	0.88	0.9	153
110	150	250S/M	355.34	8.2	2.2	3.2	0.50227	6/13	444.7	79	2965	93.5	94.4	94.4	0.83	0.89	0.91	185
132	175	280S/M	413.87	6.5	1.6	2.6	1.08256	15/33	626.8	81	2970	93.5	94.8	94.8	0.84	0.88	0.89	226
150	200	280S/M	472.99	8	2.2	2.8	1.27083	19/42	850	81	2970	93.5	95	95	0.82	0.88	0.9	253
160	220	280S/M	520.29	7.5	2	2.9	1.27083	15/33	671.6	81	2970	93.8	95	95	0.83	0.88	0.9	270
185	250	280S/M	592.24	7	1.8	2.5	1.27083	15/33	675.6	81	2965	94	94.4	94.4	0.84	0.88	0.9	314
200	270	280S/M	639.62	6.7	1.8	2.7	1.41204	15/33	717.1	81	2965	94	94.9	95.1	0.83	0.89	0.9	337
220	300	280S/M	710.69	6.5	1.7	2.5	1.41204	11/24	712.6	81	2965	94.2	94.8	94.7	0.85	0.89	0.9	373
250	340	280S/M	805.45	8	1.9	3	1.41204	11/24	710.7	81	2965	94.5	95	94.8	0.84	0.89	0.91	418
260	350	280S/M	829.14	7.8	1.8	2.8	1.41204	11/24	709	81	2965	94.5	95	94.8	0.84	0.89	0.91	435
280	380	280L	898.69	7.5	2.3	2.6	1.41204	23/51	860	81	2970	95.6	95.7	95.7	0.86	0.89	0.9	469
300	400	280L	945.99	7.9	2.5	2.7	1.83566	18/40	940	81	2970	95.7	95.8	95.7	0.87	0.89	0.9	503
315	430	280L	1018.65	8	2.4	2.6	1.97686	19/42	970	81	2965	95.7	95.8	95.8	0.86	0.89	0.9	527
330	450	280L	1066.03	7.7	2.4	2.6	1.97686	19/42	970	81	2965	95.7	95.8	95.8	0.86	0.89	0.9	552
355	482	280L	1139.92	8.5	2.7	2.9	2.11806	14/31	1030	81	2970	95.9	95.9	95.9	0.85	0.89	0.9	594
370	500	280L	1182.49	8.5	2.5	2.9	2.25927	16/35	1070	81	2970	95.9	96	96	0.85	0.89	0.9	618
HIGH-OUTPUT DESIGN																		
280	380	280S/M	901.72	6.6	1.5	2.6	1.41204	13/29	850	81	2960	94.8	95.3	95.2	0.87	0.9	0.91	467
IV Pole - 1500 rpm																		
11	15	160M	72.16	6	2.2	2.4	0.06524	7/15	99.5	53	1460	87	88	88.4	0.59	0.73	0.8	22.5
15	20	160L	96.55	5.5	2.3	2.3	0.08782	11/24	116.7	56	1455	88	89.4	89.4	0.63	0.74	0.81	29.9
18.5	25	160L	120.27	6	2.3	2.6	0.1104	11/24	129.1	62	1460	89.5	90	90	0.61	0.73	0.8	37.1
22	30	180M	143.35	6.5	2.4	2.5	0.14351	10/22	154.3	65	1470	88.5	90.5	90.5	0.65	0.75	0.82	42.8
30	40	180L	191.13	6.5	2.4	2.4	0.17939	9/20	177.6	66	1470	90.5	91.4	91.4	0.68	0.78	0.83	57.1
37	50	200M	238.91	6.5	2.2	2.3	0.25511	11/24	241.8	66	1470	90.5	91.5	92	0.6	0.73	0.79	73.5
45	60	200L	285.72	6.5	2.1	2.8	0.29648	11/24	249.7	66	1475	91	92.3	92.5	0.64	0.75	0.8	87.8
55	75	225S/M	355.94	7	2.2	2.7	0.68237	11/24	348	66	1480	91.8	92.8	93	0.72	0.82	0.86	99.3
75	100	250S/M	474.59	7	2.4	2.9	0.82234	8/18	447.2	66	1480	92.5	93.6	93.6	0.71	0.81	0.85	136
90	125	250S/M	595.25	6.5	2	2.7	0.96232	7/15	442.2	66	1475	93	93.9	93.9	0.76	0.83	0.86	161
110	150	280S/M	709.49	7.4	2.2	2.7	1.68621	12/26	599.8	71	1485	93.8	94.4	94.4	0.75	0.85	0.87	193
132	175	280S/M	830.54	7.5	2.2	2.6	2.08769	12/26	671.3	72	1480	94	94.7	94.7	0.79	0.85	0.88	229
150	200	280S/M	949.18	7.4	2	2.2	2.40888	9/20	952	72	1480	94.2	94.8	95	0.79	0.86	0.88	259
160	220	280S/M	1044.1	7	1.9	2.1	2.40888	8/18	612.7	72	1480	94	94.8	95	0.8	0.87	0.89	273
185	250	280L	1186.48	7	2.3	2.5	2.40888	10/22	952	72	1480	95.3	95.5	95.3	0.78	0.84	0.87	322
200	270	280L	1281.4	7.5	2.4	2.7	2.40888	8/18	952	72	1480	95.4	95.5	95.4	0.74	0.82	0.86	352
220	300	280L	1423.78	7.8	2.5	2.7	2.40888	8/18	952	72	1480	95.4	95.6	95.4	0.77	0.84	0.87	383
250	340	280L	1608.18	8.1	2.6	2.8	2.40888	8/18	952	72	1485	95.6	95.7	95.6	0.77	0.84	0.87	434
260	350	280L	1655.48	8	2.5	2.7	2.40888	8/18	952	72	1485	95.6	95.7	95.6	0.77	0.84	0.87	451

Notes:
**Class "F" insulation with ΔT105K*
Standard voltage, connection and frequency: 220-240V Δ 50Hz 380-415V Δ 50Hz
380-415V Y 50Hz 660-690V Y 50Hz
The values shown are subject to change without prior notice. To obtain guaranteed values please access our website.

Three Phase ODP Motors Cast Iron Frames - Improved Efficiency EFF2

Output		380 V								415 V							
		Rated speed (rpm)	% of full load						Full load current I_n (A)	Rated speed (rpm)	% of full load						Full load current I_n (A)
			Efficiency η			Power Factor (Cos φ)					Efficiency η			Power Factor (Cos φ)			
kW	HP		50	75	100	50	75	100			50	75	100	50	75	100	
II Pole - 3000 rpm																	
11	15	2920	87	88	88	0.76	0.84	0.88	21.6	2940	85.5	88.4	88.4	0.66	0.77	0.83	20.9
15	20	2920	87	88.5	89	0.81	0.86	0.88	29.1	2935	87.4	89	89.4	0.7	0.8	0.85	27.5
18.5	25	2925	87	88	89	0.82	0.87	0.89	35.5	2935	88	90	90	0.7	0.78	0.83	34.5
22	30	2925	89	90	90.3	0.76	0.85	0.86	43	2940	89	90	90.5	0.62	0.76	0.82	41.2
30	40	2925	90.2	91	91	0.77	0.85	0.88	56.9	2940	89.5	91	91.4	0.65	0.76	0.82	55.7
37	50	2930	90.2	91.7	91	0.75	0.83	0.87	71	2945	90.5	91	92	0.67	0.77	0.83	67.4
45	60	2950	91	92	92	0.81	0.86	0.87	85.4	2960	91.5	92.5	92.5	0.72	0.8	0.83	81.5
55	75	2930	91.7	92.4	92.4	0.83	0.87	0.88	103	2950	92	93	93	0.73	0.81	0.83	99.1
75	100	2955	92	92.8	92.8	0.85	0.89	0.9	136.435	2965	92.8	93.6	93.6	0.8	0.86	0.88	126.676
90	125	2960	92.5	93.5	93.5	0.84	0.89	0.91	161	2965	93.5	94.1	94.1	0.79	0.87	0.9	148
110	150	2960	93	93.7	93.7	0.85	0.9	0.92	194	2965	93.3	94.4	94.4	0.81	0.87	0.9	180
132	175	2965	93.2	94	94.5	0.87	0.89	0.9	236	2975	93.5	94.8	94.8	0.82	0.87	0.88	220
150	200	2970	93.8	95	94.8	0.85	0.89	0.91	264	2975	93.2	94.8	95	0.79	0.87	0.89	247
160	220	2965	94	95	94.7	0.86	0.89	0.91	282	2975	93.6	95	95	0.81	0.87	0.89	263
185	250	2965	94.1	94.3	94.1	0.86	0.89	0.9	332	2970	93.8	94.4	94.4	0.82	0.87	0.89	306
200	270	2960	94.3	94.9	94.9	0.86	0.9	0.91	352	2970	93.7	94.9	95.2	0.81	0.88	0.89	328
220	300	2960	94.4	94.7	94.4	0.87	0.9	0.91	389	2965	94	94.7	94.8	0.83	0.88	0.89	363
250	340	2960	94.8	95.1	94.8	0.87	0.91	0.92	436	2970	94	94.7	94.7	0.8	0.87	0.89	413
260	350	2960	94.8	95.1	94.8	0.87	0.91	0.92	453	2970	94	94.7	94.7	0.8	0.87	0.89	429
280	380	2965	95.6	95.6	95.4	0.88	0.9	0.91	490	2970	95.4	95.6	95.7	0.84	0.88	0.89	457
300	400	2965	95.5	95.7	95.5	0.89	0.9	0.91	524	2970	95.6	95.8	95.8	0.85	0.89	0.9	484
315	430	2965	95.8	95.8	95.6	0.88	0.9	0.91	550	2970	95.8	95.9	95.9	0.85	0.88	0.9	508
330	450	2965	95.8	95.8	95.6	0.88	0.9	0.91	576	2970	95.8	95.9	95.9	0.85	0.88	0.9	532
355	482	2965	95.9	95.8	95.7	0.88	0.9	0.91	619	2970	95.6	95.9	95.9	0.83	0.88	0.9	572
370	500	2970	96	96	95.9	0.87	0.9	0.91	644	2970	95.7	95.9	96	0.83	0.87	0.89	602
HIGH-OUTPUT DESIGN																	
280	380	2960	95	95.4	95.2	0.89	0.91	0.92	486	2965	94.4	95.1	95.1	0.84	0.89	0.9	455
IV Pole - 1500 rpm																	
11	15	1455	87.5	88	88	0.66	0.77	0.83	22.9	1465	85.5	88	88.4	0.54	0.68	0.75	23.1
15	20	1450	88	89	89	0.69	0.79	0.82	31.2	1460	87.5	89.4	89.4	0.57	0.69	0.77	30.3
18.5	25	1455	89	89.5	89.5	0.66	0.77	0.82	38.3	1465	88.5	89.5	90	0.56	0.7	0.77	37.1
22	30	1465	89	90.5	90.5	0.7	0.8	0.84	44	1475	88	90.5	90.5	0.56	0.7	0.8	42.3
30	40	1465	90.2	91	90.5	0.74	0.82	0.85	59.3	1475	89.5	91.4	91.4	0.63	0.75	0.8	57.1
37	50	1465	90	91	91.5	0.68	0.79	0.83	74	1475	89.5	91	92	0.55	0.68	0.75	74.6
45	60	1470	91	91.8	92	0.71	0.81	0.83	89.5	1480	90	92	92.5	0.58	0.7	0.76	89.1
55	75	1475	91	92	92.5	0.78	0.85	0.88	103	1480	91.5	92.5	93	0.7	0.8	0.84	97.9
75	100	1475	92	92.8	92.8	0.77	0.85	0.88	140	1480	92	93	93.6	0.66	0.77	0.83	134
90	125	1470	92	93	92.5	0.8	0.85	0.87	170	1480	93	93.9	93.9	0.72	0.82	0.85	157
110	150	1480	93	94	94	0.8	0.86	0.88	202	1485	93.5	94	94.4	0.73	0.82	0.86	189
132	175	1480	93.5	94.5	94.3	0.82	0.86	0.89	239	1485	94	94.7	94.7	0.76	0.84	0.87	223
150	200	1475	93.5	94.1	93.9	0.82	0.87	0.89	273	1480	94	94.5	95	0.75	0.83	0.87	252
160	220	1475	93.6	94.1	93.9	0.81	0.88	0.89	291	1480	94	94.5	95	0.76	0.84	0.88	266
185	250	1480	95.3	95.3	95	0.81	0.86	0.88	336	1480	95.2	95.5	95.4	0.76	0.83	0.86	314
200	270	1480	95.5	95.5	95.3	0.77	0.84	0.87	366	1480	95.2	95.5	95.5	0.72	0.81	0.85	343
220	300	1480	95.5	95.5	95.2	0.8	0.86	0.88	399	1480	95.2	95.6	95.5	0.75	0.83	0.86	373
250	340	1480	95.7	95.7	95.4	0.8	0.86	0.88	452	1485	95.3	95.6	95.6	0.75	0.83	0.86	423
260	350	1480	95.7	95.7	95.4	0.8	0.86	0.88	471	1485	95.3	95.6	95.6	0.75	0.83	0.86	440

Three Phase ODP Motors

Mechanical Data

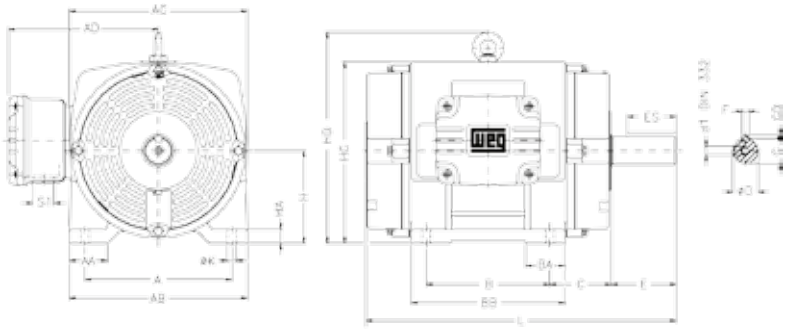

IEC FRAME	A	AA	AB	AC	AD	B	BA	BB	C	SHAFT DIMENSIONS						H	HA	HC	HD	K	L	S1	d1	BEARINGS	
										D	E	ES	F	G	GD									D.E.	N.D.E.
160M	254	64	308	300	256	210	65	254	108	48k6	110	80	14	42.5	9	160	22	310	365	14.5	533	2xM40x1.5	DM16	6311-Z-C3	6209-Z-C3
160L						254		298													577				
180M	279	80	350	350	276	241	75	294	121	55m6			16	49	10	180	30	354	409		586		M20	6312-Z-C3	6211-Z-C3
180L						279		332													624				
200M	318	82	385	384	295	267	85	133		60m6				53		200		392	457	18.5	671	2xM50x1.5		6314-Z-C3	6212-Z-C3
200L						305		370													709				
225S/M	356	80	436	454	370	286	105	391	149	60m6*	140	125	18		11	225	34	464	535		747			6324-C3	6314-C3
						311				65m6				58											
250S/M	406	100	506				138	449	168	65m6*						250	46	489	560	24	823	2xM63x1.5			
						349				75m6			20	67.5	12									6316-C3	
280S/M	457		557	562	470	368	142	510	190	65m6*	170	160	18	58	11	280		570	660		935			6314-C3	
						419				80m6			22	71	14						965			6319-C3	6316-C3

IEC FRAME	"FF" Flange Dimensions									N°OF HOLES
	FLANGE	C	LA	M	N	P	T	S	a	
160M/L	FF-350	108	10	350	300	400	5	19	45°	4
180M/L		121								
200M/L	FF-400	133		400	350	450			22°30'	8
225S/M	FF-500	149		500	450	550				
250S/M	FF-600	168	22	600	550	660	6	24		
280S/M		190								

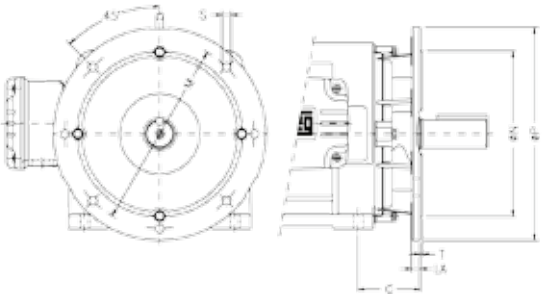

- All dimensions are given in millimeters.
- The data for frame 355M/L shown above are for horizontal mounting applications under standard coupling loads. The customer must indicate when application is vertical or under special coupling loads.
- The values shown are subject to change without prior notice. To obtain guaranteed values please contact our nearest sales office.
** Shaft dimensions for II pole motors, only for direct coupling.*

Three Phase ODP Motors

Mechanical Data

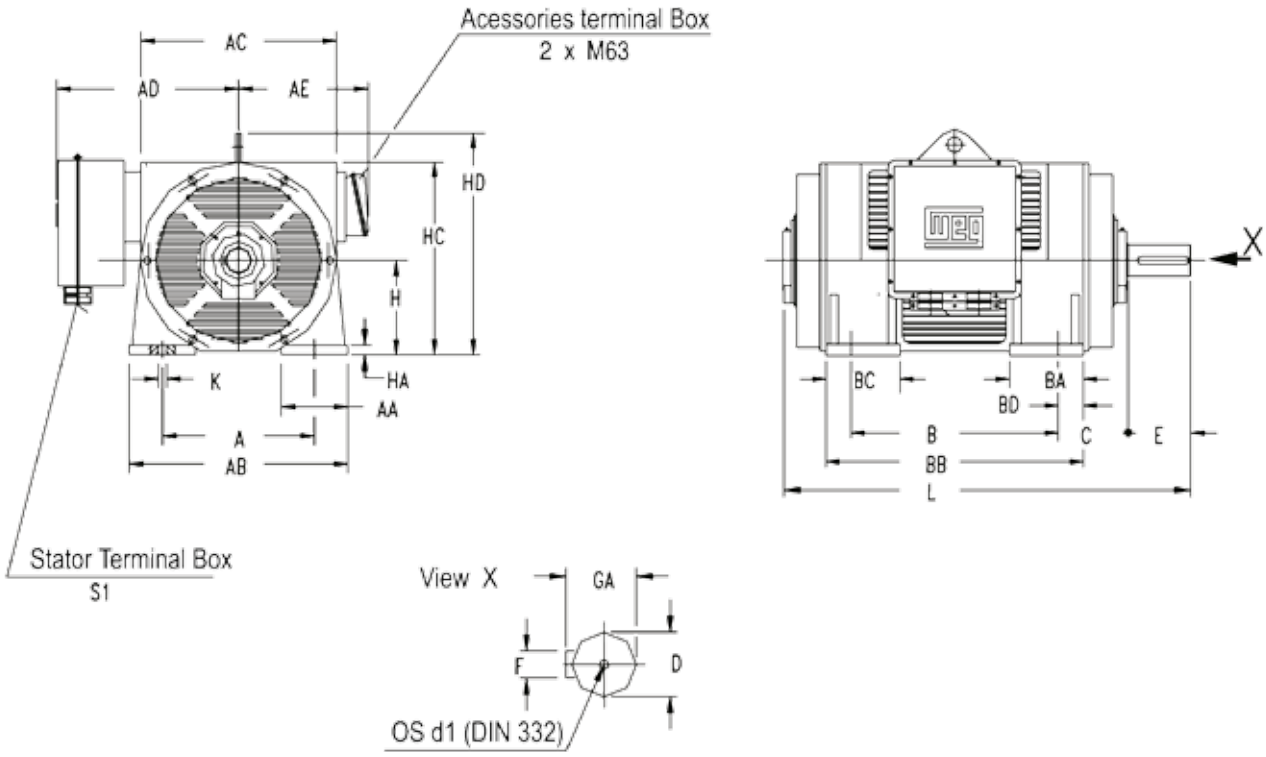

IEC FRAME	IEC / DIN	A / b	AA / n	AB / f	AC / g1	AD / g2	AE [6]	B / a	BA / m	BC	BB / e	BD	C / w1	H / h	HA / c	HC / h1	HD / p	K / s	S1 / V	SHAFT EXTENSION IV OR MORE POLE d1 / d3	D / d	GA / t	F / u	E / l	L / k	SHAFT EXTENSION II POLE d1 / d3	D / d	GA / t	F / u	E / l	L / k
280	L	457	150	657	710	530	490	457	200	230	686	63	190	280	42	575	700	24	2 x M50	M20	80	85	22	170	1101	M20	65	69	18	140	1063
	A							508																							
	B							560																							
	C							630		300	930														1345						1307
	D							710																							
	E							800																							
315	L	508	160	708	770	565	520	508	200	292	794	82	216	315	45	640	760	28	2 x M63	M24	90	95	25	170	1222	M20	65	69	18	140	1184
	A							560																							
	B							630																							
	C							710																							
	D							800		360	1064														1492						1454
	E							900																							
355	L	610	200	810	763	715	580	630	250	250	856	113	254	355	28	730	840	28	2 x M80	M24	100	106	28	210	1337	M20	65	69	18	140	1272
	A							710			936														1417						1352
	B							800			1026														1507						1442
	C							900			1126														1607						1542
	D							1000			1226														1707						1642
	E							1120			1346														1827						1762

1 - Optional second shaft end
2 - Dimensions subject to changes without prior notice
3 - Frame 280 and 315 cast iron - Frame 355 steel
4 - Bearings designed for direct coupling
5 - Dimensions AE for motors with auxiliary terminal box
6 - Mechanical dimensions are given in milimeters

Single Phase Cast Iron Frame Motors Improved Efficiency EFF2

Standard Features:

- Single-phase, IP55
- Output: 0.25 up to 7.5kW
- Frames: 71 up to 132M
- Voltage: 220 / 440V
- Class “F” insulation (ΔT=80K)
- Squirrel cage rotor / Aluminium die cast
- Continuous duty: S1
- Design N
- V’Ring on both endshields
- Stainless steel nameplate AISI 316
- Run and start capacitor
- ZZ ball bearings
- 1045 carbon steel shaft
- Color: RAL 5007

Options Available:

- Class “H” Insulation
- Special Voltages
- Specially designed shaft
- Second shaft end
- Drip cover (canopy) for shaft down application
- Thermistors and Thermostats
- Stainless steel shaft
- Flange mounting

Typical Applications:

- Pumps
- Fans
- Compressors
- Pulleys
- Cranes
- Conveyor belts
- Silo unloaders
- Grinders
- Other general application machines

Thermal Protection
Motor is equipped with manual thermal protection against overloads, on request

Fan Cover
Made of steel plate for frames 71 up to 132M frames. It provides higher mechanical strength, corrosion resistance and extended lifetime.

Centrifugal Switch
The centrifugal switch has special helicoidal steel springs, controlled by calibrated counter-weights, assembled on a rigid base. Its fast action helps to increase contacts life avoiding sparks and erosion

Terminal Box
Made of cast iron with plenty of internal space, the teminal box can be rotated at 90° intervals, having one or two threaded holes to connect power supply cables.
* Available as top or side mounted.

Winding
The wire is enameled with class H Varnish and are impregnated with dipping and baking process (frames 71 up to 200L).
Supplied with patented WISE (WEG Insulation System Evolution), which allows three times longer motor lifetime designed to operate in environments with excess of moisture and suitable for VFD application. The winding is designed to obtain the minimal Joule losses and temperature rise.

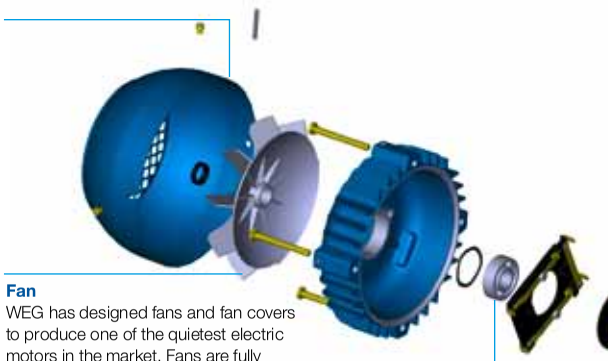

Fan
WEG has designed fans and fan covers to produce one of the quietest electric motors in the market. Fans are fully interchangeable and efficient cooling ensures low motor temperature rise, this minimizes winding losses, thus increasing motor efficiency.

Rotor
High-pressure die casting aluminium rotor dynamically balanced reducing vibration. Advantages of aluminum rotors include lower inertia, higher starting torque and higher mechanical stiffness, among others. The steel laminations are thermally and chemically treated to improve efficiency and minimize mechanical stress.

Shaft
WEG uses SAE/AISI 1040/45 carbon steel as standard, which provides high mechanical strength, avoiding bending under load and minimizes fatigue which extends lifetime performance. Specially designed to withstand torques caused during motor acceleration and deceleration (brake). Upon special design motor can have a second shaft end.

Endshields
Made of cast iron, they are provided with external fins for better heat dissipation, thus increasing bearing life time.

Bearings
WEG motors are fitted with the highest quality bearings selected among the best manufacturers in the world and designed to ensure long life to the motor even under heavy operating conditions. WEG also uses the Super-premium Polyrex EM polyurea grease that is specially formulated for electric motor bearings. Its advanced thickener formulation and proprietary manufacturing techniques provide low noise characteristics, improved bearing performance and protection.

Stator
The stator is built with highest quality of steel lamination and it is thermally and chemically treated to reduce electrical losses and operating temperature. Guarantees high efficiency and extended motor lifetime.

Seals
WEG motors are fitted with either V-ring seals, Oil seals or Lip seals and may also be fitted with Labyrinth Taconite seals or W3Seal to ensure the best possible protection under dusty and high moisture environments.

Frame
WEG motors are made of FC-200 high-grade cast iron (same density as flameproof motors). The frames are provided with fins aimed at improving the heat dissipation and adequately spaced to minimize air blockage due to accumulation of dirt. The motors can be mounted in horizontal or vertical positions.

Nameplate
Stainless steel nameplate ensuring a permanent record of all motor data.

Single Phase Cast Iron Frame Motors

Output		IEC Frame	Full load torque C_n (Nm)	Locked rotor current I_l/I_n	Locked rotor torque T_l/T_n	Break-down torque T_b/T_n	Inertia J kgm²	Allowable locked rotor time Hot/Cold (s)	Weight (kg)	Sound dB (A)	Rated speed (rpm)	400 V						Full load current I_n (A)
												% of full load						
												Efficiency η			Power Factor (Cos φ)			
kW	HP											50	75	100	50	75	100	
II Pole - 3000 rpm																		
0.37	0.5	71	2910	3.00	6.5	1.20	3.0	2.9	52.0	62.0	68.0	0.66	0.76	0.82	1.00	0.00050	6	11.0
0.55	0.75	71	2890	4.00	5.2	1.82	2.2	2.3	56.0	63.5	69.6	0.77	0.84	0.90	1.00	0.00060	6	11.5
0.75	1.0	80	2930	5.00	7.0	2.39	3.0	3.0	70.0	73.0	76.0	0.66	0.76	0.88	1.00	0.00100	6	15.0
1.1	1.5	80	2860	7.50	6.0	3.68	2.7	2.6	70.0	75.0	76.0	0.74	0.82	0.88	1.00	0.00100	6	15.0
1.5	2.0	90S	2910	9.80	7.5	4.83	1.7	2.0	78.6	81.5	81.7	0.65	0.78	0.85	1.00	0.00230	6	21.0
2.2	3.0	90L	2890	13.9	6.8	7.29	2.0	2.1	73.5	77.0	78.0	0.82	0.89	0.92	1.00	0.00300	6	30.0
3.0	4.0	100L	2870	19.6	6.5	9.78	2.5	2.3	72.0	76.5	78.0	0.78	0.85	0.90	1.00	0.00730	6	35.0
3.7	5.0	112M	2910	22.0	6.4	12.0	2.6	2.4	79.0	82.0	84.0	0.82	0.89	0.90	1.00	0.00920	6	51.0
5.5	7.5	132M	2910	33.0	6.3	18.1	2.3	2.5	83.0	84.0	84.5	0.83	0.87	0.90	1.00	0.02430	6	70.0
7.5	10	132M	2930	42.0	6.7	23.9	2.0	2.5	83.2	84.5	85.6	0.89	0.92	0.93	1.00	0.03180	6	80.0
IV Pole - 1500 rpm																		
0.25	0.33	71	1440	2.20	6.2	1.60	3.6	2.4	44.7	54.0	64.5	0.66	0.74	0.80	1.00	0.00080	6	11.5
0.37	0.5	71	1440	3.00	6.0	2.43	3.3	2.3	49.0	59.0	65.6	0.70	0.79	0.85	1.00	0.00090	6	12.0
0.55	0.75	80	1450	4.40	5.5	3.63	2.3	2.4	55.0	63.8	69.5	0.62	0.74	0.82	1.00	0.00320	6	16.0
0.75	1.0	80	1450	5.50	5.5	4.84	2.3	2.3	61.0	71.5	74.1	0.60	0.72	0.82	1.00	0.00320	6	16.5
1.1	1.5	90S	1430	7.60	7.0	7.37	1.8	1.7	68.5	74.0	74.5	0.70	0.80	0.88	1.00	0.00560	6	22.5
1.5	2.0	90L	1440	10.9	6.0	9.75	1.9	1.8	65.0	72.5	75.3	0.60	0.75	0.83	1.00	0.00670	6	29.0
2.2	3.0	100L	1450	14.8	6.0	14.5	2.3	2.3	71.2	76.5	78.0	0.70	0.80	0.87	1.00	0.01000	6	34.0
3.0	4.0	112M	1440	19.0	6.2	19.5	2.3	2.3	71.8	77.2	78.2	0.78	0.86	0.90	1.00	0.01740	6	52.0
3.7	5.0	112M	1430	22.0	5.5	24.5	2.3	2.3	72.0	78.0	78.6	0.90	0.93	0.95	1.00	0.01870	6	55.0
5.5	7.5	132M	1440	32.0	6.5	36.5	2.6	2.3	81.0	83.0	83.4	0.84	0.90	0.94	1.00	0.04400	6	70.0
7.5	10	132M	1440	42.0	6.6	48.7	2.4	2.4	80.0	82.2	83.8	0.87	0.92	0.95	1.00	0.05590	6	84.0

Mechanical Data

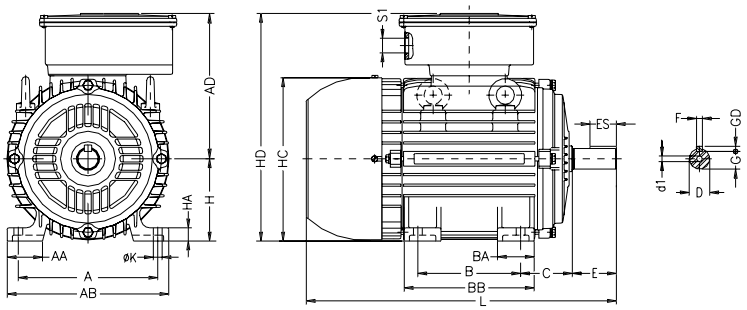

IEC FRAME	A	AA	AB	AC	AD	B	BA	BB	C	SHAFT DIMENSIONS						H	HA	HC	HD'	K	L	S1	D1	BEARINGS	
										D	E	ES	F	G	GD									D.E.	N.D.E.
63	100	21	116	125	118	80	22	95	40	11j6	23	14	4	8.5	4	63	8	124	181	7	262	M20x1.5	EM4	6201-ZZ	
71	112	30	132	141	126	90	38	113.5	45	14j6	30	18	5	11	5	71	12	139	197		295		DM5	6203 ZZ	6202 ZZ
80	125	35	149	159	135	100	40	125.5	50	19j6	40	28	6	15.5	6	80	13	157	215	10	325		DM6	6204 ZZ	6203 ZZ
90S	140	38	164	179	177		42	131	56	24j6	50	36	8	20	7	90	15	177	267		335	M25x1.5	DM8	6205 ZZ	
90L						125		156													360				
100L	160	49	188	199	187	140	50	173	63	28j6	60	45		24		100	16	198	287	12	420	M32x1.5	DM10	6206 ZZ	6206 ZZ
W112M	190	48	220	200			62	177	70							112		224	299		428			6307 ZZ	
112M				222	199		50										18.5	235	280		423				
W112M	216	51	248	270		178	85	225	89	38k6	80	63	10	33	8	132	21	255	331		500		DM12	6308 ZZ	
132M					227		55										20	274	337		490				

- Guaranteed data, whitin the permissible tolerances as per IEC 34-2.
- To obtain current at 440V, multiply by 0,5.
- The values shown are subject to change without prior notice. To obtain guaranteed values, please contact our nearest sales office.

Single Phase Cast Iron Frame Motors

Mechanical Data

"FF" Flange

IEC FRAME	"FF" FLANGE DIMENSIONS								Nº OF HOLES
	FLANGE	C	LA	M	N	P	T	S	
63	FF-115	40	9	115	95	140	3	10	4
71	FF-130	45		130	110	160	3.5		
80	FF-165	50	10	165	130	200		12	
90S/L		56							
100L	FF-215	63	11	215	180	250	4	15	
W112M	FF-215	70							
112M									
W112M	FF-265	89	12	265	230	300			
132M									

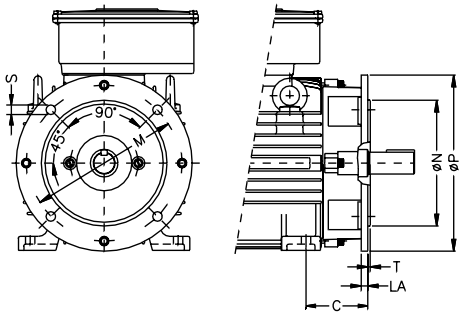

"C" and "C" DIN Flange

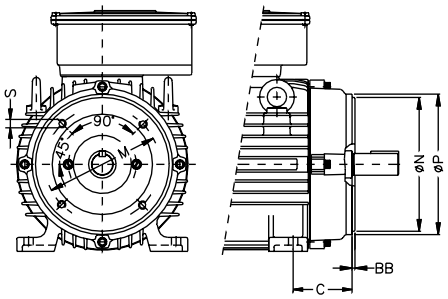

IEC FRAME	C FLANGE DIMENSIONS							Nº OF HOLES
	FLANGE	C	M	N	P	T	S	
63		40	95.2	76.2	143	4	UNC 1/4"x20	4
71	FC-95	45						
80	FC-95	50						
90S/L	FC-149	56	149.2	114.3	165		UNC 3/8"x16	
100L	FC-149	63						
W112M		70	184.2	215.9	225	6.3	UNC 1/2"x13	
112M	FC-184							
W132S/M		89						
132M	FC-184							

FRAME	C "DIN" FLANGE DIMENSIONS							Nº OF HOLES
	FLANGE	C	M	N	P	T	S	
63	C-90	40	75	60	90	2.5	M5	4
71	C-105	45	85	70	105		M6	
80	C-120	50	100	80	120	3		
90S/L	C-140	56	115	95	140		M8	
100L	C-160	63	130	110	160	3.5		
W112M		70						
112M								
W132S/M	C-200	89	165	130	200		M10	
132M								

Single Phase Multi-Mounting Motors Aluminium Frame Improved Efficiency EFF2

Standard Features:

- Single-phase, IP55
- Output: 0.25 up to 7.5kW
- Frames: 71 up to 132S
- Class “F” insulation (ΔT=80K)
- Continuous duty: S1
- Run and start capacitor
- ZZ ball bearings
- 1045 carbon steel shaft
- Plastic T-box
- Lip seal
- Color: RAL 5007

Options Available:

- Cable glands
- Specially designed shaft
- Second shaft end
- Stainless steel shaft
- Flange mounting
- Other mounting configurations and other cables entry positions

Typical Applications:

- Pumps
- Fans
- Compressors
- Pulleys
- Cranes
- Continuous conveyors
- Grinders
- Other general application machines

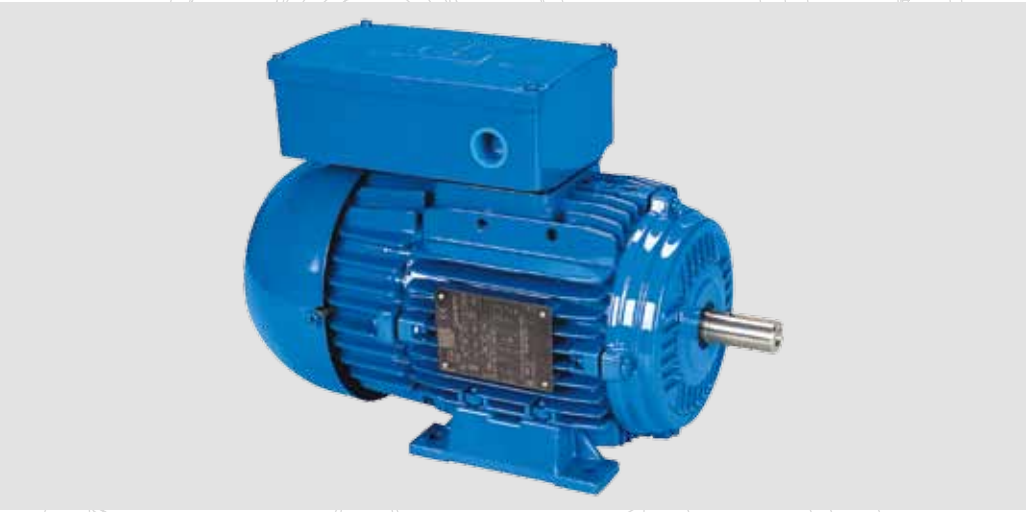

Terminal Box
Top mounted. Box and cover are mold injected in poliamide (nylon) in order to lower weight without losing mechanical and impact strength.

Bearings
WEG motors are fitted with the highest quality bearings selected from the best manufacturers in the world and designed to ensure long life of the motor even under heavy operating conditions.WEG also uses the Super-Premium Polyrex EM polyurea grease that is specially formulated for electric motor bearings. Its advanced thickener formulation provides low noise characteristics, improved bearing performance, protection and longer motor lifetime.

Winding
The copper wire is class “H” enameled as standard and the windings are impregnated with solvent free polyester resin in a dip and baked process. All these features provide high dielectric and mechanical strength and longer life to the windings.

Endshields
Made of cast iron, provided with external fins for better heat dissipation, thus increasing bearing life time.

Fan Cover
Made of steel plate for frames 71 up to 132M. It offers a superior mechanical strength, corrosion-resistance and extended lifetime.

Rotor
High pressure die cast rotor dynamically balanced, thus reducing vibrations.

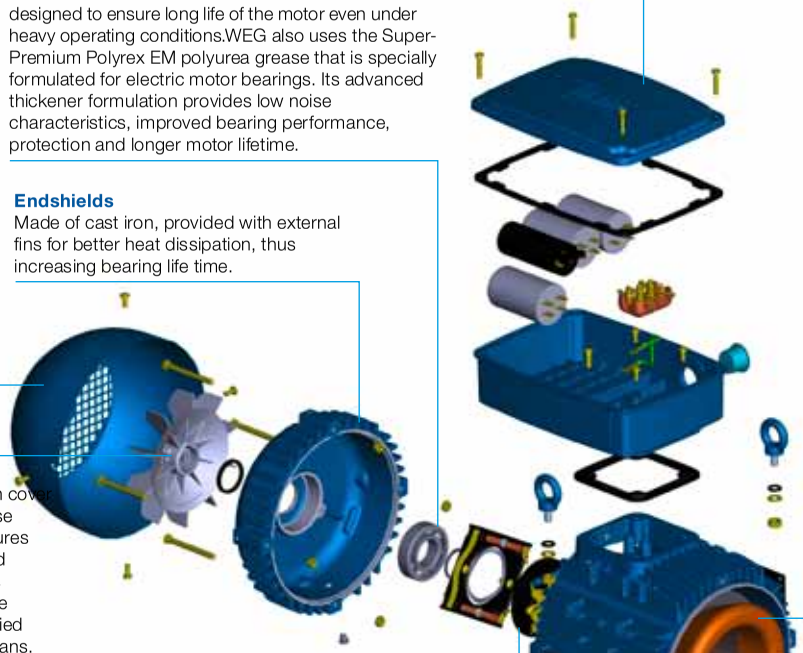

Shaft
WEG uses SAE/AISI 1045 carbon steel as standard providing high mechanical strength, minimizing bending under load and fatigue. Stainless steel can be supplied as optional.

Fan
WEG has designed fan and fan cover bearing in mind the lowest noise level. The efficient cooling ensures low motor temperature rise and minimizes winding losses, thus increasing motor efficiency. The Single Phase Motors are supplied with anti-static polypropylene fans.

Endshields
Made of cast iron, they are provided with external fins for better heat dissipation, thus increasing bearing life.

Centrifugal Switch
The centrifugal switch has special helicoidal steel springs, controlled by calibrated counter-weights, assembled on a rigid base. Its fast operation helps to increase contacts life avoiding sparks and erosion.

Seals
WEG motors are fitted with either V-ring seals, Oil seals or Lip seals and may also be fitted with Labyrinth Taconite seals or W3Seal to ensure the best possible protection under dusty and high moisture environments.

Frame
Made of aluminium with external fins for maximum cooling effect and low weight.

Stator
Built with low magnetic loss steel laminations, which are thermo chemically treated to improve efficiency and minimize mechanical stress.

Feet
Removable feet on aluminium frames allow mounting configuration in all positions.

Nameplate
Stainless steel nameplate ensuring a permanent record of all motor data.

Drain Hole
Provided with automatic plastic drain plug allowing drainage of condensed water.

Single Phase Multi-Mounting Motors Aluminium Frame
Improved Efficiency EFF2

Output		IEC Frame	Rated Speed rpm	Full load Current In (A)		Locked Rotor Current Ip/In	Cn (Nm)	Locked Rotor Current Tl/Tn	Brake-down-Torque-Tl/Tn	% of full load						Moment of Inertia	Allowable Locked Rotor Time Hot (s)	Approx Weight Kg
										Efficiency η			Power Factor (Cos φ)					
kW	HP			At 220V	At 440V					50	75	100	50	75	100			
II Pole - 3000 rpm																		
0.37	0.5	71	2910	3.5	1.75	7.5	0.12	3.5	3	52.5	62	66	0.6	0.68	0.78	0.005	6	10.6
0.55	0.75	71	2880	4.2	2.1	6.2	0.19	2.2	2.3	57.5	66	70	0.7	0.81	0.86	0.005	6	10.6
0.75	1	80	2900	5.6	2.8	6.5	0.25	2.3	2.7	66	72	74	0.7	0.77	0.82	0.001	6	15
1.1	1.5	80	2850	7.8	3.9	6	0.38	2.5	2.2	75.5	77	77	0.68	0.78	0.84	0.001	6	15.4
1.5	2	90S	2900	10.6	5.3	6	0.49	2	2.1	70	75.5	77	0.69	0.8	0.85	0.0022	6	17.7
2.2	3	90L	2890	14.3	7.15	6	0.74	2	2.1	75.5	78.5	78.5	0.74	0.85	0.91	0.0028	6	20.2
3	4	100L	2880	19	9.5	6.2	0.99	2.2	2.3	72	77	80	0.77	0.85	0.9	0.007	6	30.8
3.7	5	112M	2900	22	11	6.4	1.23	2.6	2.4	78	81.5	82.5	0.77	0.85	0.9	0.0092	6	44.5
5.5	7.5	132M	2910	33	16.5	6.3	1.85	2.3	2.5	83	84	84.5	0.83	0.87	0.9	0.0243	6	56.7
7.5	10	132M	2930	42	21	7	2.44	1.8	2.5	83	84	85	0.84	0.9	0.93	0.0318	6	77.8
IV Pole - 1500 rpm																		
0.25	0.33	71	1440	2.3	1.15	7.5	0.16	5.8	4.6	50.5	57.5	64	0.63	0.7	0.78	0.008	6	10.2
0.37	0.5	71	1440	3	1.5	6	0.25	6.1	4.8	52.5	62	66	0.65	0.75	0.8	0.009	6	11.1
0.55	0.75	80	1450	4.6	2.3	6	0.37	2.7	2.5	55	64	68	0.6	0.7	0.8	0.0032	6	15
0.75	1	80	1450	6.2	3.1	5.8	0.49	2.4	2.3	57.5	66	70	0.6	0.72	0.82	0.0032	6	15
1.1	1.5	90S	1430	7.65	3.8	7	0.75	2.6	2.5	70	73.5	74.3	0.67	0.78	0.88	0.0055	6	19.5
1.5	2	90L	1440	11	5.5	5.5	0.99	2.4	2.3	70	72	74	0.61	0.72	0.8	0.0066	6	21.6
2.2	3	100L	1450	14.6	7.3	5.6	1.48	2.9	2.6	75.5	80	80	0.75	0.85	0.88	0.0097	6	30.5
3	4	112M	1440	19	9.5	6.2	1.99	2.3	2.3	71.8	77.2	78.2	0.78	0.86	0.9	0.0174	6	42.1
7.5	10	132M	1440	42	21	6	4.97	3	2.5	80	82	82	0.82	0.88	0.92	0.0559	6	78

Aluminium Frame Motors

Mechanical Data

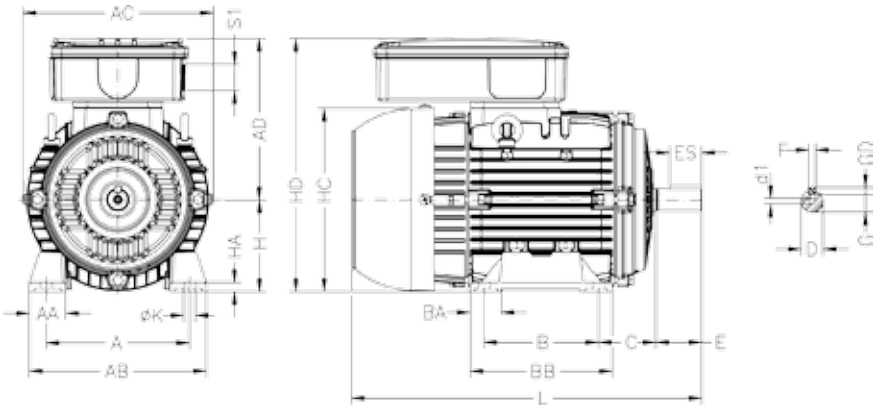

IEC FRAME	A	AA	AB	AC	AD	B	BA	BB	C	SHAFT DIMENSIONS						H	HA	HC	HD	K	L	S1	d1	BEARINGS	
										D	E	ES	F	G	GD									D.E.	N.D.E.
71	112	28	134	141	137	90	24.5	108	45	14j6	30	18	5	11	5	71	6	139	208	6	295	20	DM5	6203-ZZ	6202-ZZ
80	125	32	155	159	146	100	28	124	50	19j6	40	28	6	15.5	6	80	8	157	226	10	325		DM6	6204-ZZ	6203-ZZ
90S/L	140	35	170	179	156	125	24	146	56	24j6	50	36	8	20	7	90	9	177	246		360		DM8	6205-ZZ	
100L	160	40	196	200	166	140	30	170	63	28j6	60	45		24		100	12	198	266	12	420	25	DM10	6206-ZZ	6206-ZZ
112M	190	46	220	222	200		32		70							112		235	312		423			6307-ZZ	
132M	216	44	248	270	228	178	37	210	89	38k6	80	63	10	33	8	132		274	360		490			6308-ZZ	

"FF" Flange

IEC FRAME	"FF" FLANGE DIMENSIONS									N° OF HOLES
	FLANGE	C	LA	M	N	P	T	S	a	
71	FF-130	45	9	130	110	160	3.5	10	45°	4
80	FF-165	50	10	165	130	200		12		
90S/L		56								
100L	FF-215	63	11	215	180	250	4	15		
112M		70								
132M	FF-265	89	12	265	230	300				

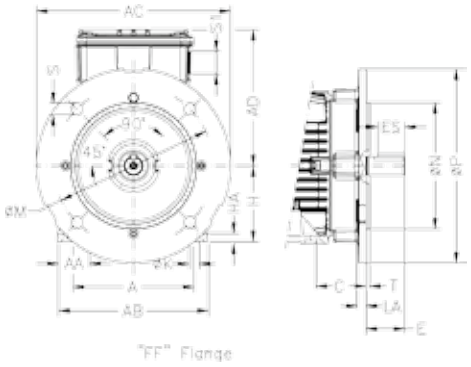

"FF" Flange

"C" Din Flange

IEC FRAME	"C" DIN FLANGE DIMENSIONS							N° OF HOLES
	FLANGE	C	M	N	P	S	T	
71	C-105	45	85	70	105	M6	2.5	4
80	C-120	50	100	80	120		3	
90S/L	C-140	56	115	95	140	M8		
100L	C-160	63	130	110	160		3.5	
112M		70						
132M	C-200	89	165	130	200	M10		

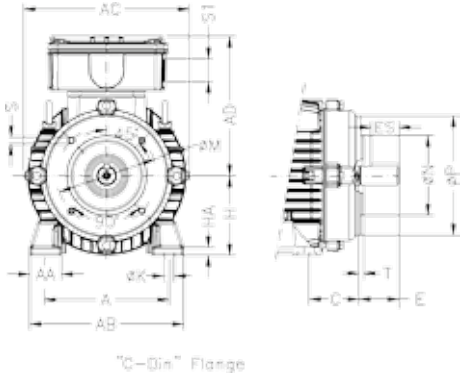

"C-Din" Flange

Fan and Exhaust Application Motors Cast Iron Frame Improved Efficiency EFF2

Standard Features:

- Three-phase, multivoltage, IP55, TEFC
- Output: 0.06 up to 355kW
- Frames: 63 up to 355M/L
- Voltage: 220-240/380-415V (up to 100L)
  380-415/660V (from 112M and up)
- Class “F” insulation (ΔT=80K)
- Continuous duty: S1
- Design N
- Ambient temperature: 40°C, at 1000 m.a.s.l.
- Squirrel cage rotor/Aluminium die cast
- V´ring seals
  - Lip seal (225 and above)
  - Grease nipple system in frame 225S/M and above
- Stainless steel nameplate AISI 316
- Regreasing nipple from frame 225S/M and above
- Metric threaded cable entries on the terminal box
- Thermistors (1 per phase) fitted in frame 160M and above
- Suitable for inverter duty applications
- Single-speed, two speed Dahlander constant and variable torque, two-speed independent winding (VI/IV constant and variable torque) or triple rated (VIII/VI/IV and XII/VI/IV)
- Metric threaded cable entries
- 1 meter long flying leads for pad mounted motors (without terminal box)
- Color - RAL 5007

Options available, on request.

Typical Applications:

These motors are designed specially for axial fan manufacturers. The design allows high output in light and compact frame sizes for the following applications:

- Fan and exhausters
- Tunnels
- Subways
- Air conditioning systems
- Underground coal mines
- Shopping centers
- Supermarkets
- Other applications

Bearings
WEG motors are fitted with the highest quality bearings selected from the best manufacturers in the world and designed to ensure long life of the motor even under heavy working conditions.
WEG also uses the Super-Premium Polyrex EM polyurea grease that is specially formulated for electric motor bearings. Its advanced thickener formulation provides low noise characteristics, improved bearing performance and protection.

Nameplate
Stainless steel nameplate ensuring a permanent record of all motor data.

Winding
The wire is enameled with class H varnish. Supplied with patented WISE (WEG Insulation System Evolution), which allows three times longer motor lifetime designed to operate in environments with excess of moisture and suitable for VFD application.

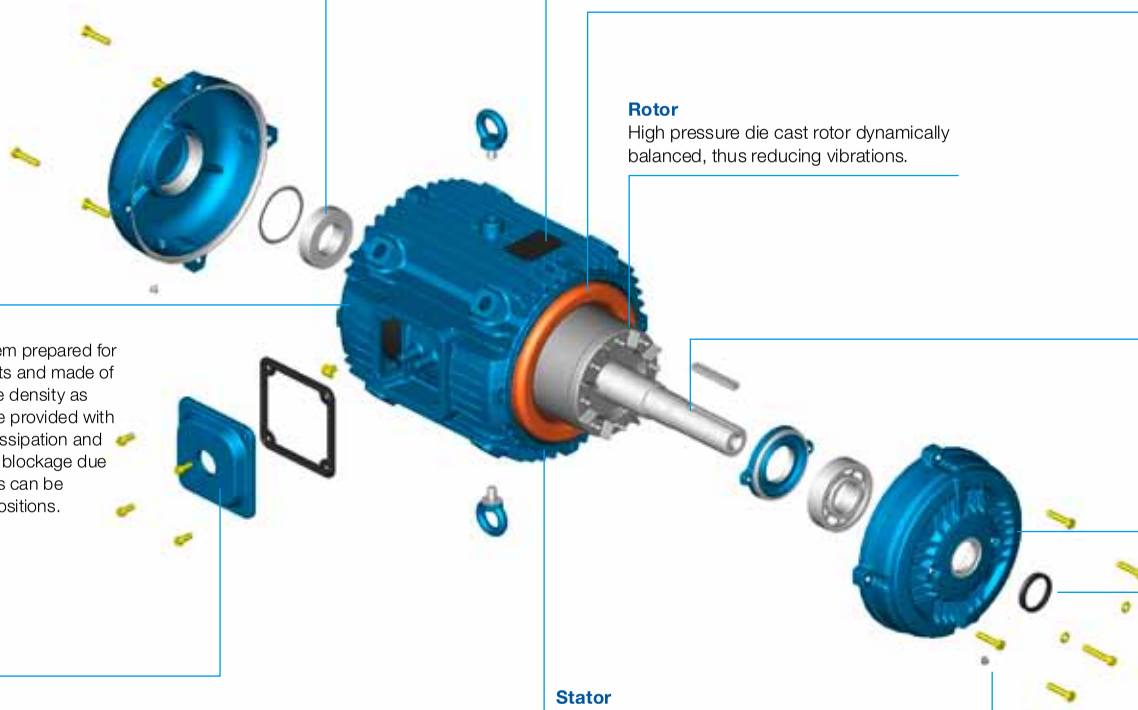

Rotor
High pressure die cast rotor dynamically balanced, thus reducing vibrations.

Shaft
WEG uses SAE/AISI 1040/45 carbon steel as standard, which provides high mechanical strength, preventing bending under load and minimizes fatigue which extends lifetime. Specially designed to withstand torques caused during motor acceleration and deceleration. Upon special design, motor shaft can have second shaft end.

Frame
Frame with special assembly system prepared for direct installation in ventilation ducts and made of FC-200 high-grade cast iron (same density as flameproof motors). The frames are provided with fins aimed at improving the heat dissipation and adequately spaced to minimize air blockage due to accumulation of dirt. The motors can be mounted in horizontal or vertical positions.

Endshields
Made of cast iron, they are provided with external fins for better heat dissipation, thus increasing bearing life.

Seals
WEG motors are fitted with either V-ring seals, Oil seals, Lip seals and may also be fitted with Labyrinth Taconite or W3Seal to ensure the best possible protection under dusty and high moisture environments.

Terminal Box
Motor supplied with terminal box base and extended leads (1 meter) allowing lead connection outside of the duct. Loose terminal box and longer power supply leads can also be supplied.

Stator
Built with low magnetic loss steel lamination reducing losses and operating temperature.

Drain Hole
Provided with plastic drain plug allowing drainage of condensed water.

Fan and Exhaust Application Motors Cast Iron Frame - Single Speed Improved Efficiency EFF2

Output		IEC Frame	Full load torque C_n (Nm)	Locked rotor current I_l/I_n	Locked rotor torque T_l/T_n	Break-down torque T_b/T_n	Inertia J kgm^2	Allowable locked rotor time Hot/Cold (s)	Weight (kg)	Sound dB (A)	Rated speed (rpm)	400 V						Full load current I_n (A)
												% of full load						
												Efficiency η			Power Factor (Cos φ)			
kW	HP											50	75	100	50	75	100	
II Pole - 3000 rpm																		
0.12	0.16	63	0.4	4.8	3	3.1	0.0001	27/59	6.3	52	2810	49	57	60.5	0.52	0.62	0.72	0.398
0.18	0.25	63	0.64	4.5	2.8	2.7	0.00014	30/66	6.6	52	2730	60	66	66.5	0.6	0.72	0.81	0.482
0.25	0.33	63	0.84	4.5	2.9	2.9	0.00016	25/55	7.1	52	2760	61.5	66.5	69.3	0.58	0.7	0.79	0.659
0.37	0.5	71	1.25	5.5	3	3.2	0.00033	23/51	9.5	56	2810	67.2	72	73.6	0.65	0.77	0.85	0.854
0.55	0.75	71	1.88	5.5	2.9	3	0.00045	16/35	10.9	56	2800	72.2	76	76	0.68	0.78	0.85	1.23
0.75	1	80	2.52	5.8	2.9	3.1	0.00079	25/55	14	59	2790	76	80	79.5	0.76	0.84	0.88	1.55
1.1	1.5	80	3.75	6	3	2.9	0.0009	13/29	14.5	59	2810	77.1	80.2	79.7	0.69	0.8	0.86	2.32
1.5	2	90S	4.9	6.8	2.8	3	0.00205	14/31	20	64	2865	78.5	81.5	82	0.7	0.8	0.85	3.11
2.2	3	90L	7.42	6.6	2.8	3	0.00242	9/20	22	64	2840	82.2	83.7	83.4	0.69	0.8	0.85	4.48
3	4	100L	9.76	7.2	2.6	2.8	0.00616	9/20	31	67	2880	83.2	85.7	85.6	0.77	0.85	0.88	5.75
4	5.5	112M	13.37	7.6	2.7	3.1	0.00842	15/33	41.1	64	2890	85	87.5	87.5	0.76	0.84	0.88	7.5
5.5	7.5	132S	17.95	8	2.7	3.2	0.02056	18/40	62.5	68	2935	84	87.1	88.3	0.73	0.82	0.87	10.3
7.5	10	132S	24.01	7.3	2.5	2.9	0.0243	10/22	66.5	68	2925	86.5	88.9	89.2	0.77	0.86	0.89	13.6
9.2	12.5	132M	29.97	8	2.8	3.2	0.02804	8/18	72	68	2930	85.5	88.5	89	0.75	0.84	0.88	17
11	15	160M	35.78	8.3	2.6	3.1	0.04706	12/26	96	70	2945	87.8	90.1	90.3	0.77	0.85	0.88	20
15	20	160M	47.7	7.8	2.5	3.2	0.05295	10/22	108.6	70	2945	89.6	91.1	91.2	0.76	0.84	0.88	27
18.5	25	160L	59.63	8.2	2.6	3.3	0.06471	10/22	121.7	70	2945	90.4	91.9	91.7	0.75	0.84	0.88	33.1
22	30	180L	71.43	8.2	2.8	3.1	0.11351	13/29	161.7	70	2950	90.5	92	92.1	0.78	0.86	0.89	38.7
30	40	200L	94.76	7.5	2.8	2.8	0.2063	19/42	239	74	2965	90	92	92.7	0.77	0.85	0.88	53.1
37	50	200L	118.45	7.6	2.9	2.9	0.22424	19/42	252.8	74	2965	91.3	92.8	93	0.75	0.84	0.88	65.3
45	60	225S/M	142.14	7.9	2.6	3.5	0.44846	24/53	411	82	2965	91.6	93.3	93.6	0.85	0.89	0.91	76.3
55	75	250S/M	177.67	8.5	2.8	3	0.50227	15/33	490	82	2965	91.8	93.5	93.8	0.84	0.89	0.91	93
75	100	280S/M	236.1	7.5	2.4	2.8	1.08256	44/97	655	83	2975	91.4	93.6	94.2	0.81	0.87	0.89	129
90	125	280S/M	295.12	8.1	2.3	2.8	1.27083	35/77	705	83	2975	92	94.1	94.5	0.79	0.87	0.9	153
110	150	315S/M	354.15	7.6	2.3	2.8	1.41204	40/88	780	84	2975	93	94.4	94.9	0.79	0.85	0.89	188
132	175	315S/M	413.87	7.5	2.3	2.8	1.64738	31/68	937	84	2970	93.2	94.8	95	0.82	0.88	0.9	223
132	180	315S/M	425.69	7.5	2.3	2.8	1.64738	31/68	937	84	2970	93.2	94.8	95	0.82	0.88	0.9	223
150	200	315S/M	472.99	7.9	2.2	2.7	2.11806	31/68	1010	84	2970	94.1	95.1	95.3	0.84	0.89	0.9	252
160	220	315S/M	520.29	7.3	2.2	2.5	2.11806	25/55	1010	84	2970	94.1	95	95.4	0.85	0.89	0.9	269
185	250	315S/M	590.25	8.2	2.4	2.8	2.11806	28/62	1010	84	2975	94.8	95.3	95.5	0.8	0.86	0.88	318
200	270	355M/L	635.33	7.2	1.8	2.6	4.82631	70/154	1490	81	2985	93.5	95	95.4	0.89	0.91	0.92	329
220	300	355M/L	705.93	8.5	2.2	3	5.17105	65/143	1650	81	2985	94.2	95.4	96	0.88	0.91	0.92	360
250	340	355M/L	800.05	7.8	2.2	2.5	5.74561	65/143	1750	81	2985	94.4	95.8	96	0.88	0.91	0.92	409
HIGH-OUTPUT DESIGN																		
0.37	0.5	63	1.28	5.2	3.1	2.9	0.00021	14/31	8	52	2740	67	71	71.3	0.57	0.7	0.79	0.948
0.75	1	71	2.5	6.2	3.1	3.1	0.00052	8/18	11	56	2810	69	73	74	0.65	0.76	0.84	1.74
1.5	2	80	5.07	6	3	2.7	0.00096	10/22	15.5	59	2770	77	78.5	77.7	0.7	0.82	0.87	3.2
1.5	2	90L	4.9	6.8	2.8	3	0.00205	14/31	20	64	2865	78.5	81.5	82	0.7	0.8	0.85	3.11
2.2	3	90S	7.39	7	3	3.2	0.0023	8/18	21	64	2850	81.5	83	83.1	0.64	0.77	0.84	4.55
3	4	90L*	9.93	6.2	3.2	3.1	0.00266	6/13	23.5	64	2830	81	82	82	0.55	0.68	0.78	6.77
4	5.5	100L	13.46	7.5	2.9	3.1	0.00672	7/15	33	67	2870	81	82.3	82.5	0.72	0.81	0.86	8.14
5.5	7.5	112M	18.36	7.7	2.5	3	0.00995	10/22	43	64	2870	86.5	87.5	87.5	0.8	0.87	0.9	10.1
7.5	10	112M*	24.47	7.6	3	3	0.00995	6/13	45	64	2870	86.5	87.5	87.5	0.59	0.72	0.81	15.3
11	15	132M	36.02	7.2	2.4	3.2	0.03178	13/29	74.4	68	2925	90	90.6	90.2	0.76	0.84	0.88	20
22	30	160L*	71.92	7.5	2.5	3	0.06766	6/13	124.1	70	2930	90	90.6	90.7	0.72	0.82	0.86	40.7
30	40	180L*	95.4	8.7	2.5	3.1	0.13622	9/20	183.6	70	2945	92	92.7	92.7	0.74	0.83	0.87	53.7
55	75	225S/M	177.67	8.5	2.8	3	0.50227	15/33	490	82	2965	91.8	93.5	93.8	0.84	0.89	0.91	93
75	100	250S/M	236.9	8.3	3	3.4	0.55609	10/22	490	82	2965	92.5	93.6	93.6	0.83	0.88	0.9	129
110	150	280S/M	354.15	7.6	2.3	2.8	1.41204	40/88	780	83	2975	93	94.4	94.9	0.79	0.85	0.89	188
132	175	280S/M	413.87	7.5	2.3	2.8	1.64738	31/68	937	83	2970	93.2	94.8	95	0.82	0.88	0.9	223
200	270	315S/M	636.4	7.9	2.2	2.9	2.16513	49/108	1045	84	2980	95.2	95.8	96.1	0.79	0.84	0.87	345

Notes:
**Class "F" insulation with ΔT105K*
Standard voltage, connection and frequency: 220-240V Δ 50Hz
380-415V Y 50Hz
380-415V Δ 50Hz
660-690V Y 50Hz
The values shown are subject to change without prior notice. To obtain guaranteed values please access our website.

Fan and Exhaust Application Motors Cast Iron Frame - Single Speed Improved Efficiency EFF2

Output		380 V								415 V							
		Rated speed (rpm)	% of full load						Full load current I_n (A)	Rated speed (rpm)	% of full load						Full load current I_n (A)
			Efficiency η			Power Factor (Cos φ)					Efficiency η			Power Factor (Cos φ)			
kW	HP		50	75	100	50	75	100			50	75	100	50	75	100	
II Pole - 3000 rpm																	
0.12	0.16	2780	51	58	62	0.56	0.67	0.77	0.382	2820	46	55	59.5	0.49	0.59	0.68	0.413
0.18	0.25	2700	62	66.5	66	0.65	0.76	0.84	0.493	2755	58	64.5	66	0.55	0.67	0.77	0.493
0.25	0.33	2730	63.5	67.5	69.5	0.63	0.75	0.82	0.666	2790	59.5	65	68.5	0.54	0.66	0.75	0.677
0.37	0.5	2790	68.8	72.5	73.5	0.7	0.81	0.87	0.879	2825	66	71.5	73.6	0.6	0.73	0.82	0.853
0.55	0.75	2770	73.1	76	75.2	0.73	0.82	0.87	1.28	2820	71.1	75.7	76.2	0.64	0.75	0.84	1.2
0.75	1	2770	76.5	79.7	78.5	0.79	0.86	0.89	1.63	2810	75.5	80.1	80	0.73	0.82	0.87	1.5
1.1	1.5	2790	78.2	80.4	79.3	0.74	0.84	0.88	2.39	2825	76	79.8	79.8	0.64	0.76	0.84	2.28
1.5	2	2850	79.3	81.6	81.6	0.74	0.83	0.87	3.21	2875	77.5	81.5	82.1	0.66	0.77	0.83	3.06
2.2	3	2820	82.8	83.6	83.3	0.75	0.84	0.87	4.61	2850	81.5	83.6	84.3	0.64	0.76	0.83	4.37
3	4	2870	83.5	85.6	85.1	0.8	0.86	0.89	6.02	2890	82.8	85.6	85.6	0.74	0.84	0.87	5.6
4	5.5	2880	85.5	87.5	87.2	0.8	0.86	0.89	7.83	2900	84.5	87.4	88.2	0.72	0.82	0.87	7.25
5.5	7.5	2930	84.5	87.5	88.2	0.77	0.85	0.89	10.6	2940	83.5	86.8	88.2	0.69	0.8	0.85	10.2
7.5	10	2915	87	89	88.8	0.81	0.87	0.9	14.3	2930	86	88.8	89.3	0.73	0.83	0.87	13.4
9.2	12.5	2920	86	88.7	89	0.79	0.87	0.9	17.5	2935	85	88.3	89	0.71	0.81	0.86	16.7
11	15	2940	88.3	90.1	90.2	0.8	0.86	0.89	20.8	2950	87.3	90	90.4	0.74	0.83	0.87	19.5
15	20	2935	90.1	91.2	91	0.81	0.87	0.89	28.1	2950	89.1	91	91.2	0.72	0.81	0.87	26.3
18.5	25	2940	90.7	92	91.5	0.78	0.86	0.89	34.5	2950	90.1	91.8	92	0.73	0.83	0.86	32.5
22	30	2945	91	92.1	92	0.82	0.88	0.9	40.4	2955	90	91.9	92.1	0.75	0.84	0.87	38.2
30	40	2960	90.5	92.1	92.6	0.8	0.87	0.89	55.3	2970	89.5	91.8	92.7	0.73	0.83	0.87	51.8
37	50	2960	91.7	93	93	0.8	0.87	0.89	67.9	2965	90.8	92.6	93	0.7	0.81	0.86	64.4
45	60	2960	91.9	93.4	93.5	0.86	0.9	0.92	79.5	2970	91.5	93.3	93.9	0.84	0.88	0.9	74.1
55	75	2965	91.8	93.2	93.5	0.86	0.91	0.92	97.1	2970	91.6	93.5	94	0.82	0.88	0.91	89.5
75	100	2970	91.9	93.6	94.3	0.84	0.88	0.9	134	2980	91	93.6	94.2	0.78	0.85	0.88	126
90	125	2970	92.3	93.9	94.5	0.82	0.88	0.9	161	2975	91.5	94.1	94.5	0.77	0.86	0.89	149
110	150	2970	93.1	94.4	94.9	0.81	0.87	0.9	196	2975	92.2	94.4	94.8	0.75	0.83	0.88	183
132	175	2965	93.5	94.7	94.8	0.84	0.89	0.91	232	2970	93	94.8	95.2	0.8	0.87	0.9	214
132	180	2965	93.5	94.7	94.8	0.84	0.89	0.91	232	2970	93	94.8	95.2	0.8	0.87	0.9	214
150	200	2970	94.2	95	95.3	0.86	0.9	0.91	263	2975	94	95	95.3	0.82	0.88	0.9	243
160	220	2970	94.2	95	95.3	0.86	0.9	0.91	280	2975	94	95	95.4	0.83	0.88	0.89	262
185	250	2970	95	95.4	95.5	0.82	0.87	0.89	331	2975	94.5	95.2	95.5	0.78	0.84	0.87	310
200	270	2980	93.7	95	95.3	0.9	0.92	0.92	347	2985	93.3	94.9	95.4	0.88	0.9	0.91	321
220	300	2985	94.5	95.5	95.9	0.89	0.92	0.93	375	2990	93.9	95.3	96	0.86	0.9	0.92	347
250	340	2980	94.5	95.8	96	0.9	0.92	0.93	425	2985	94.3	95.8	96.1	0.87	0.91	0.92	393
HIGH-OUTPUT DESIGN																	
0.37	0.5	2710	69.5	71.7	71	0.62	0.75	0.83	0.954	2765	65	70	71	0.52	0.66	0.76	0.954
0.75	1	2790	71	74	74	0.7	0.8	0.87	1.77	2830	67	71.5	73.5	0.6	0.71	0.8	1.77
1.5	2	2750	78	78.5	76.5	0.75	0.85	0.89	3.35	2790	76	78.5	78.5	0.65	0.78	0.85	3.13
1.5	2	2850	79.3	81.6	81.6	0.74	0.83	0.87	3.21	2875	77.5	81.5	82.1	0.66	0.77	0.83	3.06
2.2	3	2830	82.3	83.3	83	0.71	0.82	0.87	4.63	2860	80.2	82.5	83.1	0.58	0.72	0.8	4.6
3	4	2800	82	82.5	81.5	0.61	0.74	0.81	6.9	2845	80	81.5	81.5	0.5	0.64	0.74	6.92
4	5.5	2850	81.5	82.5	82	0.77	0.84	0.88	8.42	2890	80.3	82	82.5	0.68	0.78	0.84	8.03
5.5	7.5	2860	87	87.5	87.2	0.83	0.89	0.91	10.5	2880	86	87.5	87.7	0.77	0.85	0.89	9.8
7.5	10	2850	86.5	87	87	0.66	0.79	0.85	15.4	2885	85	87	87	0.53	0.67	0.76	15.8
11	15	2920	89.5	90.8	90.2	0.8	0.87	0.9	20.6	2930	89.3	90.5	90.2	0.72	0.82	0.86	19.7
22	30	2925	90.5	90.7	90.5	0.77	0.85	0.88	42	2935	89.5	90.5	90.7	0.68	0.79	0.84	40.2
30	40	2940	92	92.3	92.3	0.78	0.84	0.88	56.1	2950	92	92.7	92.7	0.71	0.8	0.85	53
55	75	2965	91.8	93.2	93.5	0.86	0.91	0.92	97.1	2970	91.6	93.5	94	0.82	0.88	0.91	89.5
75	100	2960	92.6	93.3	93.3	0.85	0.89	0.91	134	2965	92.5	93.7	94.2	0.81	0.87	0.9	123
110	150	2970	93.1	94.4	94.9	0.81	0.87	0.9	196	2975	92.2	94.4	94.8	0.75	0.83	0.88	183
132	175	2965	93.5	94.7	94.8	0.84	0.89	0.91	232	2970	93	94.8	95.2	0.8	0.87	0.9	214
200	270	2975	95.5	96	96.2	0.81	0.86	0.89	355	2980	95	95.6	96	0.73	0.82	0.86	337

Fan and Exhaust Application Motors Cast Iron Frame - Single Speed Improved Efficiency EFF2

Output		IEC Frame	Full load torque C_n (Nm)	Locked rotor current I_l/I_n	Locked rotor torque T_l/T_n	Break-down torque T_b/T_n	Inertia J kgm²	Allowable locked rotor time Hot/Cold (s)	Weight (kg)	Sound dB (A)	Rated speed (rpm)	400 V						Full load current I_n (A)
												% of full load						
												Efficiency η			Power Factor (Cos φ)			
kW	HP											50	75	100	50	75	100	
IV Pole - 1500 rpm																		
0.12	0.16	63	0.79	4.2	2.4	2.5	0.00045	20/44	7	44	1415	45	54	58.5	0.46	0.56	0.67	0.442
0.18	0.25	63	1.25	4	2.2	2.5	0.00056	23/51	7.3	44	1400	53.8	59.5	62	0.52	0.63	0.72	0.582
0.25	0.33	71	1.64	5	3	3.1	0.00079	48/106	10.7	43	1410	68.5	71.5	73	0.5	0.61	0.7	0.706
0.37	0.5	71	2.52	4.4	2.7	2.8	0.00079	37/81	10.9	43	1395	68	72	73.5	0.48	0.6	0.7	1.04
0.55	0.75	80	3.68	6	2.6	2.8	0.00242	17/37	14	44	1430	69	73	75	0.56	0.69	0.78	1.36
0.75	1	80	4.96	5.5	2.4	2.6	0.00294	14/31	14.8	44	1415	73.5	76.2	76.2	0.62	0.74	0.83	1.71
1.1	1.5	90S	7.37	6.5	3	3	0.00504	13/29	20	49	1430	76	80	80.6	0.57	0.69	0.78	2.53
1.5	2	90L	9.89	6.2	2.7	2.7	0.00672	12/26	23	49	1420	80.3	82	81.7	0.64	0.77	0.83	3.19
2.2	3	100L	14.84	6.7	2.7	2.9	0.00842	14/31	25.1	53	1420	81	82.3	83	0.65	0.78	0.83	4.61
3	4	100L	19.93	6.5	2.7	2.7	0.00995	10/22	34	53	1410	83.6	85	84.7	0.68	0.79	0.86	5.94
4	5.5	112M	27.02	7.5	2.7	2.8	0.01875	12/26	45.1	56	1430	86	87.4	87.1	0.7	0.81	0.87	7.62
5.5	7.5	132S	35.96	8	2.4	3	0.04652	11/24	62	60	1465	85.4	87.7	88.5	0.68	0.79	0.85	10.6
7.5	10	132M	47.95	8	2.5	2.8	0.05427	8/18	64.5	60	1465	86.4	88.4	88.6	0.7	0.8	0.86	14.2
9.2	12.5	160M	60.34	6	2.2	2.4	0.06524	15/33	95	67	1455	86	87.7	88.8	0.69	0.79	0.84	17.8
11	15	160M	72.41	6	2.3	2.5	0.08029	16/35	98.8	67	1455	87.6	89.4	89.9	0.7	0.79	0.84	21
15	20	160L	96.55	6	2.3	2.4	0.10539	13/29	117.9	67	1455	89	90.4	90.6	0.69	0.79	0.84	28.4
18.5	25	180M	119.46	7	2.7	2.8	0.17939	18/40	163.4	64	1470	89.8	91.5	92.1	0.68	0.79	0.84	34.5
22	30	180L	143.35	7.5	2.8	2.8	0.21528	14/31	176.7	64	1470	91	92.2	92.4	0.67	0.78	0.83	41.4
30	40	200L	190.48	6.5	2.2	2.5	0.33095	17/37	239.7	69	1475	91.8	93	93	0.75	0.82	0.85	54.8
37	50	225S/M	237.3	7.2	2.3	2.7	0.62988	20/44	350	70	1480	91.2	92.2	92.8	0.76	0.85	0.88	65.4
45	60	225S/M	285.72	7	2.3	2.7	0.76985	16/35	382	70	1475	91	92.9	93.5	0.76	0.85	0.88	78.9
55	75	250S/M	357.15	7	2.3	2.6	0.97981	16/35	460	70	1475	93	93.5	93.7	0.78	0.86	0.89	95.2
75	100	280S/M	472.99	6.7	2.1	2.4	2.32858	44/97	735	76	1485	92.4	93.8	94.3	0.81	0.86	0.88	130
90	125	280S/M	591.24	7.1	2.4	2.5	2.56947	31/68	802	76	1485	92.3	93.9	94.2	0.8	0.86	0.88	157
110	150	315S/M	709.49	7.1	2.3	2.6	2.81036	27/59	865	77	1485	92.8	94.4	94.4	0.78	0.85	0.88	191
132	175	315S/M	827.74	7.3	2.5	2.6	3.77391	31/68	1010	77	1485	93.3	94.7	95.1	0.78	0.85	0.88	228
132	180	315S/M	851.39	7.3	2.5	2.6	3.77391	31/68	1010	77	1485	93.3	94.7	95.1	0.78	0.85	0.88	228
150	200	315S/M	945.99	7.5	2.4	2.5	3.77391	22/48	1010	77	1485	93	95	95.3	0.77	0.84	0.86	264
160	220	315S/M	1044.1	7	2.4	2.7	3.77391	22/48	1010	77	1480	93.3	95.1	95.5	0.75	0.83	0.87	278
185	250	315S/M*	1182.49	7.3	2.3	2.5	3.77391	15/33	1010	77	1485	93.5	95.3	95.5	0.75	0.82	0.86	325
200	270	355M/L	1272.8	6.6	2.3	2.2	6.34151	44/97	1525	79	1490	94.8	95.2	95.4	0.78	0.85	0.87	348
220	300	355M/L	1414.22	7	2.1	2.3	6.88507	39/86	1525	79	1490	94.2	95.2	95.4	0.8	0.86	0.88	378
250	340	355M/L	1602.78	6.9	2.2	2.5	7.57882	36/79	1615	79	1490	94.3	95.2	95.8	0.8	0.86	0.88	428
260	350	355M/L	1649.92	6.5	2.2	2.3	7.57882	30/66	1615	79	1490	94.3	95.2	95.8	0.8	0.86	0.88	445
280	380	355M/L	1791.35	7.1	2.2	2.4	9.0224	39/86	1770	79	1490	95	95.7	95.8	0.81	0.87	0.88	479
300	400	355M/L	1885.63	6.7	2.2	2.4	9.92464	47/103	1770	79	1490	94.5	95.6	95.8	0.81	0.87	0.89	508
315	430	355M/L	2027.05	6.7	2.2	2.4	9.92464	42/92	1770	79	1490	94.8	95.9	96.2	0.79	0.86	0.88	537
330	450	355M/L	2121.33	6.5	2.3	2.3	10.82688	32/70	1865	79	1490	95	96	96.2	0.81	0.87	0.89	556
355	482	355M/L*	2272.18	7.9	2.4	2.5	11.6813	28/62	1865	79	1490	95.8	96.3	96.3	0.8	0.87	0.88	605
HIGH-OUTPUT DESIGN																		
0.25	0.33	63	1.64	5	3.1	3.1	0.00067	17/37	8.5	44	1415	52	60	62	0.44	0.54	0.65	0.895
0.55	0.75	71	3.8	5	2.8	2.9	0.00096	19/42	12	43	1385	66	70.5	72	0.45	0.58	0.68	1.62
1.5	2	90S	10	5.8	2.6	2.6	0.00504	8/18	21	49	1405	73	75	76.2	0.62	0.76	0.82	3.46
2.2	3	90L	14.94	5.8	2.7	2.5	0.00672	8/18	23	49	1410	75	76.5	76.5	0.57	0.71	0.8	5.19
4	5.5	100L*	27.79	6.7	2.6	2.6	0.01072	7/15	34	53	1390	81.5	82.2	82	0.64	0.76	0.83	8.483
5.5	7.5	112M*	36.33	6.5	2.5	2.6	0.01875	8/18	44.9	56	1450	84	85.7	85.7	0.54	0.66	0.75	12.4
7.5	10	132S	47.95	8	2.5	2.8	0.05427	8/18	68	60	1465	86.4	88.4	88.6	0.7	0.8	0.86	14.2
9.2	12.5	132M	59.93	8	2.5	3	0.06202	7/15	74	60	1465	86	88.2	88.5	0.68	0.8	0.85	17.7
11	15	132M/L*	72.41	7.5	2.4	2.7	0.06978	5/11	83	60	1455	87	88.4	88	0.7	0.81	0.88	20.5
15	20	160M	96.55	6	2.3	2.4	0.10539	13/29	121	67	1455	89	90.4	90.6	0.69	0.79	0.84	28.4
18.5	25	160L*	120.69	6	2.4	2.4	0.11542	12/26	121	67	1455	88.5	90	90	0.64	0.76	0.82	36.2
30	40	180L*	192.44	7.2	3	2.9	0.2153	7/15	177.2	64	1460	89	90.5	90.5	0.61	0.73	0.8	59.8
30	40	200M	190.48	6.5	2.2	2.5	0.33095	17/37	244	69	1475	91.8	93	93	0.75	0.82	0.85	54.8
37	50	200L	238.91	7	2.3	2.5	0.38611	14/31	260	69	1470	91.5	92.5	92.3	0.73	0.82	0.86	67.3
45	60	200L*	285.72	7.1	2.3	2.5	0.38611	10/22	258.9	69	1475	91.3	92.4	92.5	0.65	0.76	0.81	86.7
55	75	225S/M	357.15	7	2.3	2.6	0.97981	16/35	407.2	70	1475	93	93.5	93.7	0.78	0.86	0.89	95.2
75	100	250S/M	474.59	7.2	2.4	2.6	1.15478	12/26	510	70	1480	92.5	93.6	93.7	0.77	0.85	0.87	133
110	150	280S/M	709.49	7.1	2.3	2.6	2.81036	27/59	865	76	1485	92.8	94.4	94.4	0.78	0.85	0.88	191
132	175	280S/M	827.74	7.5	2.3	2.6	3.37243	13/29	940	76	1485	93	94	94.6	0.78	0.85	0.88	229
200	270	315S/M*	1281.4	6.7	2.3	2.6	3.77391	17/37	1010	77	1480	94.2	94.8	95.4	0.74	0.82	0.85	356

Notes:
**Class "F" insulation with ΔT105K*
Standard voltage, connection and frequency: 220-240V Δ 50Hz — 380-415V Δ 50Hz
380-415V Y 50Hz — 660-690V Y 50Hz
The values shown are subject to change without prior notice. To obtain guaranteed values please access our website.

Fan and Exhaust Application Motors Cast Iron Frame - Single Speed Improved Efficiency EFF2

Output		380 V								415 V							
		Rated speed (rpm)	% of full load						Full load current I_n (A)	Rated speed (rpm)	% of full load						Full load current I_n (A)
			Efficiency η			Power Factor (Cos φ)					Efficiency η			Power Factor (Cos φ)			
kW	HP		50	75	100	50	75	100			50	75	100	50	75	100	
IV Pole - 1500 rpm																	
0.12	0.16	1405	47	55	59	0.49	0.6	0.7	0.441	1425	42	52	58	0.43	0.52	0.63	0.457
0.18	0.25	1385	55.8	60.5	62.5	0.55	0.67	0.76	0.576	1410	51	57.5	61	0.48	0.59	0.69	0.595
0.25	0.33	1400	70	72	72.5	0.53	0.65	0.72	0.728	1420	67	71	73	0.47	0.58	0.68	0.701
0.37	0.5	1385	70	73	73.6	0.52	0.65	0.73	1.05	1405	65	71	73.2	0.44	0.56	0.67	1.05
0.55	0.75	1420	70	73.5	75	0.61	0.73	0.81	1.38	1440	67	72.5	74.6	0.53	0.66	0.75	1.37
0.75	1	1400	75	76.5	76	0.66	0.78	0.85	1.76	1430	72	76	76.2	0.59	0.71	0.81	1.69
1.1	1.5	1415	77.5	80.5	80.5	0.63	0.74	0.81	2.56	1435	74.5	79	80.3	0.53	0.64	0.74	2.58
1.5	2	1410	81.2	82.2	81	0.68	0.8	0.85	3.31	1430	79.3	81.5	81.8	0.61	0.74	0.81	3.15
2.2	3	1410	81.5	82	81.7	0.69	0.81	0.85	4.81	1430	80.5	82.3	83	0.61	0.75	0.81	4.55
3	4	1400	84	84.9	84.2	0.72	0.82	0.87	6.22	1420	83.2	85.1	84.9	0.65	0.77	0.84	5.85
4	5.5	1420	86.5	87.5	86.7	0.74	0.84	0.89	7.88	1440	85.2	87.2	86.7	0.67	0.78	0.84	7.64
5.5	7.5	1460	86.7	88.3	88.3	0.73	0.82	0.87	10.9	1470	84.2	87	88.4	0.64	0.75	0.83	10.4
7.5	10	1465	87	88.6	88.4	0.75	0.84	0.88	14.6	1470	85.6	88	88.6	0.65	0.77	0.83	14.2
9.2	12.5	1450	86.5	87.8	88.2	0.73	0.82	0.85	18.6	1460	85.5	87.4	88.8	0.64	0.76	0.82	17.6
11	15	1450	88.3	89.6	89.2	0.74	0.82	0.85	22	1460	86.8	89	89.8	0.65	0.76	0.82	20.8
15	20	1450	89.5	90.5	90.1	0.73	0.82	0.86	29.4	1460	88.4	90.3	90.6	0.67	0.78	0.83	27.8
18.5	25	1465	90.3	91.7	91.7	0.72	0.81	0.85	36.1	1470	89.3	91.3	92.1	0.65	0.76	0.82	34.1
22	30	1465	91.5	92.4	92.3	0.72	0.81	0.85	42.6	1475	90.5	92	92.5	0.63	0.75	0.81	40.8
30	40	1470	92.2	93	92.6	0.78	0.84	0.86	57.2	1480	91.5	93	93.2	0.72	0.8	0.84	53.3
37	50	1475	91.6	92.4	92.5	0.79	0.86	0.89	68.3	1480	90.8	92.1	92.9	0.72	0.83	0.87	63.7
45	60	1475	91.3	92.8	93.5	0.8	0.87	0.89	82.2	1480	91	92.9	93.5	0.72	0.83	0.87	77
55	75	1475	92.8	93.5	93.4	0.83	0.88	0.91	98.3	1480	92.5	93.4	93.6	0.77	0.85	0.89	91.9
75	100	1480	92.8	93.9	94.2	0.83	0.87	0.88	137	1485	92.2	93.8	94.3	0.8	0.85	0.87	127
90	125	1480	92.6	94.1	94.2	0.82	0.87	0.89	163	1485	92	93.9	94.2	0.78	0.85	0.88	151
110	150	1480	92.8	93.6	94.2	0.8	0.86	0.88	202	1485	92.8	94.4	94.5	0.76	0.83	0.87	186
132	175	1480	93.5	94.9	95.1	0.81	0.86	0.89	237	1485	93.3	94.7	95.1	0.76	0.84	0.87	222
132	180	1480	93.5	94.9	95.1	0.81	0.86	0.89	237	1485	93.3	94.7	95.1	0.76	0.84	0.87	222
150	200	1480	93.3	94.6	95.2	0.79	0.85	0.87	275	1485	92.9	95	95.3	0.75	0.83	0.85	258
160	220	1480	93	95	95.4	0.78	0.85	0.88	290	1485	94.2	95.1	95.5	0.73	0.82	0.86	271
185	250	1480	93.6	95.1	95.5	0.77	0.83	0.87	338	1485	94	95.2	95.5	0.72	0.8	0.85	317
200	270	1485	94.8	95	95.2	0.8	0.86	0.88	363	1490	94.5	95.1	95.3	0.76	0.84	0.86	339
220	300	1485	94.5	95.2	95.4	0.82	0.87	0.89	394	1490	94	95	95.5	0.78	0.85	0.87	368
250	340	1485	94.5	95.2	95.7	0.82	0.87	0.89	446	1490	94.1	95	95.7	0.77	0.85	0.87	418
260	350	1485	94.5	95.2	95.7	0.82	0.87	0.89	464	1490	94.1	95	95.7	0.77	0.85	0.87	434
280	380	1485	95.1	95.6	95.7	0.83	0.88	0.89	499	1490	95	95.6	95.8	0.79	0.86	0.87	467
300	400	1485	94.7	95.6	95.6	0.83	0.88	0.89	536	1490	94.3	95.5	95.7	0.79	0.86	0.88	496
315	430	1485	95	95.8	96.1	0.83	0.87	0.89	560	1490	94.5	95.8	96.2	0.76	0.84	0.87	524
330	450	1485	95.2	96	96.1	0.83	0.88	0.9	580	1490	94.8	95.8	96.2	0.79	0.86	0.88	542
355	482	1490	95.9	96.2	96.2	0.82	0.88	0.89	630	1490	95.7	96.3	96.3	0.78	0.86	0.88	583
HIGH-OUTPUT DESIGN																	
0.25	0.33	1405	54	61	63	0.49	0.6	0.7	0.861	1420	49	58	61	0.41	0.51	0.6	0.95
0.55	0.75	1370	69	72	72.5	0.51	0.63	0.72	1.6	1400	62	68	71	0.42	0.53	0.64	1.68
1.5	2	1385	72	74	75	0.68	0.8	0.85	3.57	1410	73	74.5	75.5	0.58	0.72	0.8	3.45
2.2	3	1390	76	77	76	0.65	0.75	0.83	5.3	1420	73	76	76.5	0.53	0.66	0.76	5.26
4	5.5	1380	82	82	81	0.69	0.8	0.85	8.827	1400	81	82.1	82.5	0.6	0.73	0.81	8.327
5.5	7.5	1445	85	86	85.7	0.6	0.72	0.79	12.3	1455	82	85.7	85.7	0.49	0.62	0.71	12.6
7.5	10	1465	87	88.6	88.4	0.75	0.84	0.88	14.6	1470	85.6	88	88.6	0.65	0.77	0.83	14.2
9.2	12.5	1460	86.7	88.2	88.2	0.74	0.83	0.87	18.2	1465	85.3	87.7	88.2	0.63	0.76	0.82	17.7
11	15	1450	87.5	88.4	88	0.75	0.84	0.89	21.4	1460	86.5	88.4	88.4	0.67	0.79	0.86	20.1
15	20	1450	89.5	90.5	90.1	0.73	0.82	0.86	29.4	1460	88.4	90.3	90.6	0.67	0.78	0.83	27.8
18.5	25	1450	89	90	89.4	0.7	0.8	0.84	37.4	1460	88	90	90	0.6	0.73	0.8	35.7
30	40	1460	89.5	90.3	90.3	0.66	0.77	0.83	60.7	1465	88.5	90.5	90.6	0.59	0.71	0.78	59
30	40	1470	92.2	93	92.6	0.78	0.84	0.86	57.2	1480	91.5	93	93.2	0.72	0.8	0.84	53.3
37	50	1465	92	92.5	92	0.77	0.84	0.87	70.2	1475	91	92.5	92.5	0.69	0.8	0.85	65.5
45	60	1470	91.5	92.4	92.3	0.69	0.79	0.83	89.2	1475	91.1	92.3	92.5	0.61	0.73	0.79	85.7
55	75	1475	92.8	93.5	93.4	0.83	0.88	0.91	98.3	1480	92.5	93.4	93.6	0.77	0.85	0.89	91.9
75	100	1475	92.6	93.4	93.5	0.8	0.86	0.88	138	1480	92.6	93.7	93.6	0.74	0.84	0.87	128
110	150	1480	92.8	93.6	94.2	0.8	0.86	0.88	202	1485	92.8	94.4	94.5	0.76	0.83	0.87	186
132	175	1480	93	93.5	94.3	0.81	0.86	0.89	241	1485	92.2	94.7	94.7	0.76	0.84	0.87	223
200	270	1480	94.5	95	95.4	0.78	0.84	0.86	370	1485	93.8	94.6	95.4	0.7	0.8	0.84	347

Fan and Exhaust Application Motors Cast Iron Frame - Single Speed Improved Efficiency EFF2

Output		IEC Frame	Full load torque C_n (Nm)	Locked rotor current I_l/I_n	Locked rotor torque T_l/T_n	Break-down torque T_b/T_n	Inertia J kgm^2	Allowable locked rotor time Hot/Cold (s)	Weight (kg)	Sound dB (A)	Rated speed (rpm)	400 V						Full load current I_n (A)
												% of full load						
												Efficiency η			Power Factor (Cos φ)			
kW	HP											50	75	100	50	75	100	
VI Pole - 1000 rpm																		
0.12	0.16	63	3.5	1.23	2.2	2.1	0.00067	41/90	8	43	910	42	50	54.5	0.46	0.55	0.65	0.489
0.18	0.25	71	3.3	1.94	2	2.2	0.00079	50/110	10.5	43	905	46	54	57	0.46	0.55	0.62	0.735
0.25	0.33	71	3.5	2.58	2.2	2.2	0.00096	43/95	11.5	43	900	53	60.5	64	0.4	0.5	0.57	0.989
0.37	0.5	80	4.5	3.78	2.5	2.5	0.00242	12/26	14	43	930	54	62.5	65	0.45	0.57	0.67	1.23
0.55	0.75	80	4.5	5.66	2.3	2.3	0.00311	10/22	15.5	43	930	60	65	67	0.5	0.63	0.73	1.62
0.75	1	90S	4.8	7.63	2.1	2.1	0.00504	16/35	20.8	45	920	70	72.6	72.4	0.54	0.67	0.76	1.97
1.1	1.5	90L	4.8	11.39	2.3	2.2	0.00672	14/31	20.9	45	925	71	75.2	75.2	0.5	0.64	0.75	2.82
1.5	2	100L	4.8	14.94	2.2	2.5	0.01121	18/40	29	44	940	74	77.3	77.5	0.53	0.66	0.74	3.78
2.2	3	112M	5	22.42	2.2	2.3	0.01682	14/31	34.5	48	940	77.5	80.5	80.1	0.53	0.66	0.74	5.36
3	4	132S	5.3	29.27	2	2.2	0.03489	20/44	55	52	960	80	82.7	82.5	0.58	0.7	0.77	6.82
4	5.5	132M	6	40.24	2.1	2.3	0.05039	18/40	65	52	960	83.6	85.5	85.8	0.59	0.7	0.77	8.74
5.5	7.5	132M	6.4	54.87	2.3	2.4	0.06202	14/31	69	52	960	84	85.8	85.8	0.54	0.66	0.74	12.5
7.5	10	160M	6.1	72.41	2.3	2.6	0.12209	17/37	97.3	56	970	87	88.2	88	0.62	0.74	0.81	15.2
9.2	12.5	160L	6.5	90.51	2.3	2.8	0.14364	12/26	115	56	970	86.5	88	87.6	0.61	0.74	0.81	18.7
11	15	160L	6.6	108.62	2.4	2.9	0.17595	13/29	122.8	56	970	87.2	88.3	88.3	0.62	0.75	0.82	21.9
15	20	180L	7.5	145.57	2.5	2.6	0.30338	9/20	181	56	965	89.1	90.1	89.8	0.8	0.88	0.91	26.5
18.5	25	200L	6	180.1	2.1	2.3	0.3767	15/33	219	58	975	89.7	90.7	90.2	0.74	0.82	0.86	34.4
22	30	200L	6	216.12	2.3	2.4	0.41258	14/31	235	58	975	89	90.9	91.3	0.7	0.79	0.84	41.4
30	40	225S/M	7.2	285.24	2.6	2.7	0.98842	20/44	366	61	985	90.5	91.8	91.8	0.77	0.84	0.87	54.2
37	50	250S/M	7.5	358.37	2.7	2.6	1.22377	18/40	413.4	61	980	90.2	92.4	92.5	0.77	0.85	0.87	66.4
45	60	280S/M	6.8	427.86	2.4	2.6	2.29824	24/53	610	66	985	90.5	92.3	92.6	0.68	0.78	0.83	84.5
55	75	280S/M	6.5	534.82	2.3	2.5	2.64298	23/51	655	66	985	91.6	93.2	93.5	0.71	0.82	0.85	100
75	100	315S/M	6.7	713.09	2.3	2.5	3.44737	20/44	775	69	985	91.6	93.5	93.7	0.71	0.81	0.85	136
90	125	315S/M	6.3	891.37	2.1	2.3	3.67719	18/40	818	69	985	92.5	94	93.9	0.71	0.81	0.85	163
110	150	315S/M	6.4	1069.64	2.3	2.4	5.28596	18/40	990	69	985	93.4	94.4	94.5	0.71	0.8	0.84	200
132	175	315S/M*	6.3	1247.91	2.1	2.2	5.28596	13/29	990	69	985	93.5	94.7	94.7	0.72	0.81	0.85	237
132	180	315S/M*	6.3	1283.57	2.1	2.2	5.28596	13/29	990	69	985	93.5	94.7	94.7	0.72	0.81	0.85	237
132	180	355M/L	6.1	1277.08	2	2.3	8.10159	90/198	1385	73	990	92.5	94.7	94.7	0.65	0.75	0.8	251
150	200	355M/L	6.2	1411.85	2	2.1	9.05472	81/178	1460	73	995	92.8	94.9	95.3	0.68	0.76	0.81	280
160	220	355M/L	6.2	1560.88	1.9	2.1	9.53128	72/158	1485	73	990	93	95	95.3	0.67	0.77	0.82	295
185	250	355M/L	6	1773.73	1.9	2.1	10.24613	76/167	1530	73	990	93	94.2	94.8	0.68	0.76	0.81	348
200	270	355M/L	6.3	1915.63	2.1	2.3	12.39067	85/187	1700	73	990	93.5	94.5	94.8	0.7	0.78	0.81	376
220	300	355M/L	6.5	2128.47	2	2.3	13.82036	72/158	1795	73	990	93.4	94.8	95.3	0.67	0.77	0.8	417
250	340	355M/L	6.1	2400.15	2.2	2.2	14.77349	64/141	1830	73	995	94	95.1	95.6	0.7	0.79	0.82	460
260	350	355M/L	6.1	2470.74	2.1	2.1	14.77349	64/141	1830	73	995	94	95.1	95.6	0.7	0.79	0.82	479
280	380	355M/L	6	2696.07	2.1	2.2	14.77349	54/119	1830	73	990	94.3	95.2	95.4	0.68	0.77	0.8	530
300	400	355M/L*	6.4	2837.96	2.1	2.1	14.77349	39/86	1920	73	990	94	95.5	95.6	0.63	0.73	0.79	573
315	430	355M/L*	6	3050.81	1.9	1.9	15.48834	38/84	1950	73	990	94.3	95.8	95.9	0.69	0.78	0.81	585
HIGH-OUTPUT DESIGN																		
3	4	112M	6.3	29.27	2.6	2.6	0.02617	10/22	46	48	960	78.5	81.7	84	0.53	0.65	0.73	7.06
4	5.5	132S	6	40.24	2.1	2.3	0.05039	18/40	65	52	960	83.6	85.5	85.8	0.59	0.7	0.77	8.74
37	50	225S/M	7.5	358.37	2.7	2.6	1.22377	18/40	440	61	980	90.2	92.4	92.5	0.77	0.85	0.87	66.4
45	60	250S/M	8	430.04	2.8	2.8	1.55324	18/40	490	61	980	91	92.3	92.6	0.76	0.84	0.87	79.7
75	100	280S/M	6.7	713.09	2.3	2.5	3.44737	20/44	775	66	985	91.6	93.5	93.7	0.71	0.81	0.85	136
90	125	280S/M	6.3	891.37	2.1	2.3	3.67719	18/40	818	66	985	92.5	94	93.9	0.71	0.81	0.85	163

Notes:
**Class "F" insulation with ΔT105K*
Standard voltage, connection and frequency: 220-240V Δ 50Hz 380-415V Δ 50Hz
380-415V Y 50Hz 660-690V Y 50Hz
The values shown are subject to change without prior notice. To obtain guaranteed values please access our website.

Fan and Exhaust Application Motors Cast Iron Frame - Single Speed Improved Efficiency EFF2

Output		380 V								415 V							
		Rated speed (rpm)	% of full load						Full load current I_n (A)	Rated speed (rpm)	% of full load						Full load current I_n (A)
			Efficiency η			Power Factor (Cos φ)					Efficiency η			Power Factor (Cos φ)			
kW	HP		50	75	100	50	75	100			50	75	100	50	75	100	
VI Pole - 1000 rpm																	
0.12	0.16	900	45	52	55.5	0.49	0.58	0.68	0.483	915	39	48	53	0.43	0.52	0.62	0.508
0.18	0.25	895	49	55.5	57.5	0.49	0.59	0.65	0.732	910	43	52	56.5	0.44	0.52	0.59	0.751
0.25	0.33	890	56	63	65.3	0.44	0.55	0.61	0.954	905	50	58	62.5	0.37	0.46	0.54	1.03
0.37	0.5	920	56	64	66	0.49	0.62	0.72	1.18	935	52	61	64	0.42	0.54	0.64	1.26
0.55	0.75	920	62	65.8	68	0.54	0.67	0.77	1.6	935	58	64	66	0.47	0.59	0.68	1.7
0.75	1	910	71.5	72.8	71.5	0.58	0.71	0.79	2.02	930	68.5	72.4	72.4	0.5	0.64	0.73	1.97
1.1	1.5	915	72	75.5	74.8	0.55	0.69	0.78	2.86	935	70	75.2	75.2	0.46	0.61	0.72	2.83
1.5	2	930	75	77.5	77	0.58	0.7	0.76	3.89	950	73	77.3	77.6	0.5	0.63	0.71	3.79
2.2	3	930	79	80.8	79.7	0.58	0.7	0.76	5.52	950	76	80.3	80.5	0.5	0.63	0.72	5.28
3	4	955	81	83	82	0.61	0.72	0.79	7.04	965	79	82.5	82.6	0.53	0.66	0.74	6.83
4	5.5	955	84.5	85.7	85.4	0.61	0.72	0.79	9.01	965	82.6	85.3	85.9	0.56	0.67	0.75	8.64
5.5	7.5	955	85	86.1	85.6	0.58	0.7	0.77	12.7	965	83	85.5	86	0.5	0.62	0.71	12.5
7.5	10	965	87.5	88.4	87.5	0.66	0.78	0.83	15.7	970	86.5	88	88	0.58	0.71	0.79	15
9.2	12.5	970	87.5	88.2	87.5	0.65	0.76	0.82	19.5	975	85.5	87.8	87.5	0.56	0.71	0.79	18.5
11	15	970	88	88.5	88	0.67	0.78	0.84	22.6	975	86.5	88	88.3	0.58	0.72	0.8	21.7
15	20	960	89	90	89.5	0.82	0.89	0.91	28	970	89	90.5	90.5	0.78	0.87	0.9	25.6
18.5	25	970	90	90.5	89.8	0.76	0.84	0.87	36	980	89.3	90.5	90.5	0.72	0.8	0.84	33.9
22	30	970	89.6	91	91.2	0.74	0.82	0.85	43.1	980	88.4	90.7	91.3	0.66	0.76	0.82	40.9
30	40	980	91	91.8	91.6	0.8	0.86	0.88	56.5	985	90	91.8	92.2	0.73	0.81	0.86	52.6
37	50	980	90.5	92.5	92.4	0.8	0.86	0.88	69.1	985	89.5	92.4	92.6	0.73	0.82	0.86	64.6
45	60	985	91	92.3	92.6	0.72	0.81	0.85	86.9	990	90	92.3	92.7	0.64	0.76	0.82	82.4
55	75	985	92	93.2	93.4	0.74	0.84	0.87	103	990	91.2	93.2	93.6	0.68	0.8	0.84	97.3
75	100	985	92	93.5	93.5	0.74	0.82	0.86	142	990	91.2	93.5	93.8	0.69	0.8	0.84	132
90	125	985	92.8	93.9	93.6	0.74	0.83	0.86	170	990	92.2	93.9	93.9	0.69	0.79	0.84	159
110	150	985	93.6	94.3	94.3	0.74	0.82	0.85	208	985	93.2	94.5	94.6	0.69	0.79	0.83	195
132	175	980	93.7	94.5	94.4	0.75	0.83	0.86	247	985	93.3	94.7	94.7	0.7	0.8	0.84	231
132	180	980	93.7	94.5	94.4	0.75	0.83	0.86	247	985	93.3	94.7	94.7	0.7	0.8	0.84	231
132	180	990	93	94.7	94.5	0.7	0.8	0.82	259	995	92	94.7	94.7	0.6	0.7	0.77	252
150	200	990	93.3	94.9	95.2	0.72	0.79	0.83	288	995	92.3	94.9	95.3	0.64	0.73	0.79	277
160	220	990	93.5	95.2	95.2	0.73	0.8	0.84	304	990	92.5	94.9	95.4	0.63	0.74	0.8	292
185	250	990	93.5	94.4	94.8	0.73	0.8	0.83	357	990	92.5	94	94.8	0.63	0.72	0.79	344
200	270	990	94	94.7	94.8	0.74	0.81	0.83	386	990	93	94.3	94.8	0.66	0.75	0.79	372
220	300	990	93.8	95	95.3	0.72	0.8	0.82	428	995	93	94.6	95.3	0.62	0.74	0.79	407
250	340	995	94.3	95.2	95.5	0.74	0.81	0.83	479	995	93.7	95	95.8	0.67	0.77	0.81	448
260	350	990	94.3	95.2	95.5	0.74	0.81	0.83	498	995	93.7	95	95.8	0.67	0.77	0.81	466
280	380	985	94.7	95.3	95.4	0.73	0.8	0.81	551	990	93.9	95.1	95.3	0.64	0.74	0.79	517
300	400	990	94.7	95.7	95.7	0.68	0.77	0.81	588	995	93.3	95.3	95.5	0.58	0.7	0.77	568
315	430	985	94.8	96	95.8	0.73	0.8	0.82	609	990	93.8	95.6	95.8	0.65	0.76	0.8	572
HIGH-OUTPUT DESIGN																	
3	4	955	80	82	83.9	0.59	0.7	0.76	7.15	965	76.5	81.4	84	0.48	0.6	0.69	7.2
4	5.5	955	84.5	85.7	85.4	0.61	0.72	0.79	9.01	965	82.6	85.3	85.9	0.56	0.67	0.75	8.64
37	50	980	90.5	92.5	92.4	0.8	0.86	0.88	69.1	985	89.5	92.4	92.6	0.73	0.82	0.86	64.6
45	60	980	91.5	92.3	92.5	0.79	0.86	0.88	83	985	90.5	92.3	92.7	0.73	0.82	0.86	77.6
75	100	985	92	93.5	93.5	0.74	0.82	0.86	142	990	91.2	93.5	93.8	0.69	0.8	0.84	132
90	125	985	92.8	93.9	93.6	0.74	0.83	0.86	170	990	92.2	93.9	93.9	0.69	0.79	0.84	159

Fan and Exhaust Application Motors Cast Iron Frame - Single Speed Improved Efficiency EFF2

Output		IEC Frame	Full load torque C_n (Nm)	Locked rotor current I_l/I_n	Locked rotor torque T_l/T_n	Break-down torque T_b/T_n	Inertia J kgm²	Allowable locked rotor time Hot/Cold (s)	Weight (kg)	Sound dB (A)	Rated speed (rpm)	400 V						Full load current I_n (A)
												% of full load						
												Efficiency η			Power Factor (Cos φ)			
kW	HP											50	75	100	50	75	100	
VIII Pole - 750 rpm																		
0.12	0.16	71	1.64	2.5	1.9	2.1	0.00079	44/97	10.7	41	685	36	44.2	47.2	0.4	0.49	0.56	0.655
0.18	0.25	80	2.51	3.1	1.9	2.1	0.00242	16/35	13.7	42	700	40	49	54.2	0.43	0.53	0.62	0.773
0.25	0.33	80	3.41	3	1.8	1.8	0.00294	21/46	14.8	42	680	47.5	55	57	0.45	0.56	0.65	0.974
0.37	0.5	90S	5.05	3.5	2.1	2.1	0.00448	29/64	18	43	695	51	59	61	0.43	0.53	0.64	1.37
0.55	0.75	90L	7.63	3.5	2.1	2.1	0.00616	21/46	21.5	43	690	57	63	65	0.45	0.56	0.65	1.88
0.75	1	100L	9.96	4.2	2	2.1	0.00952	30/66	27	50	705	65	70	71	0.42	0.54	0.63	2.42
1.1	1.5	100L	15.05	4.1	1.7	2.1	0.01289	23/51	30.5	50	700	66	71.5	72.2	0.43	0.56	0.65	3.38
1.5	2	112M	19.79	4.6	2.5	2.7	0.0243	32/70	43	46	710	76.5	77.8	78	0.48	0.6	0.69	4.02
2.2	3	132S	29.47	6.2	2.4	2.7	0.07527	23/51	67.5	48	715	78.5	81.5	82.5	0.53	0.65	0.73	5.27
3	4	132M	39.57	5.8	2.4	2.7	0.08531	22/48	76.5	48	710	78	82.7	83.5	0.52	0.64	0.72	7.2
4	5.5	160M	52.92	5.2	2.2	2.7	0.12209	33/73	105	51	730	81.3	84.3	86	0.47	0.6	0.69	9.73
5.5	7.5	160M	72.16	5.2	2.3	2.7	0.14364	23/51	109.8	51	730	81.5	84.1	85.2	0.46	0.59	0.69	13.5
7.5	10	160L	96.88	4.9	2	2.5	0.16518	15/33	118.1	51	725	83.5	85.7	85.5	0.51	0.63	0.72	17.6
11	15	180L	145.32	6.8	2.3	2.5	0.2758	11/24	153.4	51	725	87	88.5	88.3	0.68	0.79	0.84	21.4
15	20	200L	192.44	4.6	2	2.1	0.3767	23/51	220.4	53	730	86.5	88.6	89	0.56	0.68	0.75	32.4
18.5	25	225S/M	240.55	6.9	2.1	2.8	0.84722	17/37	341	56	730	88.5	90.1	90	0.72	0.8	0.85	34.9
22	30	225S/M	288.66	7.5	2.2	2.7	0.98842	19/42	365	56	730	89	91	91	0.73	0.82	0.85	41.1
30	40	250S/M	384.87	7.9	2.3	2.9	1.22377	17/37	440	56	730	89.5	91.2	91.6	0.7	0.79	0.84	56.3
37	50	280S/M	474.59	6.5	1.9	2.3	2.29824	29/64	590	59	740	90.5	92.2	92.3	0.67	0.77	0.81	71.4
45	60	280S/M	569.51	6.5	2	2.4	2.64298	26/57	643	59	740	90.5	92.1	92.3	0.65	0.75	0.8	88
55	75	315S/M	711.89	6.5	1.9	2.2	3.10263	27/59	745	62	740	91.2	93.1	93	0.69	0.78	0.82	104
75	100	315S/M	949.18	6.6	1.9	2.2	4.36666	20/44	876	62	740	92	93.4	93.5	0.67	0.79	0.82	141
90	125	315S/M	1186.48	6.8	2.1	2.4	5.28596	23/51	970	62	740	92.5	93.8	94.2	0.7	0.78	0.83	166
110	150	355M/L	1423.78	6.4	1.5	2.2	11.9324	41/90	1390	70	740	92.5	94.1	94.5	0.63	0.74	0.8	210
132	175	355M/L	1661.07	6.5	1.6	2.2	13.18845	147/03	1445	70	740	93	94.5	94.8	0.63	0.73	0.79	254
132	180	355M/L	1708.53	6.5	1.6	2.2	13.18845	147/03	1445	70	740	93	94.5	94.8	0.63	0.73	0.79	254
150	200	355M/L	1898.37	6.5	1.6	2.2	14.7585	40/88	1570	70	740	93	94.7	94.7	0.61	0.72	0.78	293
160	220	355M/L	2088.2	6.6	1.6	2.2	16.32856	42/92	1620	70	740	93.3	94.7	94.7	0.64	0.75	0.8	305
185	250	355M/L	2372.96	6.5	1.6	2.2	17.27059	30/66	1730	70	740	93	94.6	95.1	0.6	0.71	0.78	360
200	270	355M/L	2562.8	6.8	1.6	2.1	19.46866	37/81	1830	70	740	93.3	94.6	95.2	0.6	0.72	0.79	384
220	300	355M/L*	2847.55	6.5	1.6	2.1	20.4107	35/77	1930	70	740	93.4	94.7	95.2	0.62	0.73	0.78	428
HIGH-OUTPUT DESIGN																		
7.5	10	160M	96.88	4.9	2	2.5	0.16518	15/33	127	51	725	83.5	85.7	85.5	0.51	0.63	0.72	17.6
30	40	225S/M	384.87	7.9	2.3	2.9	1.22377	17/37	440	56	730	89.5	91.2	91.6	0.7	0.79	0.84	56.3
37	50	250S/M	481.09	8.2	2.3	2.8	1.55324	13/29	455	56	730	89	91.5	91.5	0.68	0.78	0.84	69.5
55	75	280S/M	711.89	6.5	1.9	2.2	3.10263	27/59	745	59	740	91.2	93.1	93	0.69	0.78	0.82	104
75	100	280S/M	949.18	6.6	1.9	2.2	4.36666	20/44	876	59	740	92	93.4	93.5	0.67	0.79	0.82	141
110	150	315S/M*	1423.78	7	1.9	2.2	5.6307	14/31	970	62	740	92.5	94.1	94.8	0.61	0.73	0.79	212

Notes:
**Class "F" insulation with ΔT105K*
Standard voltage, connection and frequency: 220-240V Δ 50Hz
380-415V Y 50Hz
380-415V Δ 50Hz
660-690V Y 50Hz
The values shown are subject to change without prior notice. To obtain guaranteed values please access our website.

Fan and Exhaust Application Motors Cast Iron Frame - Single Speed Improved Efficiency EFF2

Output		380 V								415 V							
		Rated speed (rpm)	% of full load						Full load current I_n (A)	Rated speed (rpm)	% of full load						Full load current I_n (A)
			Efficiency η			Power Factor (Cos φ)					Efficiency η			Power Factor (Cos φ)			
kW	HP		50	75	100	50	75	100			50	75	100	50	75	100	
VIII Pole - 750 rpm																	
0.12	0.16	675	40	48	50	0.44	0.52	0.6	0.608	695	32	40.5	45	0.37	0.47	0.53	0.7
0.18	0.25	690	43	52	54.5	0.45	0.56	0.65	0.772	710	37	46	53	0.41	0.5	0.59	0.801
0.25	0.33	670	50.5	56.5	56.5	0.48	0.59	0.69	0.974	690	45	53.5	56.5	0.42	0.53	0.61	1.01
0.37	0.5	685	54	61	62	0.46	0.56	0.67	1.35	700	48	57	60	0.4	0.5	0.6	1.43
0.55	0.75	680	59	64.5	65.5	0.48	0.59	0.69	1.85	700	55	61.5	64.5	0.41	0.52	0.61	1.94
0.75	1	695	67	71	70.5	0.46	0.58	0.66	2.45	710	63	69	70.5	0.38	0.5	0.6	2.47
1.1	1.5	690	68	72	72	0.47	0.6	0.68	3.41	710	64	70.5	72.2	0.4	0.52	0.62	3.42
1.5	2	700	77.5	78	77.7	0.52	0.63	0.7	4.19	715	74.5	77	78.1	0.46	0.58	0.66	4.05
2.2	3	710	79.5	81.8	82.1	0.56	0.68	0.75	5.43	720	77.5	81.2	82.6	0.5	0.62	0.71	5.22
3	4	705	79.5	83	83	0.54	0.66	0.74	7.42	715	76.5	82.4	83.5	0.5	0.62	0.7	7.14
4	5.5	725	82.6	84.8	85.9	0.51	0.64	0.72	9.83	730	80	83.7	86	0.44	0.57	0.66	9.8
5.5	7.5	725	82.5	84.7	85.2	0.5	0.63	0.72	13.6	730	80.5	83.5	85	0.42	0.55	0.66	13.6
7.5	10	720	84.5	86	85.3	0.54	0.66	0.74	18.1	730	82.5	85.5	85.5	0.48	0.6	0.7	17.4
11	15	720	87.5	88.3	87.8	0.71	0.81	0.85	22.4	730	86.5	88.6	88.5	0.65	0.77	0.83	20.8
15	20	725	87.5	88.9	88.9	0.61	0.72	0.77	33.3	730	85.5	88.3	88.9	0.5	0.64	0.72	32.6
18.5	25	730	88.8	90	89.8	0.75	0.83	0.86	36.4	735	88.2	90.3	90.2	0.68	0.78	0.84	34
22	30	730	89.4	90.9	90.5	0.76	0.84	0.86	42.9	735	88.6	91	91.2	0.71	0.8	0.84	40
30	40	730	90	91.3	91.3	0.73	0.81	0.85	58.7	735	89	91.1	91.8	0.66	0.77	0.83	54.8
37	50	735	91	92.2	92.1	0.7	0.79	0.82	74.4	740	90	92.2	92.4	0.64	0.75	0.79	70.5
45	60	735	91	92.2	92	0.7	0.77	0.82	90.6	740	90	92	92.3	0.6	0.72	0.78	87
55	75	735	91.6	93.2	92.8	0.72	0.8	0.83	108	740	90.7	93	93	0.65	0.76	0.8	103
75	100	735	92.4	93.3	93.3	0.7	0.8	0.83	147	740	91.6	93.4	93.4	0.64	0.78	0.81	138
90	125	735	92.9	93.9	94	0.73	0.81	0.84	173	740	92.1	93.7	94.2	0.67	0.75	0.81	164
110	150	740	93	94.2	94.5	0.66	0.77	0.82	216	745	92	94.1	94.5	0.6	0.71	0.78	208
132	175	740	93.5	94.6	94.8	0.66	0.75	0.81	261	745	92.5	94.4	94.8	0.6	0.71	0.77	252
132	180	740	93.5	94.6	94.8	0.66	0.75	0.81	261	745	92.5	94.4	94.8	0.6	0.71	0.77	252
150	200	740	93.5	94.8	94.7	0.66	0.76	0.8	301	745	92.5	94.7	94.7	0.57	0.69	0.76	290
160	220	740	93.8	94.8	94.8	0.68	0.77	0.81	317	745	92.8	94.7	94.7	0.6	0.72	0.79	298
185	250	740	93.5	94.7	95.1	0.65	0.75	0.8	369	745	92.5	94.5	95	0.55	0.67	0.76	356
200	270	740	93.8	94.8	95.1	0.65	0.75	0.81	394	745	92.8	94.4	95.2	0.56	0.69	0.77	380
220	300	740	93.8	94.8	95.2	0.66	0.76	0.8	439	745	93	94.6	95.2	0.58	0.7	0.76	423
HIGH-OUTPUT DESIGN																	
7.5	10	720	84.5	86	85.3	0.54	0.66	0.74	18.1	730	82.5	85.5	85.5	0.48	0.6	0.7	17.4
30	40	730	90	91.3	91.3	0.73	0.81	0.85	58.7	735	89	91.1	91.8	0.66	0.77	0.83	54.8
37	50	730	89.5	91.5	91	0.72	0.82	0.86	71.8	735	88.5	91.5	91.5	0.64	0.76	0.82	68.6
55	75	735	91.6	93.2	92.8	0.72	0.8	0.83	108	740	90.7	93	93	0.65	0.76	0.8	103
75	100	735	92.4	93.3	93.3	0.7	0.8	0.83	147	740	91.6	93.4	93.4	0.64	0.78	0.81	138
110	150	735	93	94.1	94.8	0.66	0.75	0.8	220	740	92	94.1	94.8	0.56	0.71	0.77	210

Fan and Exhaust Application Motors Cast Iron Frame - Two Speed Improved Efficiency EFF2 - Variable torque IV/II Pole - Dahlander Winding

Output		IEC Frame	Full load torque C_n (Nm)	Locked rotor current I_l/I_n	Locked rotor torque T_l/T_n	Break-down torque T_b/T_n	Inertia J kgm²	Allowable locked rotor time Hot/Cold (s)	Weight (kg)	Sound dB (A)	Rated speed (rpm)	400 V						Full load current I_n (A)
												% of full load						
												Efficiency η			Power Factor (Cos φ)			
kW	HP											50	75	100	50	75	100	
50Hz - 400V - IV/II pole (1500/3000 rpm) - Y / YY connection																		
0.11	0.15	71	0.75	4	2.3	3	0.00079	40/88	11	43	1410	51	59	62	0.45	0.56	0.65	0.394
0.55	0.75		1.86	5.5	2.3	2.8		8/18		56	2830	66	70	71	0.67	0.8	0.86	1.3
0.11	0.15	80	0.75	3.9	2.1	2.7	0.00068	60/132	13	44	1400	57	63.5	65	0.42	0.53	0.62	0.394
0.55	0.75		1.88	5.2	2.2	3		12/26		59	2800	70	72	72	0.69	0.8	0.86	1.282
0.2	0.27	80	1.35	4.5	2	2.5	0.00242	30/66	14	44	1400	64	68	68.5	0.48	0.61	0.7	0.602
0.8	1.08		2.69	6	2.5	3.2		8/18		59	2820	70	72	73	0.66	0.77	0.83	1.91
0.25	0.33	80	1.67	3.8	2.2	2.5	0.00294	30/66	15	44	1390	66	70	70.5	0.48	0.6	0.68	0.753
1.1	1.5		3.75	6	2.5	2.8		8/18		59	2810	74	75	75	0.71	0.83	0.88	2.41
0.37	0.5	90S	2.45	4.5	2	2.1	0.00476	18/40	20	49	1435	62.3	67.4	68.8	0.45	0.54	0.62	1.25
1.5	2		4.84	6.5	2.5	3		6/13		64	2900	68	75	76.4	0.62	0.73	0.8	3.54
0.5	0.68	90L	3.36	3.5	1.8	2.2	0.00616	13/29	22	49	1420	67	70	71	0.47	0.58	0.66	1.54
2.2	3		7.41	6	2.2	2.6		6/13		64	2845	75	77.8	78.9	0.71	0.8	0.87	4.63
0.65	0.88	100L	4.31	4.5	2.1	2.2	0.00765	22/48	30	53	1435	72	76.5	77.5	0.56	0.67	0.73	1.66
2.5	3.4		8.26	6.5	2.3	2.8		6/13		67	2890	78	80	81	0.7	0.81	0.86	5.18
0.8	1.08	100L	5.3	4.6	2.1	2.2	0.00918	18/40	33	53	1430	75	77	77.5	0.57	0.68	0.75	1.99
3.1	4.2		10.21	7.2	2.3	2.8		6/13		67	2890	80	81.5	82	0.73	0.83	0.88	6.2
1.1	1.5	112M	7.32	5	1.8	2.6	0.01741	22/48	43	56	1440	74	78.5	79	0.55	0.66	0.72	2.79
4.4	5.9		14.34	7.8	2.4	3		7/15		64	2890	82.5	83.5	84	0.76	0.84	0.88	8.59
1.5	2	132S	9.62	5.6	2	2.4	0.0243	38/84	58	60	1460	77	81.5	83	0.5	0.62	0.71	3.67
6	8		19.18	8.3	2.5	3		6/13		68	2930	83.5	85	85	0.73	0.84	0.89	11.4
2	2.7	132M	12.9	5.8	1.9	2	0.02804	38/84	67	60	1470	80	82	83	0.51	0.63	0.72	4.83
8	10.8		25.89	8.5	2.6	2.7		6/13		68	2930	82.8	84	85	0.77	0.85	0.89	15.3
3	4	160M	19.11	6	2	2.4	0.05294	28/62	118	67	1470	80	83	84	0.5	0.63	0.71	7.26
12	16		38.1	8.5	2.5	2.9		6/13		70	2950	83	85	86	0.71	0.81	0.87	23.1
4	5.5	160L	26.28	6	2.2	2.4	0.06766	30/66	135	67	1470	83.5	84.5	85	0.5	0.63	0.71	9.57
16	21.7		51.67	8.6	2.6	3		6/13		70	2950	85	86.5	87	0.73	0.82	0.87	30.5
5.5	7.5	180L	35.96	4.7	1.6	2.7	0.11352	40/88	160	64	1465	84.5	87	87	0.54	0.65	0.72	12.7
20	27.2		64.65	9.2	2.7	3.5		6/13		70	2955	87.5	89.5	90	0.76	0.84	0.89	36
6.3	8.6	180L	41.23	4.7	1.6	2.4	0.21527	35/77	180	64	1465	86.5	88	88.5	0.54	0.65	0.72	14.3
25	34		80.95	8.9	2.7	3.4		6/13		70	2950	90	90.7	91	0.76	0.85	0.89	44.6
8.5	11.5	200L	54.95	4.2	2	2	0.22426	50/110	242	69	1470	88.5	89.5	90	0.58	0.69	0.74	18.4
33	44.8		106.31	8.2	3.2	2.8		10/22		74	2960	89.5	91	91.2	0.8	0.87	0.89	58.7
9	12.2	225S/M	57.71	6.1	2.3	2.6	0.39467	28/62	366	70	1485	85	88	88.5	0.55	0.65	0.72	20.4
37	50		118.25	8.7	2.6	3		6/13		82	2970	88.5	90	90.5	0.81	0.87	0.9	65.6
12	16.3	225S/M	77.88	6.3	2.2	2.4	0.76985	23/51	385	70	1470	86	87	88.2	0.57	0.67	0.73	26.9
46	63		149.5	8.8	2.4	2.8		6/13		82	2960	85	88	90.6	0.76	0.84	0.9	81.4
15	20	250S/M	94.92	5.2	1.9	2.2	1.08479	32/70	450	70	1480	88.5	89.7	90.5	0.64	0.73	0.76	31.5
55	75		177.37	8.5	2.3	2.7		6/13		82	2970	89.8	90.8	91	0.85	0.89	0.91	95.9
20	27	280S/M	129.01	5.5	2	2.1	2.16799	60/132	705	76	1470	89.3	91	91.8	0.56	0.66	0.72	43.7
75	100		236.5	8.8	2.5	2.7		7/15		83	2970	89.5	91.2	92	0.72	0.8	0.84	140
24	32.6	280S/M	154.2	5.5	2	2.1	2.40888	55/121	775	76	1485	89.2	90.9	91.8	0.56	0.66	0.72	52.4
90	125		294.63	9	2.5	3.3		11/24		83	2980	89.8	91.4	92.3	0.78	0.85	0.88	160
27	37	315S/M	176.79	5.4	2	2	3.21184	62/136	820	77	1470	89.3	91	92	0.57	0.67	0.72	58.8
110	150		354.75	9	2.6	2.7		7/15		84	2970	90	91.9	92.8	0.73	0.82	0.85	201
33	45	315S/M	215.02	6	2	2.1	3.61332	50/110	865	77	1470	89.4	91.2	92.5	0.57	0.67	0.71	72.5
132	180		424.98	9.3	2.5	2.8		6/13		84	2975	90.3	92.4	93.3	0.75	0.82	0.86	237
37	50	315S/M*	238.91	6	2	2.2	3.61332	48/106	1017	77	1470	91.8	92.4	93	0.57	0.67	0.71	80.9
145	197		465.12	9.3	2.3	2.7		6/13		84	2975	91.5	93	94	0.75	0.82	0.86	259

Notes:
**Class "F" insulation with ΔT105K*
Standard voltage, connection and frequency: 220-240V Δ 50Hz
380-415V Y 50Hz
380-415V Δ 50Hz
660-690V Y 50Hz
The values shown are subject to change without prior notice. To obtain guaranteed values please access our website.

Fan and Exhaust Application Motors Cast Iron Frame - Two Speed Improved Efficiency EFF2 - Variable torque VIII/IV Pole - Dahlander Winding

Output		IEC Frame	Full load torque C_n (Nm)	Locked rotor current I_l/I_n	Locked rotor torque T_l/T_n	Break-down torque T_b/T_n	Inertia J kgm²	Allowable locked rotor time Hot/Cold (s)	Weight (kg)	Sound dB (A)	Rated speed (rpm)	400 V						Full load current I_n (A)
												% of full load						
												Efficiency η			Power Factor (Cos φ)			
kW	HP											50	75	100	50	75	100	
50Hz - 400V - VIII/IV pole (750/1500 rpm) - Y / YY connection																		
0.15	0.2	80	1.98	3.1	2.3	2.5	0.00294	20/44	14.8	42	710	31	39	46	0.47	0.54	0.62	0.759
0.6	0.8		3.9	5.5	2.2	2.7		6/13		44	1440	57	65	68.5	0.51	0.64	0.72	1.76
0.2	0.27	80	2.75	2.7	1.7	2	0.00294	18/40	15.3	42	690	37	45	49.5	0.5	0.6	0.66	0.884
0.8	1.08		5.36	4.7	1.7	2.1		6/13		44	1415	64	69	70	0.59	0.73	0.83	1.99
0.3	0.4	90S	3.99	3.1	2.2	2.2	0.0056	28/62	22.2	43	705	46	54	57	0.42	0.5	0.59	1.29
1.2	1.6		7.86	5.5	2.3	2.7		6/13		49	1430	72	75	76	0.55	0.69	0.78	2.92
0.4	0.55	90L	5.52	3.2	2.2	2.3	0.00672	17/37	23	43	700	49	56	59	0.4	0.5	0.58	1.69
1.6	2.17		10.73	5.7	2.3	2.6		6/13		49	1420	73	76	77	0.57	0.7	0.79	3.8
0.55	0.75	100L	7.53	3.5	2.3	2.5	0.01345	20/44	31	50	700	55	63	65	0.4	0.52	0.61	2
2.2	3		14.74	6.9	2.5	2.8		6/13		53	1430	77	79	80	0.62	0.75	0.82	4.84
0.7	0.95	100L	9.67	3.6	2.2	2.4	0.01457	20/44	32.3	50	690	58	64.5	66.5	0.42	0.53	0.63	2.41
2.8	3.8		18.93	6	2.4	2.6		6/13		53	1410	77.5	80	80	0.64	0.77	0.84	6.01
1	1.4	112M	13.85	4	2	2.1	0.02617	18/40	43	46	710	70	73	74	0.5	0.64	0.71	2.75
3.8	5.2		25.36	7	2.6	2.8		6/13		56	1440	76	78.5	80	0.62	0.76	0.83	8.26
1.3	1.77	132S	17.03	6.2	2.1	2.8	0.07527	20/44	67.5	48	730	72	75	76.5	0.48	0.61	0.7	3.5
5	6.8		33.17	8.5	2.7	2.8		6/13		60	1440	77	79	80	0.71	0.82	0.87	10.4
1.8	2.45	132M*	23.74	4.2	1.5	2.4	0.08531	21/46	62	48	725	74	78	79	0.43	0.56	0.65	5.06
7.2	9.8		46.83	7.9	2.2	2.7		5/11		60	1470	77	80.5	81.5	0.53	0.67	0.77	16.5
1.8	2.45	160M	23.57	5.2	2.1	2.8	0.12208	30/66	110	51	730	75.8	80	81.2	0.46	0.58	0.67	4.776
7.2	9.8		46.83	8.5	2.5	3.6		7/15		67	1470	82	85	85.8	0.65	0.77	0.84	14.419
3	4	160M	38.75	4.3	1.7	2.1	0.14364	30/66	107.4	51	725	81	82	82.5	0.54	0.67	0.75	7
11	15		72.41	7	2.4	2.7		6/13		67	1455	84	85.5	86	0.71	0.83	0.88	21
3.5	4.8	160L	46.5	4.2	1.9	2.2	0.18673	30/66	135	51	725	81	83	83	0.51	0.64	0.72	8.45
14	19		91.72	7.2	2.6	2.9		6/13		67	1455	84	86	86.5	0.71	0.83	0.88	26.5
4.3	5.8	180L	55.81	4	1.7	2	0.19734	20/44	162	51	730	80	83	84.2	0.39	0.5	0.58	12.7
17	23		109.53	8	2.4	2.8		7/15		64	1475	88.6	89.5	89.5	0.62	0.75	0.82	33.4
5	6.8	180L	65.43	5.1	2	2	0.33095	20/44	177	51	730	79	82.7	82.7	0.4	0.54	0.62	14.1
20	27		129.01	8.8	2.5	2.6		7/15		64	1470	85	88	89	0.65	0.77	0.84	38.6
6.5	8.8	200L	84.1	3.6	1.9	2	0.38609	20/44	255.2	53	735	83.5	86.5	87	0.43	0.54	0.6	18
28	38		180.34	7.4	2.6	2.8		8/18		69	1480	90.5	91.5	91.5	0.71	0.81	0.85	52
8	10.8	200L*	103.92	4	1.8	2	0.4137	20/44	255	53	730	82.5	86	87	0.41	0.53	0.61	21.8
35	47		224.58	7.8	2.4	2.8		6/13		69	1470	89	90	90.5	0.66	0.78	0.83	67.3
9.2	12.5	225S/M	118.65	5.5	2.8	3.1	0.75686	18/40	360	56	740	81	85	87	0.43	0.53	0.6	25.4
37	50		236.5	9.5	3.1	4.2		6/13		70	1485	86.5	89	90	0.62	0.74	0.8	74.2
11	15	225S/M	142.38	5	2.2	2.2	1.12963	20/44	425	56	740	83	86	87	0.47	0.58	0.67	27.2
44	59.7		283.33	8	2.4	3		8/18		70	1480	89	90.5	91	0.73	0.83	0.87	80.2
14.7	19.9	250S/M	190.17	4.6	1.8	2	1.55324	18/40	450	56	735	86	87.5	88	0.45	0.58	0.66	36.5
55	75		355.94	9	2.6	3		6/13		70	1480	89	90.5	91	0.71	0.82	0.87	100
17	23	280S/M	218.31	4.2	1.5	1.6	3.33245	20/44	650	59	740	83.2	86.4	88.6	0.47	0.57	0.63	44
68	92.3		436.57	8	2.5	2.5		10/22		76	1485	85.1	89	90	0.76	0.83	0.86	127
20	27	280S/M	256.28	4.2	1.6	1.6	3.67719	20/44	690	59	740	83.9	87.3	89	0.46	0.57	0.61	53.2
80	109		515.56	8.6	2.7	2.8		10/22		76	1485	86.5	89	90.3	0.76	0.81	0.84	152
27	37	315S/M	351.2	4	1.7	1.7	4.82631	40/88	890	62	740	85	87	88.5	0.4	0.5	0.58	76
110	150		709.49	8.5	2.6	2.7		10/22		77	1485	88	90.2	91.3	0.69	0.78	0.82	212
33	44.8	315S/M	425.23	4	1.7	1.8	5.40087	20/44	990	62	740	83.5	87.8	89.4	0.4	0.51	0.58	91.9
130	177		837.2	8.4	2.6	2.7		10/22		77	1485	87.3	90	91.3	0.65	0.76	0.82	251
40	55	315S/M*	522.05	4	1.9	1.9	5.40087	30/66	1000	62	740	89.2	91	91.3	0.43	0.55	0.59	107
160	217		1026.4	8.6	2.8	2.9		8/18		77	1485	92	93	94	0.67	0.79	0.84	292

Fan and Exhaust Application Motors Cast Iron Frame - Two Speed
Improved Efficiency EFF2 - Variable torque VI/IV Pole - Independent Winding

Output		IEC Frame	Full load torque C_n (Nm)	Locked rotor current I_r/I_n	Locked rotor torque T_r/T_n	Break-down torque T_b/T_n	Inertia J kgm²	Allowable locked rotor time Hot/Cold (s)	Weight (kg)	Sound dB (A)	Rated speed (rpm)	400 V						Full load current I_n (A)
												% of full load						
												Efficiency η			Power Factor (Cos φ)			
kW	HP											50	75	100	50	75	100	
50Hz - 400V - VI/IV pole (1000/1500 rpm) - Y / Y connection																		
0.1	0.14	71	3.5	1.02	3	3.2	0.00096	21/46	8	43	960	26	34	40	0.4	0.45	0.5	0.722
0.3	0.4		5	1.96	2.3	3		11/24		43	1435	54	62	66.3	0.47	0.58	0.66	0.99
0.2	0.27	80	3.7	1.96	1.9	2.7	0.00328	9/20	11	43	970	31	40	46	0.44	0.52	0.6	1.05
0.55	0.75		5	3.63	1.9	2.7		6/13		44	1450	52	60	65.7	0.48	0.61	0.69	1.75
0.25	0.33	80	3.9	2.39	2.5	3.4	0.00346	7/15	12	43	970	33	41.5	48	0.42	0.5	0.57	1.32
0.75	1		4.7	4.91	1.4	2.1		6/13		44	1430	62	67	68	0.57	0.71	0.82	1.94
0.3	0.4	90S	5.1	2.9	2.6	3.2	0.0056	9/20	16	45	970	38	48	53	0.39	0.46	0.54	1.51
1.1	1.5		5.4	7.32	2	2.6		6/13		49	1440	65	71	72.5	0.51	0.65	0.75	2.92
0.37	0.5	90L	4.5	3.62	2	2.6	0.00672	8/18	20	45	970	40	50	55	0.43	0.52	0.6	1.62
1.5	2		5.5	9.76	2	2.4		6/13		49	1440	70	74	75	0.55	0.69	0.79	3.65
0.6	0.82	100L	5	5.94	2.2	3.1	0.01345	9/20	25	44	970	51	59	63	0.41	0.5	0.59	2.33
1.7	2.3		6.5	11.14	2.1	2.7		6/13		53	1450	68	73	75	0.52	0.65	0.74	4.42
0.7	0.95	100L	5.5	6.88	2.8	3.5	0.01	10/22	27	44	970	57	64	68	0.4	0.5	0.6	2.48
2.2	3		6	14.74	1.7	2.2		6/13		53	1430	76	77	77	0.64	0.77	0.84	4.91
1	1.36	112M	6.2	9.7	3	3.5	0.02617	7/15	44.6	48	985	54	63	68	0.37	0.46	0.55	3.86
3	4		7.6	19.24	2.6	3		6/13		56	1460	76	80	81	0.58	0.7	0.78	6.85
1.5	2	132S	7	14.19	3	3.8	0.05071	8/18	63.7	52	990	64	71	76	0.35	0.45	0.53	5.38
4.5	6		7.5	28.77	2.8	3.1		8/18		60	1465	76	80	82	0.58	0.7	0.78	10.2
2.2	3	132M	7.4	21.28	2.8	3.2	0.06242	7/15	79	52	990	72	78	80	0.37	0.48	0.57	6.96
6	8.1		7.8	38.84	2.5	3.1		6/13		60	1465	75	80	82	0.57	0.7	0.78	13.7
2.5	3.4	160M	7	24.37	2.5	3.6	0.11491	12/26	96	56	980	74.5	79	81	0.49	0.64	0.74	6.02
5.5	7.5		7.5	35.72	2	3.3		6/13		67	1475	75.5	80	81.5	0.6	0.74	0.83	11.7
3.3	4.5	160M	4	32.42	2	2.3	0.1061	18/40	113.8	56	975	75.5	78.5	79	0.48	0.61	0.69	8.74
10	13.6		7	64.76	3	3.2		7/15		67	1475	83	86	87	0.56	0.69	0.76	22
3.5	4.8	160M	6.6	34.4	2.3	3.2	0.14364	9/20	118	56	980	77	81	82	0.53	0.68	0.78	7.9
7.5	10		8	47.62	2.2	3.5		6/13		67	1475	78	82	83.5	0.6	0.75	0.83	15.6
4.5	6	160L	4.5	43.22	1.9	2	0.13131	8/18	135	56	975	77	79	79	0.56	0.68	0.75	11
14	19		7	90.79	3	3		8/18		67	1470	84.5	87	88	0.66	0.77	0.82	28
5	6.8	180L	8	48.49	2.2	2.7	0.27579	6/13	163	56	985	85	86	86	0.73	0.83	0.87	9.65
11	15		10	71.67	2.6	3.3		5/11		64	1470	86.5	88	88.5	0.85	0.9	0.92	19.5
6.5	8.8	180L	7.8	62.75	180	2.9	0.33308	5/11	195	56	985	85	86	86.3	0.7	0.81	0.87	12.5
16	21.7		9	103.34	2.4	2.9		5/11		64	1475	88	88.5	88.5	0.81	0.89	0.92	28.4
8.5	11.5	180L	8.7	82.01	2.2	3.2	0.37922	5/11	230	56	985	86.5	87.5	87.5	0.68	0.8	0.86	16.3
20	27.2		9	130.41	2.4	3		5/11		64	1465	88.5	89	89	0.86	0.91	0.93	34.9
9	12.2	200L	7.5	86.56	2.3	3.2	0.5055	5/11	280	58	990	84.5	87.5	88.5	0.58	0.7	0.79	18.6
26	35.5		7.5	168.48	2.5	3.1		8/18		69	1480	88.5	90.5	90.5	0.74	0.83	0.87	47.7
12	16	225S/M	8.3	113.52	3.5	3.5	0.77479	9/20	379	61	990	82	85.5	87	0.5	0.62	0.71	28
34	46.2		8.5	218.52	2.5	3.2		6/13		70	1485	87	89	89	0.72	0.82	0.87	63.4
14	19	225S/M	7.3	134.8	2.5	2.5	0.84523	8/18	433	61	990	84	85.5	87	0.57	0.7	0.77	30.2
40	55		9	260.15	2.9	3.5		5/11		70	1485	88.5	90.5	91	0.71	0.81	0.87	72.9
18	24.4	225S/M	5.7	173.99	1.7	2.5	1.3179	8/18	448	61	985	86.9	87.9	87.4	0.64	0.76	0.8	37.2
50	68		8.7	321.64	2.3	3.6		8/18		70	1485	89	91	91.6	0.65	0.77	0.83	94.9
18	24.4	250S/M	8.1	173.12	3.3	3.6	1.16219	9/20	520	61	990	86	88	89	0.51	0.65	0.73	40
50	68		8.6	321.64	2.6	3.4		5/11		70	1485	90	91.5	92	0.73	0.83	0.87	90.2
25	34	280S/M	8	240.01	3.6	3.2	2.58594	11/24	685	66	995	84	87.5	89	0.5	0.61	0.69	58.8
70	95		7.5	447.84	2.3	2.8		20/44		76	1490	90.5	92	93	0.72	0.82	0.87	125
28	38	280S/M	7.1	269.61	3.1	2.7	2.82838	24/53	748	66	990	86	89	90.5	0.55	0.66	0.73	61.2
80	109		9	513.83	2.7	3.4		12/26		76	1490	89	91.5	92.6	0.71	0.8	0.85	147
34	46	315S/M	8.8	324.73	3.7	3.4	3.39405	8/18	898	69	995	85	88	90	0.49	0.61	0.69	79
95	129		8.1	610.16	2.9	2.9		15/33		77	1485	91	92.7	93.5	0.79	0.85	0.88	167
40	54.3	315S/M	7	385.25	2.7	3.3	3.7981	6/13	1005	69	990	88.5	90.5	91	0.5	0.62	0.7	90.6
115	156		9	735.39	2.6	3.8		9/20		77	1490	91.4	93.2	93.9	0.62	0.73	0.8	221
45	60	315S/M	6.5	425.69	2.7	2.5	3.7981	8/18	1005	69	990	90	91	91.5	0.6	0.71	0.77	92.2
125	170		9	801.39	2.9	3.5		13/29		77	1490	93	94	94.5	0.7	0.8	0.83	230
55	75	315S/M	7.2	532.12	3.2	2.9	3.7981	5/11	1005	69	990	90	91	91.6	0.56	0.68	0.75	116
145	197		8	931.8	2.5	3		9/20		77	1485	93.5	94.5	94.5	0.73	0.83	0.84	264

Notes:
**Class "F" insulation with ΔT105K*
Standard voltage, connection and frequency: 220-240V Δ 50Hz *380-415V Δ 50Hz*
380-415V Y 50Hz *660-690V Y 50Hz*
The values shown are subject to change without prior notice. To obtain guaranteed values please access our website.

Fan and Exhaust Application Motors Cast Iron Frame - Two Speed Improved Efficiency EFF2 - Constant torque IV/II Pole - Dahlander Winding

Output		IEC Frame	Full load torque C_n (Nm)	Locked rotor current I_l/I_n	Locked rotor torque T_l/T_n	Break-down torque T_b/T_n	Inertia J kgm²	Allowable locked rotor time Hot/Cold (s)	Weight (kg)	Sound dB (A)	Rated speed (rpm)	400 V						Full load current I_n (A)
												% of full load						
												Efficiency η			Power Factor (Cos φ)			
kW	HP											50	75	100	50	75	100	
50Hz - 400V - IV/II pole (1500/3000 rpm) - Δ / YY connection																		
0.21	0.28	71	1.39	5	2.5	2.7	0.00079	28/62	11	43	1420	56	63	65	0.48	0.57	0.66	0.707
0.28	0.38		0.93	6.5	2.5	3		12/26		56	2870	54	62	66	0.73	0.8	0.84	0.729
0.3	0.4	71	1.97	5.1	2.5	2.8	0.00096	25/55	12.5	43	1425	60	67	69	0.47	0.58	0.68	0.923
0.43	0.58		1.42	6.5	2.6	3		14/31		56	2870	60.5	67.5	70	0.72	0.79	0.84	1.06
0.48	0.65	80	3.31	4	2.3	2.3	0.00079	20/44	14	44	1380	61	67	68.1	0.5	0.62	0.72	1.41
0.6	0.82		2.04	6.1	2.5	2.8		12/26		59	2830	69	72	73	0.72	0.82	0.87	1.36
0.7	0.95	80	4.91	4	2.2	2.2	0.00096	18/40	15	44	1360	65	68	68.4	0.5	0.62	0.71	2.08
0.85	1.15		2.86	6.2	2.5	2.8		10/22		59	2820	72	75.5	76.5	0.73	0.82	0.88	1.82
1.1	1.5	90S	7.53	5	2.1	2.2	0.00504	7/15	20	49	1400	71	73.5	74	0.66	0.78	0.84	2.55
1.4	1.9		4.85	6	2.2	2.2		6/13		64	2750	68	72	73	0.7	0.81	0.9	3.08
1.5	2	90L	9.96	5.2	2.3	2.4	0.00616	8/18	22	49	1410	73	75.3	76	0.61	0.76	0.83	3.43
1.9	2.6		6.5	5.5	2.3	2.5		6/13		64	2810	68	72	72.5	0.74	0.84	0.9	4.2
2	2.7	100L	13.45	6	2.4	2.4	0.00918	12/26	34	53	1410	72.4	75.5	76.2	0.62	0.74	0.83	4.56
2.4	3.3		8.08	6.7	2.4	2.5		8/18		67	2870	72	74	76	0.75	0.85	0.89	5.12
2.6	3.5	100L	17.44	5.5	2.4	2.5	0.00918	8/18	34	53	1410	74	77.3	78	0.62	0.74	0.83	5.8
3.1	4.2		10.28	6.8	2.5	2.8		6/13		67	2870	74	77	77.5	0.67	0.8	0.87	6.64
3.7	5	112M	24.56	6	2.3	2.3	0.01607	8/18	45	56	1430	79.5	80	80	0.68	0.8	0.86	7.76
4.4	5.9		14.36	7.3	2.4	2.7		6/13		64	2885	79	80	80.5	0.77	0.86	0.91	8.67
4.9	6.6	132S	31.97	6.5	1.7	2	0.04264	8/18	62	60	1450	82	83	83	0.78	0.86	0.89	9.57
5.9	7.9		19.2	6.5	2	2.3		6/13		68	2890	77.5	78.5	79	0.82	0.89	0.92	11.7
6.8	9.2	132M	44.57	6.4	1.6	2	0.05427	7/15	68	60	1450	83	84	84	0.75	0.84	0.88	13.3
8	11		26.55	6.5	2	2.3		6/13		68	2910	79	81	82	0.75	0.87	0.91	15.5
9.5	12.9	160M	62.49	5	2	2.1	0.09535	20/44	110	67	1450	83.5	84.2	85	0.77	0.84	0.86	18.8
11	15		35.84	8	2.8	2.8		10/22		70	2940	80	82.1	83	0.78	0.86	0.87	22
12	16.3	160L*	78.96	5	1.9	2	0.11542	20/44	126	67	1450	83.9	85.5	86	0.78	0.85	0.87	23.1
15	20		48.27	7	2.1	2.6		8/18		70	2910	82.5	85	85.4	0.85	0.9	0.92	27.6
15	20	180L	96.22	6.3	2.2	2.3	0.19733	17/37	170	64	1460	86.5	87.7	88	0.72	0.81	0.86	28.6
18	24.5		58.33	7.5	2.3	2.8		10/22		70	2950	86.5	87.5	88	0.84	0.89	0.92	32.1
18	24.5	180L	117.47	6.7	2.2	2.4	0.22424	15/33	190	64	1465	87.5	88.7	89	0.71	0.81	0.85	34.3
21.5	29		69.05	8.5	2.5	2.9		9/20		70	2950	86.5	88	88.7	0.79	0.87	0.9	38.9
26	35	200L	166.67	6.2	2	2.2	0.35853	22/48	250	69	1475	89	90	90.5	0.69	0.79	0.84	49.4
33	45		107.15	8	2.2	2.5		8/18		74	2950	85.5	88	88.8	0.83	0.89	0.91	58.9
32	43.5	225S/M	206.45	8.1	2.6	3.3	0.69987	11/24	350	70	1480	89	90.1	90.6	0.76	0.83	0.88	57.9
38	52		123.39	8.7	2.6	3.3		8/18		82	2960	84.6	87.3	88.5	0.83	0.87	0.89	69.6
38	52	225S/M	246.79	7.8	2.3	2.6	0.76985	12/26	380	70	1480	89	90.4	91	0.75	0.83	0.88	68.5
45	60		142.38	8.3	2.5	2.8		7/15		82	2960	85	87.9	89	0.77	0.84	0.87	83.9
46	63	250S/M	301.03	8	2.3	2.6	0.97981	7/15	440	70	1470	89.2	90.8	91.4	0.76	0.83	0.88	82.5
55	75		179.18	8.6	2.2	2.8		6/13		82	2940	85.5	88.4	89.5	0.82	0.87	0.9	98.6
63	86	280S/M	408.15	6.8	2	2.5	2.16799	30/66	700	76	1480	92	92.5	93	0.8	0.86	0.88	111
75	100		236.5	8.4	1.9	2.8		16/35		83	2970	87.5	89.5	90.5	0.82	0.88	0.9	133
73	99	280S/M	473.04	6.6	1.7	1.9	2.32858	12/26	730	76	1470	92	93	93	0.83	0.87	0.88	129
87	118		280.96	8	1.9	2.1		8/18		83	2950	89	90.5	91	0.88	0.91	0.92	150
85	115	315S/M	547.63	7	1.9	1.9	2.81036	11/24	868	77	1475	92.5	93	93.2	0.77	0.84	0.86	153
100	136		322.72	8.5	2.1	2.4		7/15		84	2960	90	91	91.5	0.89	0.92	0.93	170
100	136	315S/M	645.45	5.7	1.9	1.9	3.77391	14/31	1005	77	1480	92	93	93.5	0.8	0.85	0.86	180
120	160		379.03	8.5	2.4	2.7		8/18		84	2965	91	92	93	0.89	0.91	0.92	202

Fan and Exhaust Application Motors Cast Iron Frame - Two Speed Improved Efficiency EFF2 - Constant torque VIII/VI Pole - Dahlander Winding

Output		IEC Frame	Full load torque C_n (Nm)	Locked rotor current I_l/I_n	Locked rotor torque T_l/T_n	Break-down torque T_b/T_n	Inertia J kgm²	Allowable locked rotor time Hot/Cold (s)	Weight (kg)	Sound dB (A)	Rated speed (rpm)	400 V						Full load current I_n (A)
												% of full load						
												Efficiency η			Power Factor (Cos φ)			
kW	HP											50	75	100	50	75	100	
50Hz - 400V - VIII/IV pole (750/1500 rpm) - Δ / YY connection																		
0.27	0.37	80	3.79	2.5	1.8	1.8	0.00294	10/22	15	42	685	35	41	48	0.46	0.55	0.64	1.27
0.4	0.55		2.72	4.2	1.6	1.8		9/20		44	1420	65	68	69.1	0.6	0.71	0.81	1.03
0.4	0.55	90S	5.52	3.2	2	2	0.00504	13/29	19	43	700	40	50	53	0.42	0.52	0.6	1.82
0.7	0.95		4.77	5	1.8	2		8/18		49	1400	71.5	73	73	0.68	0.8	0.86	1.61
0.52	0.7	90L	7.02	3.3	2	2	0.00672	8/18	23	43	700	45	53	57	0.42	0.53	0.63	2.09
0.9	1.22		6.16	5.2	1.8	2		7/15		49	1390	73.5	75	75	0.7	0.81	0.86	2.01
0.7	0.95	100L	9.4	4.2	1.9	2.2	0.01121	13/29	29	50	710	60	66	68	0.42	0.53	0.64	2.32
1.1	1.5		7.32	5.8	2	2.4		6/13		53	1440	71	75	75	0.61	0.74	0.82	2.58
1.1	1.5	100L	15.05	4.2	1.9	2.3	0.01289	12/26	31	50	700	62	67	68.5	0.44	0.56	0.66	3.51
1.8	2.45		12.03	5.5	2.1	2.4		6/13		53	1430	70	75	75	0.64	0.75	0.82	4.22
1.5	2	112M	19.51	5	2.5	2.5	0.02617	8/18	45	46	720	66	71	75	0.43	0.53	0.64	4.51
2.5	3.4		16.58	7	2.5	2.7		6/13		56	1440	78	80	80.5	0.72	0.82	0.88	5.09
1.9	2.6	132S	25.36	6.3	2.6	2.6	0.07527	7/15	67.5	48	720	70	74.5	76	0.44	0.57	0.67	5.39
3.7	5		24.56	7	2.4	2.4		6/13		60	1430	79.2	80.1	82	0.78	0.87	0.9	7.24
3.3	4.5	160M	43.3	5.2	2.1	2.7	0.12208	20/44	110	51	730	76.5	80.5	81.5	0.45	0.58	0.68	8.59
5.5	7.5		36.08	7	2	2.7		12/26		67	1460	84	85	85.2	0.8	0.88	0.91	10.23
3.7	5	160M	48.11	5.4	2.3	2.8	0.12927	10/22	119	51	730	72.5	77.5	79.5	0.43	0.55	0.65	10.3
7	9.5		46.02	6.5	2.2	2.6		6/13		67	1450	83.5	84.2	84.5	0.79	0.87	0.9	13.3
5.5	7.5	160M	73.17	5	2.1	2.4	0.14364	15/33	119	51	720	74	77.5	79.6	0.48	0.6	0.7	14.2
8.8	12		58.13	6.5	2.1	2.4		7/15		67	1450	83.2	84.3	84.5	0.79	0.86	0.88	17.1
7	9.5	160L	92.04	5	2.3	2.4	0.16518	12/26	127	51	725	75	79.5	80.5	0.46	0.58	0.68	18.5
11	15		72.41	6.5	2.2	2.6		6/13		67	1455	84	85	85	0.77	0.86	0.89	21
11	15	180L	144.33	7.3	2.3	2.5	0.30337	6/13	177	51	730	82	82.6	84	0.5	0.63	0.7	27
18	24.5		117.87	8.5	2.2	2.4		6/13		64	1460	85.8	86.3	87	0.81	0.88	0.9	33.2
17	23	200L	219.8	4.5	2	2.2	0.50227	26/57	255	53	735	84.5	86.5	87.2	0.54	0.67	0.74	38
27	37		177.4	6	2	2.4		10/22		69	1465	88	89	89.5	0.85	0.89	0.91	47.8
22	30	225S/M	288.66	7.5	2	2.3	1.22377	9/20	360	56	730	86.5	87.5	88	0.65	0.76	0.82	44
32	43.5		208.56	8.5	2	2.5		6/13		70	1465	87.5	88.5	89	0.89	0.93	0.94	55.2
26	35	225S/M	339.09	7.5	2	2.3	1.36497	7/15	425	56	725	86.2	87.3	88	0.67	0.78	0.82	52
37	50		242.21	8.8	2	2.3		6/13		70	1450	87.2	88.1	88.7	0.85	0.89	0.91	66.2
33	45	250S/M	432.98	7.2	1.9	2.2	1.55324	6/13	450	56	730	87	88.3	89	0.67	0.78	0.82	65.3
47	64		307.9	9	2.2	2.4		6/13		70	1460	87.5	88.4	90	0.86	0.9	0.92	81.9
38	52	280S/M	493.58	5	1.8	2.2	3.33245	25/55	650	59	740	87.8	89.5	90.5	0.53	0.63	0.69	87.8
56	76		359.48	7	1.8	2.2		12/26		76	1485	89.5	90.5	91	0.83	0.86	0.88	101
46	63	280S/M	602.05	4.5	1.7	2	2.5692	30/66	690	59	735	89	90	90.2	0.53	0.63	0.7	105
67	91		430.42	7	2	2.2		15/33		76	1485	90.5	91.4	91.8	0.84	0.88	0.89	118
56	76	315S/M	726.29	5.5	1.8	2.1	3.21158	25/55	890	62	735	89.5	90.5	91	0.58	0.7	0.75	118
83	113		536.29	7.2	2	2.5		11/24		77	1480	90.5	91.5	92	0.84	0.88	0.9	145
78	106	315S/M	1006.14	7	1.8	2.2	5.28596	10/22	990	62	740	88.6	90.6	91.1	0.64	0.74	0.78	158
115	156		737.87	8.4	2	2.3		6/13		77	1485	88	90	91.2	0.88	0.9	0.92	198

Notes:
**Class "F" insulation with ΔT105K*
Standard voltage, connection and frequency: 220-240V Δ 50Hz
380-415V Y 50Hz
380-415V Δ 50Hz
660-690V Y 50Hz
The values shown are subject to change without prior notice. To obtain guaranteed values please access our website.

Fan and Exhaust Application Motors Cast Iron Frame - Two Speed
Improved Efficiency EFF2 - Constant torque VI/IV Pole - Independent Winding

Output		IEC Frame	Full load torque C_n (Nm)	Locked rotor current I_l/I_n	Locked rotor torque T_l/T_n	Break-down torque T_b/T_n	Inertia J kgm²	Allowable locked rotor time Hot/Cold (s)	Weight (kg)	Sound dB (A)	Rated speed (rpm)	400 V						Full load current I_n (A)
												% of full load						
												Efficiency η			Power Factor (Cos φ)			
kW	HP											50	75	100	50	75	100	
50Hz - 400V - VI/IV pole (1000/1500 rpm) - Y / Y connection																		
0.22	0.3	80	4	2.19	2.3	2.8	0.00346	11/24	12	43	960	37	46	52	0.41	0.5	0.56	1.09
0.32	0.43		5.2	2.07	2.1	2.6		6/13		44	1460	48	55	61	0.4	0.51	0.59	1.28
0.26	0.36	80	3.5	2.63	2.1	2.7	0.00346	12/26	12	43	960	37	46	52	0.43	0.52	0.6	1.2
0.4	0.55		5	2.65	1.8	2.9		8/18		44	1460	50	58	62	0.49	0.6	0.69	1.35
0.38	0.52	90S	6.2	3.77	2.4	3.3	0.0056	6/13	16	45	970	48	58	63.7	0.4	0.5	0.59	1.46
0.65	0.88		6.4	4.23	2	2.9		5/11		49	1460	61.5	68	72.3	0.52	0.64	0.74	1.75
0.55	0.75	90L	4	5.49	2.2	2.9	0.00672	12/26	20	45	960	52	60	65	0.41	0.52	0.61	2
0.9	1.22		5.6	5.95	2	2.8		5/11		49	1440	67	72	73	0.54	0.67	0.77	2.31
0.9	1.22	100L	4.7	9.07	2.2	2.4	0.01121	9/20	21	44	945	59	65	67.7	0.51	0.62	0.71	2.7
1.3	1.75		5.8	8.54	1.8	2.4		8/18		53	1440	69.5	72	72.4	0.61	0.72	0.81	3.2
1.1	1.5	100L	4.5	11.21	2.1	2.3	0.00925	9/20	25	44	940	65	69	69.2	0.48	0.61	0.74	3.1
1.7	2.3		6	11.22	2	2.7		5/11		53	1440	73.5	76.5	76.7	0.56	0.7	0.8	4
1.5	2	112M	5.8	14.48	2.6	3	0.01889	10/22	36	48	970	70	74	77	0.51	0.62	0.69	4.08
2.3	3.1		6.6	14.91	1.8	2.6		5/11		56	1460	73	76	78	0.63	0.75	0.81	5.25
2	2.7	132S	6.2	19.25	2.8	3.2	0.05072	9/20	68	52	985	63	70	73	0.45	0.57	0.66	5.99
3.1	4.2		7.8	20.21	2.2	2.9		12/26		60	1460	82	84	84.2	0.64	0.75	0.83	6.4
2.8	3.8	132M	7.9	27.1	2.5	2.9	0.06242	9/20	79	52	985	77	81	82	0.48	0.6	0.69	7.14
4.3	5.8		7.2	27.81	2.2	2.5		8/18		60	1465	80	81	82	0.7	0.8	0.85	8.9
4.3	5.8	160M	5.5	41.78	2	2.6	0.11565	8/18	96	56	975	79	80	81	0.59	0.74	0.82	9.34
6.6	9		6.9	42.86	2	3		5/11		67	1475	76	80	82	0.6	0.75	0.84	13.8
5.7	7.7	160L	5.7	55.47	2	2.6	0.14456	7/15	127	56	975	80.5	81.5	82.6	0.6	0.75	0.83	12
8.7	11.8		6	56.38	1.9	3		6/13		67	1470	79.2	82.5	83.4	0.67	0.8	0.87	17.3
9.5	13	180L	8.4	93.17	2.5	2.9	0.30532	5/11	179	56	980	86	86.5	87	0.78	0.86	0.87	18.1
14	19		8.6	90.79	2.1	3		5/11		64	1470	86.5	87	87.2	0.88	0.91	0.92	25.2
11	15	180L	6.8	108.06	1.7	2.5	0.33308	5/11	200	56	975	84	85	85.5	0.74	0.84	0.88	21.1
16.5	22.5		9.3	107.51	2.2	2.9		5/11		64	1470	86.5	87.5	88	0.81	0.89	0.92	29.4
16	21.7	200L	7	154.74	2.7	2.8	0.46939	8/18	280	58	985	88	89.5	90	0.64	0.75	0.81	31.7
24	32.6		7	155.24	2.3	2.6		10/22		69	1475	88.5	90	90	0.8	0.87	0.89	43.2
21	28.5	225S/M	7	202.2	2.8	3	0.77479	7/15	379	61	990	84	87	88.3	0.55	0.68	0.78	44
31	42		7.7	197.99	2.5	3.3		7/15		70	1490	85	87.5	88.5	0.7	0.8	0.86	58.8
25	34	225S/M	7	241.23	2.9	3.2	0.91566	7/15	469	61	990	85	87	88	0.52	0.66	0.74	55.4
37	50		8.1	237.3	2.4	3.2		7/15		70	1480	90.5	91	91.5	0.76	0.85	0.88	66.3
32	43.5	250S/M	6.8	308.63	2.7	3.4	1.16219	6/13	520	61	990	86.3	88	89	0.57	0.69	0.77	67.4
47	64		8.6	302.72	2.6	3.4		7/15		70	1485	90	91.5	92	0.76	0.85	0.88	83.8
45	60	280S/M	7.1	423.56	2.9	2.4	2.58594	11/24	685	66	995	87	89	90	0.6	0.7	0.75	96.2
66	90		8.5	425.69	2.3	3		11/24		76	1485	89	91	92	0.72	0.82	0.86	120
54	73	280S/M	7.1	517.93	3	2.5	3.07081	14/31	810	66	990	89	90.3	91	0.58	0.7	0.75	114
80	109		8.4	515.56	2.6	3.1		10/22		76	1485	91	92.2	92.5	0.71	0.81	0.86	145
60	80	315S/M	6	567.59	2.2	2.2	4.82631	11/24	898	69	990	86	89	90	0.6	0.7	0.75	128
90	125		8	591.24	2.7	2.9		9/20		77	1485	89	91	91.5	0.71	0.8	0.85	167
62	84	315S/M	7.7	595.97	3	3.3	3.39405	11/24	898	69	990	85	88.5	90	0.56	0.67	0.72	138
92	126		8.5	595.97	2.8	2.9		9/20		77	1485	88	90.5	91.5	0.8	0.86	0.87	169
75	100	315S/M*	7	709.49	2.9	2.8	3.79811	5/11	1005	69	990	86	89	90	0.6	0.69	0.75	160
110	150		6.6	711.89	2.2	2.4		5/11		77	1480	89	91	92	0.81	0.86	0.88	196

Fan and Exhaust Application Motors Cast Iron Frame - Three Speed Improved Efficiency EFF2

Output		IEC Frame	Locked rotor current I_l/I_n	Full load torque C_n (Nm)	Locked rotor torque T_l/T_n	Break-down torque T_b/T_n	Inertia J (kgm²)	Allowable locked rotor time Hot/ Cold (s)	Weight (kg)	Sound dB (A)	Rated Speed (rpm)	400V						
												Efficiency η			Power Factor (Cos φ)			Full load Current In (A)
												% of full load						
kW	HP											50	75	100	50	75	100	
VIII/VI/IV																		
0,15	0,2		1,94	3	2,1	2,5	0,007	30/66	24	43	725	31	38	43	0,42	0,49	0,56	0,9
0,75	1	90L	4,81	5,2	1,9	2,6	0,007	5/11	24	49	1460	56,5	64	67,5	0,47	0,6	0,7	2,29
0,25	0,33		2,4	4	1,9	2,5	0,007	15/33	24	45	965	49	56	58	0,44	0,54	0,63	0,988
0,22	0,3		2,93	3,4	2,1	2,6	0,006	30/66	23	43	720	37	46	50	0,4	0,47	0,54	1,18
1	1,36	90L	6,59	5,6	1,8	2,6	0,006	5/11	23	49	1450	66	71	72	0,54	0,67	0,76	2,64
0,3	0,4		2,88	4,3	2,5	3,3	0,006	15/33	23	45	975	46	54	58	0,38	0,47	0,55	1,36
0,37	0,5		4,84	3,4	2	2,5	0,008	30/66	30	50	725	44	53	57	0,36	0,45	0,53	1,77
1,5	2	100L	9,69	6,2	2	3	0,008	5/11	30	53	1450	71	76	77	0,55	0,67	0,78	3,6
0,6	0,8		5,79	4,4	2,1	2,7	0,008	8/18	30	44	970	58	66	68	0,4	0,5	0,58	2,2
0,45	0,6		5,85	3,2	1,8	2,4	0,011	30/66	33	50	720	47	55	59	0,37	0,45	0,54	2,04
1,9	2,6	100L	12,64	6	2	2,6	0,011	5/11	33	53	1445	74	77,5	78	0,56	0,69	0,78	4,51
0,7	0,95		6,91	4,5	2,2	2,7	0,011	18	33	44	965	61	67,5	68	0,41	0,52	0,61	2,44
0,6	0,8		7,91	3,7	1,8	2,1	0,026	30/66	49	46	710	62	67	68	0,46	0,58	0,66	1,93
2,4	3,3	112M	16,1	6,5	2,2	2,8	0,026	5/11	49	56	1440	75	78	79	0,62	0,76	0,81	5,41
0,85	1,15		8,33	5	2	2,7	0,026	10/22	49	48	970	63	69	71	0,45	0,56	0,65	2,66
0,8	1,1		10,51	4,4	1,6	2,8	0,074	40/88	70	48	735	64	71	74	0,35	0,44	0,53	2,94
3,8	5,2	132S	24,93	8,5	3	3,3	0,074	6/13	70	60	1465	79	82	83	0,59	0,72	0,79	8,36
1,3	1,8		12,9	6,5	2	2,8	0,074	15/33	70	52	980	72	76	77	0,51	0,63	0,71	3,43
1,1	1,5		14,33	4,2	1,5	2,6	0,094	30/66	88	48	735	66	72	75	0,36	0,47	0,55	3,85
4,4	5,9	132M	28,19	9,4	2,9	3,2	0,094	5/11	88	60	1470	78	82	83	0,56	0,69	0,78	9,81
1,5	2		14,33	6,7	2	2,8	0,094	20/44	88	52	980	76	80	81	0,52	0,64	0,73	3,66
1,8	2,44		23,32	4	1,8	2,2	0,145	30/66	126	51	735	73	77	78	0,46	0,59	0,66	5,05
7,5	10	160M	47,46	7	1,5	2,9	0,145	5/11	126	67	1480	80	83	84	0,69	0,8	0,84	15,3
2,5	3,4		24,12	6,6	2,2	3,5	0,145	6/13	126	56	990	67,5	73,5	77	0,44	0,56	0,65	7,21
2,2	3		28,67	4,2	2	2,3	0,007	20/44	17	51	735	74	77	78	0,45	0,57	0,66	6,17
9,2	12,5	160L	59,53	6,5	1,9	2,4	0,007	5/11	17	67	1475	81	83	84	0,7	0,81	0,86	18,4
3,1	4,2		29,8	6,3	2,2	2,7	0,007	1022	17	56	990	69	74,5	78	0,45	0,57	0,66	8,69

Notes:
**Class "F" insulation with ΔT105K*
Standard voltage, connection and frequency: 220-240V Δ 50Hz 380-415V Δ 50Hz
380-415V Y 50Hz 660-690V Y 50Hz
The values shown are subject to change without prior notice. To obtain guaranteed values please access our website.

Fan and Exhaust Application Motors Cast Iron Frame - Three Speed Improved Efficiency EFF2

Output		IEC Frame	Locked rotor current I_l/I_n	Full load torque C_n (Nm)	Locked rotor torque T_l/T_n	Break-down torque T_b/T_n	Inertia J (kgm²)	Allowable locked rotor time Hot/ Cold (s)	Weight (kg)	Sound dB (A)	Rated Speed (rpm)	400V						
												Efficiency η			Power Factor (Cos φ)			Full load Current In (A)
												% of full load						
kW	HP											50	75	100	50	75	100	
XII/VI/IV																		
0,06	0,08		1,2	1,8	1,8	2,1	0,006	30/66	23	44	470	15	20	22	0,45	0,5	0,55	0,716
0,3	0,4	90L	2,88	4	1,8	2,6	0,006	5/11	23	45	975	40	50	54	0,42	0,5	0,59	1,36
0,95	1,3		6,32	6	2	2,3	0,006	10/22	23	49	1445	68	71	72	0,54	0,67	0,77	2,47
0,11	0,15		2,22	2,1	1,9	2,6	0,008	50/110	30	47	475	18	25	30	0,37	0,41	0,45	1,18
0,55	0,75	100L	5,43	5	2	3	0,008	10/22	30	44	970	48	57	62	0,38	0,47	0,55	2,33
1,5	2		9,69	6,2	2	2,8	0,008	6/13	30	53	1450	74,5	77	78	0,55	0,68	0,78	3,56
0,18	0,25		3,66	2,2	1,7	2,5	0,026	40/88	49	54	480	45	33	36	0,32	0,36	0,38	1,9
0,75	1	112M	7,17	5,5	3	3,3	0,026	6/13	49	48	980	49	58	62	0,35	0,42	0,5	3,49
2	2,7		13,08	6,2	1,8	2,6	0,026	8/18	49	56	1450	76	78,5	79	0,67	0,78	0,82	4,46
0,25	0,33		4,73	3	2,3	3,5	0,074	60/132	70	54	490	30	39	45	0,28	0,33	0,37	2,17
1,3	1,8	132S	12,77	7	2,3	3,8	0,074	7/15	70	52	990	61	69	73	0,37	0,47	0,56	4,59
3,2	4,4		21,1	7,5	2	2,9	0,074	5/11	70	60	1465	75	79	81	0,64	0,76	0,83	6,87
0,4	0,55		7,8	3,3	2,1	3,2	0,094	40/88	88	54	495	33	42	51	0,28	0,32	0,39	2,9
1,85	2,5	132M	17,74	7	2,4	3,2	0,094	5/11	88	52	990	60	68	73	0,33	0,43	0,52	7,03
4,4	5,9		28,19	7,5	2	2,6	0,094	5/11	88	60	1470	79	81,5	82	0,66	0,78	0,86	9
0,66	0,9		12,9	2,9	2,2	2,6	0,145	30/66	126	58	490	39	47,5	53	0,33	0,39	0,45	4
2,6	3,5	160M	24,71	7	2,6	3	0,145	6/13	126	56	995	69	75	78	0,41	0,53	0,62	7,76
6,6	9		42,86	4	1,8	3	0,145	5/11	126	67	1475	76	81	84	0,59	0,72	0,81	14
0,9	1,22		17,49	2,8	2,2	2,7	0,007	20/44	17	43	490	38	47	53	0,34	0,4	0,46	5,33
3,7	5	160L	35,47	7,2	2,6	3	0,007	5/11	17	56	990	68	75	78	0,42	0,54	0,64	10,7
9,2	12,5		59,53	6,9	2	2,8	0,007	5/11	17	67	1475	80	83	84	0,71	0,82	0,88	18

Fan and Exhaust Application Motors Cast Iron Frame

Mechanical Data

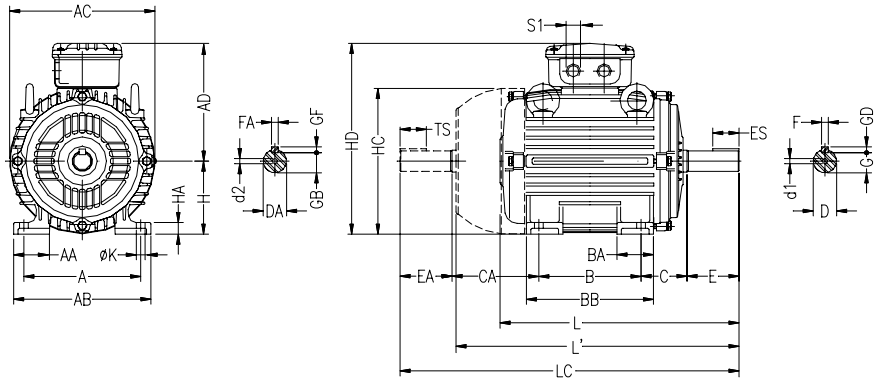

IEC FRAME	A	AA	AB	AC	AD	B	BA	BB	C	CA	SHAFT DIMENSIONS											H	HA	HC	HD	K	L'	L	LC	S1	d1	d2	BEARINGS	
											D	E	ES	F	G	GD	DA	EA	TS	FA	GB	GF												D.E.	N.D.E.
63	100	21	116	125	113	80	22	95	40	78	11j6	23	14	4	8.5	4	9j6	20	12	3	7.2	3	63	8	124	124	7	182	216	241		EM4	EM3	6201-ZZ	
71	112	30	132	141	121	90	38	113.5	45	88	14j6	30	18	5	11	5	11j6	23	14	4	8.5	4	71	12	139	139		207	248	276	2xM20x1.5	DM5	EM4	6203-ZZ	6202-ZZ
80	125	35	149	159	130	100	40	125.5	50	93	19j6	40	28	6	15.5	6	14j6	30	18	5	11	5	80	13	157	157	10	237	276	313		DM6	DM4	6204-ZZ	6203-ZZ
90S	140	38	164	179	150		42	131	56	104	24j6	50	36	8	20	7	16j6	40	28		13		90	15	177	177		259	304	350	2xM25x1.5	DM8	DM6	6205-ZZ	6204-ZZ
90L						125		156																				284	329	375					
100L	160	49	188	199	160		50	173	63	118	28j6	60	45		24		22j6	50	36	6	18.5	6	100	16	198	198	12	322	376	431		DM10	DM8	6206-ZZ	6205-ZZ
112M	190	48	220	222	180	140		177	70	128							24j6			8	20	7	112	18.5	235	235		336	393	448	2xM32x1.5			6307-ZZ	6206-ZZ
132S	216	51	248	270	207		55	187	89	150	38k6	80	63	10	33	8	28j6	60	45		24		132	20	274	274		393	452	519		DM12	DM10	6308-ZZ	6207-ZZ
132M						178		225																				431	490	557					
160M	254	64	308	312	250	210	65	254	108	174	42k6	110	80	12	37	8	42k6	110	80	12	37	8	160	22	317	317	14.5	530	598	712	2xM40x1.5	DM16		6309-C3	6209-Z-C3
160L						254		298																				574	642	756					
180M	279	80	350	358	270	241	75	294	121	200	48k6			14	42.5	9	48k6			14	42.5	9	180	28	360	360		586	664	782				6311-C3	6211-Z-C3
180L						279		332																				624	702	820					
200M	318	82	385	396	294	267	85		133	222	55m6			16	49	10							200	30	402	402	18.5	638	729	842	2xM50x1.5	M20		6312-C3	6212-Z-C3
200L						305		370																				676	767	880					
225S/M	356	80	436	476	368	286	105	391	149	280	55m6*	140	100	18	53	11	55m6*	140	100	16	49	10	225	34	466	466		718	817	935				6314-C3	
						311				255	60m6						60m6											748	847	995					
250S/M	406	100	506				138	449	168	312	60m6*						60m6*						250	42	491	491	24	824	923	1071	2xM63x1.5				
						349				274	65m6						60m6																		
280S/M	457		557		463	368	142	510	190	350	65m6*						60m6*						280		578	578		937	1036	1188				6316-C3	
				600		419				299	75m6			20	67.5	12	65m6				58													
315S/M	508	120	628		492	406	152	558	216	376	65m6*			18	58	11	60m6*				53		315	52	613	613	28	1027	1126	1274				6314-C3	
						457				325	80m6	170	160	22	71	14	65m6				58							1057	1156	1308				6319-C3	6316-C3
355M/L	610	140	750	816	680	560	200	760	254	458	75m6*	140	125	20	67.5	12	60m6*	140	125	18	53	11	355	50	725	725		1248	1396	1561		M20		6316-C3	6314-C3
						630				388	100m6	210	200	28	90	16	80m6	170	160	22	71	14						1318	1466	1661		M24	M20	NU-322-C3	6319-C3

**Shaft dimension for II pole motors, only for direct coupling.*

All dimensions are given in millimeters.
Larger and smaller flanges, on request.
The values shown are subject to change without prior notice.

Fan and Exhaust Application Motors Cast Iron Frame

Mechanical Data

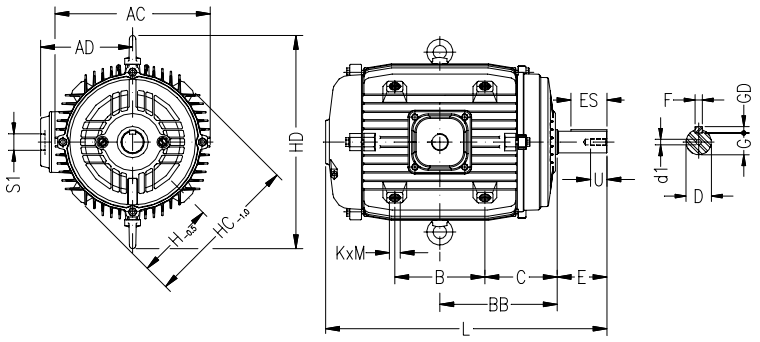

IEC FRAME	AC	AD	B	BB	C	SHAFT DIMENSIONS						H	HC	HD	L	d1	S1		KxM	BEARINGS	
						D	E	ES	F	G	GD									D.E.	N.D.E.
71	196	91	71	90	54,5	14j6	30	18	5	11	5	75	150	-	207	DM5	M20x1.5	NPT1/2"	M8x1.25x10	6203-ZZ	6202-ZZ
80	196	100	80	100	60,0	19j6	40	28	6	15.5	6	85	170		238	DM6			M12x1.75x18	6204-ZZ	6203-ZZ
90S	174	110	65	106	73.5	24j6	50	36	8	20	7	95	190		258	DM8		NPT3/4"		6205-ZZ	6204-ZZ
90L			90	119											283						
100L	196	122	100	133	83,0	28j6	60	45		24		105	210		322	DM10	M25x1.5			6206-ZZ	6205-ZZ
112M	222	137	100	140	90,0							117	234	316	336			NPT1"		6307-ZZ	6206-ZZ
132S	260	165	125	159	96,5	38k6	80	63	10	33	8	145	290	354	393	DM12			M16x2x24	6308-ZZ	6207-ZZ
132M			140	178	108,0										430						
160M	300	185	156	213	135,0	42k6	110	80	12	37		161	322	410	530	DM16	M32x1.5	NPT1.1/4"	M20x2.5x30	6309-C3	6209-Z-C3
160L			200	235											574						
180L	345	205		260.5	160.5	48k6			14	42.5	9	184.5	369	455	624			NPT1.1/2"		6311-C3	6211-Z-C3
200M	380	218	186	271	173.5	55m6			16	49	10	215.5	431	610	638	DM20	M40X1.5	NPT2"	M24x3x45	6312-C3	6212-Z-C3
200L			224	290											676						
225S/M	476	276	224	305	192,5	*55m6	140	125	18	53	11	255	510	610	748		M50X1.5	NPT3"		6312-C3	6212-Z-C3
						60m6															
250S/M				343	230,5	*60m6									824		M63X1.5			6312-C3	6212-Z-C3
						65m6				58											

"FF" Flange

IEC FRAME	"C" DIN FLANGE DIMENSIONS							N° OF HOLES
	FLANGE	C	M	N	P	S	T	
63	C-90	40	75	60	90	M5	2.5	4
71	C-105	45	85	70	105	M6		
80	C-120	50	100	80	120		3	
90S/L	C-140	56	115	95	140	M8		
100L	C-160	63	130	110	160		3.5	
112M		70						
132S/M	C-200	89	165	130	200	M10		

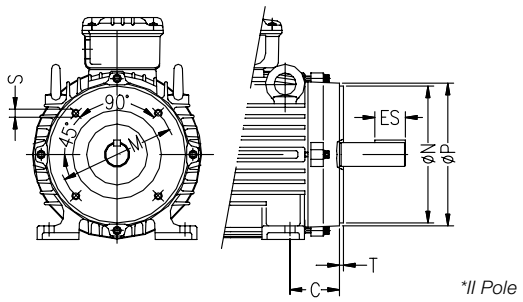

*II Pole

"C" Din Flange

IEC FRAME	"FF" FLANGE DIMENSIONS									N° OF HOLES
	FLANGE	C	LA	M	N	P	T	S	α	
63	FF-115	40	9	115	95	140	3	10	45°	4
71	FF-130	45		130	110	160	3.5			
80	FF-165	50	10	165	130	200		12		
90S/L		56								
100L	FF-215	63	11	215	180	250	4	15		
112M		70								
132S/M	FF-265	89	12	265	230	300				
160M/L	FF-300	108	18	300	250	350	5	19		
180M/L		121								
200M/L	FF-350	133		350	300	400				
225S/M	FF-400	149		400	350	450			22°30'	8
250S/M	FF-500	168		500	450	550				
280S/M		190								
315S/M	FF-600	216	22	600	550	660	6	24		
355M/L	FF-740	254		740	680	800				

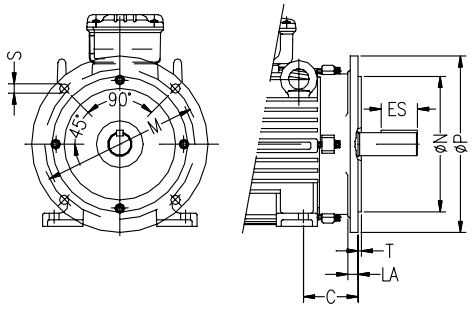

Fan and Exhaust Application Motors Aluminium Frame Improved Efficiency EFF2

Standard Features:

- Three-phase, multivoltage, IP55, TEFC
- Output: 0.12 up to 9.2kW
- Frames: 63 up to 132M
- Voltage: 220-240/380-415V (up to 100L)
  380-415/660V (from 112M and up)
- Class “F” insulation (ΔT=80K)
- Continuous duty: S1
- Design N
- Ambient temperature: 40°C, at 1000 m.a.s.l.
- Squirrel cage rotor/Aluminium die cast
- V´ring seals
- Metric threaded cable entries on the terminal box
- Suitable for inverter duty applications
- Single-speed (technical data for two speed and three speed available under request)
- Metric threaded cable entries
- 1 meter long flying leads for pad mounted motors (without terminal box)
- Color - RAL 5007

Options available, on request.

Typical Applications:

These motors are designed specially for axial fan manufacturers. The design allows high output in light and compact frame sizes for the following applications:

- Fan and exhausters
- Tunnels
- Subways
- Air conditioning systems
- Underground coal mines
- Shopping centers
- Supermarkets
- Other applications

Bearings
WEG motors are fitted with the highest quality bearings selected from the best manufacturers in the world and designed to ensure long life of the motor even under heavy working conditions.
WEG also uses the Super-Premium Polyrex EM polyurea grease that is specially formulated for electric motor bearings. Its advanced thickener formulation provides low noise characteristics, improved bearing performance and protection.

Nameplate
Stainless steel nameplate
ensuring a permanent record of all motor data.

Winding
The wire is enameled with class H varnish. Supplied with patented WISE (WEG Insulation System Evolution), which allows three times longer motor lifetime designed to operate in environments with excess of moisture and suitable for VFD application.

Rotor
The advantages of aluminium rotors are lower inertia, higher starting torque and higher mechanical stiffness, from others. They are built with low magnetic losses steel laminations, which are thermal and chemically treated to improve efficiency and minimize mechanical stress.

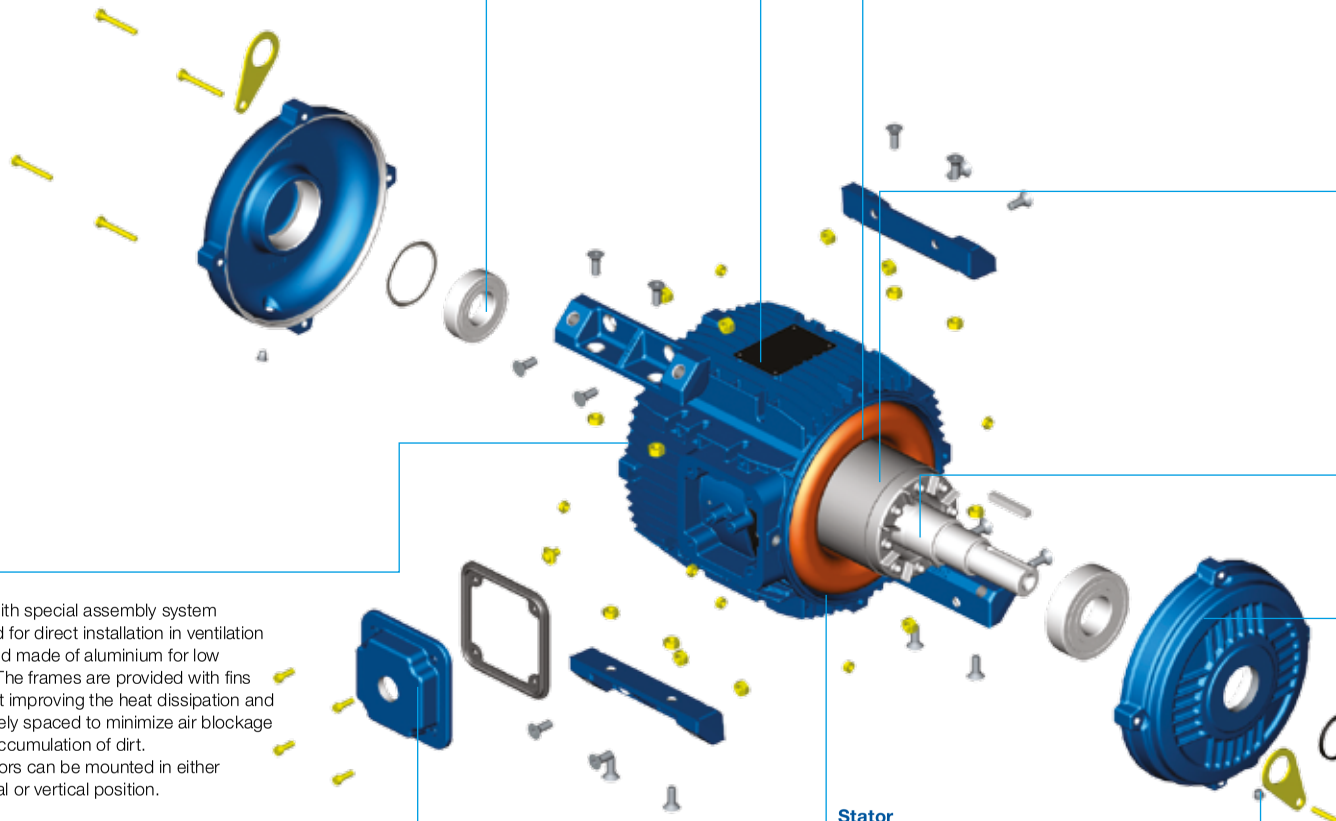

Shaft
WEG uses SAE/AISI 1040/45 carbon steel as standard, which provides high mechanical strength, preventing bending under load and minimizes fatigue which extends lifetime. Specially designed to withstand torques caused during motor acceleration and deceleration. Upon special design motor, shaft can have second shaft end.

Endshields
Made of cast iron, they are provided with external fins for better heat dissipation, thus increasing bearing life.

Frame
Frame with special assembly system prepared for direct installation in ventilation ducts and made of aluminium for low weight. The frames are provided with fins aiming at improving the heat dissipation and adequately spaced to minimize air blockage due to accumulation of dirt.
The motors can be mounted in either horizontal or vertical position.

Seals
WEG motors are fitted with either V-ring seals, Oil seals, Lip seals and may also be fitted with Labyrinth Taconite or W3Seal to ensure the best possible protection under dusty and high moisture environments.

Stator
Built with low magnetic loss steel lamination reducing losses and operating temperature

Terminal Box
Motor supplied with terminal box base and extended leads (1 meter) allowing lead connection outside of the duct. Loose terminal box and longer power supply leads can also be supplied.

Drain Hole
Provided with plastic drain plug allowing drainage of condensed water.

Fan and Exhaust Application Motors Aluminium Frame - Single Speed Improved Efficiency EFF2

Output		IEC Frame	Full load torque C_n (Nm)	Locked rotor current I_r/I_n	Locked rotor torque T_r/T_n	Break-down torque T_b/T_n	Inertia J kgm²	Allowable locked rotor time Hot/Cold (s)	Weight (kg)	Sound dB (A)	Rated speed (rpm)	400 V						Full load current I_n (A)
												% of full load						
												Efficiency η			Power Factor (Cos φ)			
kW	HP											50	75	100	50	75	100	
II Pole - 3000 rpm																		
0.12	0.16	63	0.4	4.8	3	3.1	0.0001	27/59	6.3	52	2810	49	57	60.5	0.52	0.62	0.72	0.398
0.18	0.25	63	0.64	4.5	2.8	2.7	0.00014	30/66	6.6	52	2730	60	66	66.5	0.6	0.72	0.81	0.482
0.25	0.33	63	0.84	4.5	2.9	2.9	0.00016	25/55	7.1	52	2760	61.5	66.5	69.3	0.58	0.7	0.79	0.659
0.37	0.5	71	1.25	5.5	3	3.2	0.00033	23/51	9.5	56	2810	67.2	72	73.6	0.65	0.77	0.85	0.854
0.55	0.75	71	1.88	5.5	2.9	3	0.00045	16/35	10.5	56	2800	72.2	76	76	0.68	0.78	0.85	1.23
0.75	1	80	2.52	5.8	2.9	3.1	0.00079	25/55	14	59	2790	76	80	79.5	0.76	0.84	0.88	1.55
1.1	1.5	80	3.75	6	3	2.9	0.0009	13/29	14.5	59	2810	77.1	80.2	79.7	0.69	0.8	0.86	2.32
1.5	2	90S/L	4.9	6.8	2.8	3	0.00205	14/31	20	64	2865	78.5	81.5	82	0.7	0.8	0.85	3.11
2.2	3	90S/L	7.42	6.6	2.8	3	0.00242	9/20	22	64	2840	82.2	83.7	83.4	0.69	0.8	0.85	4.48
3	4	100L	9.76	7.2	2.6	2.8	0.00616	9/20	31	67	2880	83.2	85.7	85.6	0.77	0.85	0.88	5.75
4	5.5	112M	13.37	7.6	2.7	3.1	0.00842	15/33	41.5	64	2890	85	87.5	87.5	0.76	0.84	0.88	7.5
5.5	7.5	112M	18.36	7.7	2.5	3	0.00995	10/22	40	64	2870	86.5	87.5	87.5	0.8	0.87	0.9	10.1
5.5	7.5	132M	17.95	8	2.7	3.2	0.02056	18/40	60.5	68	2935	84	87.1	88.3	0.73	0.82	0.87	10.3
7.5	10	132M	24.01	7.3	2.5	2.9	0.0243	10/22	66.5	68	2925	86.5	88.9	89.2	0.77	0.86	0.89	13.6
9.2	12.5	132M	29.97	8	2.8	3.2	0.02804	8/18	72	68	2930	85.5	88.5	89	0.75	0.84	0.88	17
HIGH-OUTPUT DESIGN																		
0.37	0.5	63	1.28	5.2	3.1	2.9	0.00021	14/31	8	52	2740	67	71	71.3	0.57	0.7	0.79	0.948
0.75	1	71	2.5	6.2	3.1	3.1	0.00052	8/18	11	56	2810	69	73	74	0.65	0.76	0.84	1.74
1.5	2	80	5.07	6	3	2.7	0.00096	10/22	12.5	59	2770	78	79	78.2	0.67	0.81	0.86	3.22
3	4	90S/L*	9.93	6.2	3.2	3.1	0.00266	6/13	23.5	64	2830	81	82	82	0.55	0.68	0.78	6.77
4	5.5	100L	13.46	7.5	2.9	3.1	0.00672	7/15	33	67	2870	81	82.3	82.5	0.72	0.81	0.86	8.14
7.5	10	112M*	24.47	7.6	3	3	0.00995	6/13	45	64	2870	86.5	87.5	87.5	0.59	0.72	0.81	15.3
IV Pole - 1500 rpm																		
0.12	0.16	63	0.79	4.2	2.4	2.5	0.00045	20/44	7	44	1415	45	54	58.5	0.46	0.56	0.67	0.442
0.18	0.25	63	1.25	4	2.2	2.5	0.00056	23/51	7.5	44	1400	53.8	59.5	62	0.52	0.63	0.72	0.582
0.25	0.33	71	1.64	5	3	3.1	0.00079	48/106	10.5	43	1410	68.5	71.5	73	0.5	0.61	0.7	0.706
0.37	0.5	71	2.52	4.4	2.7	2.8	0.00079	37/81	11	43	1395	68	72	73.5	0.48	0.6	0.7	1.04
0.55	0.75	80	3.68	6	2.6	2.8	0.00242	17/37	14	44	1430	69	73	75	0.56	0.69	0.78	1.36
0.75	1	80	4.96	5.5	2.4	2.6	0.00294	14/31	15.3	44	1415	73.5	76.2	76.2	0.62	0.74	0.83	1.71
0.75	1	90S/L	4.91	6.5	2.7	2.8	0.00392	14/31	17	49	1430	71	74.4	74.4	0.58	0.71	0.79	1.84
1.1	1.5	90S/L	7.37	6.5	3	3	0.00504	13/29	20	49	1430	76	80	80.6	0.57	0.69	0.78	2.53
1.5	2	90S/L	9.89	6.2	2.7	2.7	0.00672	12/26	23	49	1420	80.3	82	81.7	0.64	0.77	0.83	3.19
2.2	3	100L	14.84	6.7	2.7	2.9	0.00842	14/31	32	53	1420	81	82.3	83	0.65	0.78	0.83	4.61
3	4	100L	19.93	6.5	2.7	2.7	0.00995	10/22	34	53	1410	83.6	85	84.7	0.68	0.79	0.86	5.94
4	5.5	112M	27.02	7.5	2.7	2.8	0.01875	12/26	45.5	56	1430	86	87.4	87.1	0.7	0.81	0.87	7.62
5.5	7.5	112M*	36.33	6.5	2.5	2.6	0.01875	8/18	45.5	56	1450	84	85.7	85.7	0.54	0.66	0.75	12.4
7.5	10	132M	47.95	8	2.5	2.8	0.05427	8/18	68	60	1465	86.4	88.4	88.6	0.7	0.8	0.86	14.2
9.2	12.5	132M	59.93	8	2.5	3	0.06202	7/15	74	60	1465	86	88.2	88.5	0.68	0.8	0.85	17.7
HIGH-OUTPUT DESIGN																		
0.25	0.33	63	1.64	5	3.1	3.1	0.00067	17/37	8.5	44	1415	52	60	62	0.44	0.54	0.65	0.895
0.55	0.75	71	3.8	5	2.8	2.9	0.00096	19/42	12	43	1385	66	70.5	72	0.45	0.58	0.68	1.62
1.1	1.5	80	7.61	5	2.3	2.3	0.00315	10/22	15.3	44	1385	65	68.5	69	0.55	0.7	0.81	2.84
2.2	3	90S/L	14.94	5.8	2.7	2.5	0.00672	8/18	23	49	1410	75	76.5	76.5	0.57	0.71	0.8	5.19
4	5.5	100L*	27.79	6.7	2.6	2.6	0.01072	7/15	34	53	1390	81.5	82.2	82	0.64	0.76	0.83	8.483

Notes:
**Class "F" insulation with ΔT105K*
Standard voltage, connection and frequency: 220-240V Δ 50Hz
380-415V Y 50Hz
380-415V Δ 50Hz
660-690V Y 50Hz
The values shown are subject to change without prior notice. To obtain guaranteed values please access our website.

Fan and Exhaust Application Motors Aluminium Frame - Single Speed Improved Efficiency EFF2

Output		380 V								415 V							
		Rated speed (rpm)	% of full load						Full load current I_n (A)	Rated speed (rpm)	% of full load						Full load current I_n (A)
			Efficiency η			Power Factor (Cos φ)					Efficiency η			Power Factor (Cos φ)			
kW	HP		50	75	100	50	75	100			50	75	100	50	75	100	
II Pole - 3000 rpm																	
0.12	0.16	2780	51	58	62	0.56	0.67	0.77	0.382	2820	46	55	59.5	0.49	0.59	0.68	0.413
0.18	0.25	2700	62	66.5	66	0.65	0.76	0.84	0.493	2755	58	64.5	66	0.55	0.67	0.77	0.493
0.25	0.33	2730	63.5	67.5	69.5	0.63	0.75	0.82	0.666	2790	59.5	65	68.5	0.54	0.66	0.75	0.677
0.37	0.5	2790	68.8	72.5	73.5	0.7	0.81	0.87	0.879	2825	66	71.5	73.6	0.6	0.73	0.82	0.853
0.55	0.75	2770	73.1	76	75.2	0.73	0.82	0.87	1.28	2820	71.1	75.7	76.2	0.64	0.75	0.84	1.2
0.75	1	2770	76.5	79.7	78.5	0.79	0.86	0.89	1.63	2810	75.5	80.1	80	0.73	0.82	0.87	1.5
1.1	1.5	2790	78.2	80.4	79.3	0.74	0.84	0.88	2.39	2825	76	79.8	79.8	0.64	0.76	0.84	2.28
1.5	2	2850	79.3	81.6	81.6	0.74	0.83	0.87	3.21	2875	77.5	81.5	82.1	0.66	0.77	0.83	3.06
2.2	3	2820	82.8	83.6	83.3	0.75	0.84	0.87	4.61	2850	81.5	83.6	84.3	0.64	0.76	0.83	4.37
3	4	2870	83.5	85.6	85.1	0.8	0.86	0.89	6.02	2890	82.8	85.6	85.6	0.74	0.84	0.87	5.6
4	5.5	2880	85.5	87.5	87.2	0.8	0.86	0.89	7.83	2900	84.5	87.4	88.2	0.72	0.82	0.87	7.25
5.5	7.5	2860	87	87.5	87.2	0.83	0.89	0.91	10.5	2880	86	87.5	87.7	0.77	0.85	0.89	9.8
5.5	7.5	2930	84.5	87.5	88.2	0.77	0.85	0.89	10.6	2940	83.5	86.8	88.2	0.69	0.8	0.85	10.2
7.5	10	2915	87	89	88.8	0.81	0.87	0.9	14.3	2930	86	88.8	89.3	0.73	0.83	0.87	13.4
9.2	12.5	2920	86	88.7	89	0.79	0.87	0.9	17.5	2935	85	88.3	89	0.71	0.81	0.86	16.7
HIGH-OUTPUT DESIGN																	
0.37	0.5	2710	69.5	71.7	71	0.62	0.75	0.83	0.954	2765	65	70	71	0.52	0.66	0.76	0.954
0.75	1	2790	71	74	74	0.7	0.8	0.87	1.77	2830	67	71.5	73.5	0.6	0.71	0.8	1.77
1.5	2	2750	79	79.5	77	0.72	0.84	0.88	3.36	2790	77	78.5	78.5	0.62	0.77	0.84	3.16
3	4	2800	82	82.5	81.5	0.61	0.74	0.81	6.9	2845	80	81.5	81.5	0.5	0.64	0.74	6.92
4	5.5	2850	81.5	82.5	82	0.77	0.84	0.88	8.42	2890	80.3	82	82.5	0.68	0.78	0.84	8.03
7.5	10	2850	86.5	87	87	0.66	0.79	0.85	15.4	2885	85	87	87	0.53	0.67	0.76	15.8
IV Pole - 1500 rpm																	
0.12	0.16	1405	47	55	59	0.49	0.6	0.7	0.441	1425	42	52	58	0.43	0.52	0.63	0.457
0.18	0.25	1385	55.8	60.5	62.5	0.55	0.67	0.76	0.576	1410	51	57.5	61	0.48	0.59	0.69	0.595
0.25	0.33	1400	70	72	72.5	0.53	0.65	0.72	0.728	1420	67	71	73	0.47	0.58	0.68	0.701
0.37	0.5	1385	70	73	73.6	0.52	0.65	0.73	1.05	1405	65	71	73.2	0.44	0.56	0.67	1.05
0.55	0.75	1420	70	73.5	75	0.61	0.73	0.81	1.38	1440	67	72.5	74.6	0.53	0.66	0.75	1.37
0.75	1	1400	75	76.5	76	0.66	0.78	0.85	1.76	1430	72	76	76.2	0.59	0.71	0.81	1.69
0.75	1	1415	72	74.6	74	0.62	0.74	0.81	1.9	1440	70	74.4	74.4	0.54	0.68	0.77	1.82
1.1	1.5	1415	77.5	80.5	80.5	0.63	0.74	0.81	2.56	1435	74.5	79	80.3	0.53	0.64	0.74	2.58
1.5	2	1410	81.2	82.2	81	0.68	0.8	0.85	3.31	1430	79.3	81.5	81.8	0.61	0.74	0.81	3.15
2.2	3	1410	81.5	82	81.7	0.69	0.81	0.85	4.81	1430	80.5	82.3	83	0.61	0.75	0.81	4.55
3	4	1400	84	84.9	84.2	0.72	0.82	0.87	6.22	1420	83.2	85.1	84.9	0.65	0.77	0.84	5.85
4	5.5	1420	86.5	87.5	86.7	0.74	0.84	0.89	7.88	1440	85.2	87.2	86.7	0.67	0.78	0.84	7.64
5.5	7.5	1445	85	86	85.7	0.6	0.72	0.79	12.3	1455	82	85.7	85.7	0.49	0.62	0.71	12.6
7.5	10	1465	87	88.6	88.4	0.75	0.84	0.88	14.6	1470	85.6	88	88.6	0.65	0.77	0.83	14.2
9.2	12.5	1460	86.7	88.2	88.2	0.74	0.83	0.87	18.2	1465	85.3	87.7	88.2	0.63	0.76	0.82	17.7
HIGH-OUTPUT DESIGN																	
0.25	0.33	1405	54	61	63	0.49	0.6	0.7	0.861	1420	49	58	61	0.41	0.51	0.6	0.95
0.55	0.75	1370	69	72	72.5	0.51	0.63	0.72	1.6	1400	62	68	71	0.42	0.53	0.64	1.68
1.1	1.5	1370	68	69	69.5	0.61	0.76	0.86	2.8	1400	60	66	67	0.5	0.65	0.76	3.01
2.2	3	1390	76	77	76	0.65	0.75	0.83	5.3	1420	73	76	76.5	0.53	0.66	0.76	5.26
4	5.5	1380	82	82	81	0.69	0.8	0.85	8.827	1400	81	82.1	82.5	0.6	0.73	0.81	8.327

Fan and Exhaust Application Motors Aluminium Frame - Single Speed Improved Efficiency EFF2

Output		IEC Frame	Full load torque C_n (Nm)	Locked rotor current I_l/I_n	Locked rotor torque T_l/T_n	Break-down torque T_b/T_n	Inertia J kgm²	Allowable locked rotor time Hot/Cold (s)	Weight (kg)	Sound dB (A)	Rated speed (rpm)	400 V						Full load current I_n (A)
												% of full load						
												Efficiency η			Power Factor (Cos φ)			
kW	HP											50	75	100	50	75	100	
VI Pole - 1000 rpm																		
0.12	0.16	63	1.23	3.5	2.2	2.1	0.00067	41/90	8	43	910	42	50	54.5	0.46	0.55	0.65	0.489
0.18	0.25	71	1.94	3.3	2	2.2	0.00079	50/110	10.5	43	905	46	54	57	0.46	0.55	0.62	0.735
0.25	0.33	71	2.58	3.5	2.2	2.2	0.00096	43/95	11.5	43	900	53	60.5	64	0.4	0.5	0.57	0.989
0.37	0.5	80	3.78	4.5	2.5	2.5	0.00242	12/26	14	43	930	54	62.5	65	0.45	0.57	0.67	1.23
0.55	0.75	80	5.66	4.5	2.3	2.3	0.00311	10/22	15.5	43	930	60	65	67	0.5	0.63	0.73	1.62
0.75	1	90S/L	7.63	4.8	2.1	2.1	0.00504	16/35	20.8	45	920	70	72.6	72.4	0.54	0.67	0.76	1.97
1.1	1.5	90S/L	11.39	4.8	2.3	2.2	0.00672	14/31	23	45	925	71	75.2	75.2	0.5	0.64	0.75	2.82
1.5	2	100L	14.94	4.8	2.2	2.5	0.01121	18/40	29	44	940	74	77.3	77.5	0.53	0.66	0.74	3.78
2.2	3	112M	22.42	5	2.2	2.3	0.01682	14/31	34.5	48	940	77.5	80.5	80.1	0.53	0.66	0.74	5.36
3	4	132S	29.27	5.3	2	2.2	0.03489	20/44	55	52	960	80	82.7	82.5	0.58	0.7	0.77	6.82
4	5.5	132M	40.24	6	2.1	2.3	0.05039	18/40	65	52	960	83.6	85.5	85.8	0.59	0.7	0.77	8.74
5.5	7.5	132M	54.87	6.4	2.3	2.4	0.06202	14/31	73	52	960	84	85.8	85.8	0.54	0.66	0.74	12.5
HIGH-OUTPUT DESIGN																		
3	4	112M	29.27	6.3	2.6	2.6	0.02617	10/22	46	48	960	78.5	81.7	84	0.53	0.65	0.73	7.06
VIII Pole - 750 rpm																		
0.12	0.16	71	1.64	2.5	1.9	2.1	0.00079	44/97	10.7	41	685	36	44.2	47.2	0.4	0.49	0.56	0.655
0.18	0.25	80	2.51	3.1	1.9	2.1	0.00242	16/35	13.7	42	700	40	49	54.2	0.43	0.53	0.62	0.773
0.25	0.33	80	3.41	3	1.8	1.8	0.00294	21/46	14.8	42	680	47.5	55	57	0.45	0.56	0.65	0.974
0.37	0.5	90S/L	5.05	3.5	2.1	2.1	0.00448	29/64	18	43	695	51	59	61	0.43	0.53	0.64	1.37
0.55	0.75	90S/L	7.63	3.5	2.1	2.1	0.00616	21/46	21.5	43	690	57	63	65	0.45	0.56	0.65	1.88
0.75	1	100L	9.96	4.2	2	2.1	0.00952	30/66	27	50	705	65	70	71	0.42	0.54	0.63	2.42
1.1	1.5	100L	15.05	4.1	1.7	2.1	0.01289	23/51	30.5	50	700	66	71.5	72.2	0.43	0.56	0.65	3.38
1.5	2	112M	19.79	4.6	2.5	2.7	0.0243	32/70	43	46	710	76.5	77.8	78	0.48	0.6	0.69	4.02
2.2	3	132S	29.47	6.2	2.4	2.7	0.07527	23/51	67.5	48	715	78.5	81.5	82.5	0.53	0.65	0.73	5.27
3	4	132M	39.57	5.8	2.4	2.7	0.08531	22/48	75	48	710	78	82.7	83.5	0.52	0.64	0.72	7.2

Notes:
**Class "F" insulation with ΔT105K*
Standard voltage, connection and frequency: 220-240V Δ 50Hz 380-415V Δ 50Hz
380-415V Y 50Hz 660-690V Y 50Hz
The values shown are subject to change without prior notice. To obtain guaranteed values please access our website.

Fan and Exhaust Application Motors Aluminium Frame - Single Speed Improved Efficiency EFF2

Output		380 V								415 V							
		Rated speed (rpm)	% of full load						Full load current I_n (A)	Rated speed (rpm)	% of full load						Full load current I_n (A)
			Efficiency η			Power Factor (Cos φ)					Efficiency η			Power Factor (Cos φ)			
kW	HP		50	75	100	50	75	100			50	75	100	50	75	100	
VI Pole - 1000 rpm																	
0.12	0.16	900	45	52	55.5	0.49	0.58	0.68	0.483	915	39	48	53	0.43	0.52	0.62	0.508
0.18	0.25	895	49	55.5	57.5	0.49	0.59	0.65	0.732	910	43	52	56.5	0.44	0.52	0.59	0.751
0.25	0.33	890	56	63	65.3	0.44	0.55	0.61	0.954	905	50	58	62.5	0.37	0.46	0.54	1.03
0.37	0.5	920	56	64	66	0.49	0.62	0.72	1.18	935	52	61	64	0.42	0.54	0.64	1.26
0.55	0.75	920	62	65.8	68	0.54	0.67	0.77	1.6	935	58	64	66	0.47	0.59	0.68	1.7
0.75	1	910	71.5	72.8	71.5	0.58	0.71	0.79	2.02	930	68.5	72.4	72.4	0.5	0.64	0.73	1.97
1.1	1.5	915	72	75.5	74.8	0.55	0.69	0.78	2.86	935	70	75.2	75.2	0.46	0.61	0.72	2.83
1.5	2	930	75	77.5	77	0.58	0.7	0.76	3.89	950	73	77.3	77.6	0.5	0.63	0.71	3.79
2.2	3	930	79	80.8	79.7	0.58	0.7	0.76	5.52	950	76	80.3	80.5	0.5	0.63	0.72	5.28
3	4	132S	81	83	82	0.61	0.72	0.79	7.04	965	79	82.5	82.6	0.53	0.66	0.74	6.83
4	5.5	955	84.5	85.7	85.4	0.61	0.72	0.79	9.01	965	82.6	85.3	85.9	0.56	0.67	0.75	8.64
5.5	7.5	955	85	86.1	85.6	0.58	0.7	0.77	12.7	965	83	85.5	86	0.5	0.62	0.71	12.5
HIGH-OUTPUT DESIGN																	
3	4	955	80	82	83.9	0.59	0.7	0.76	7.15	965	76.5	81.4	84	0.48	0.6	0.69	7.2
VIII Pole - 750 rpm																	
0.12	0.16	675	40	48	50	0.44	0.52	0.6	0.608	695	32	40.5	45	0.37	0.47	0.53	0.7
0.18	0.25	690	43	52	54.5	0.45	0.56	0.65	0.772	710	37	46	53	0.41	0.5	0.59	0.80
0.25	0.33	670	50.5	56.5	56.5	0.48	0.59	0.69	0.974	690	45	53.5	56.5	0.42	0.53	0.61	1.01
0.37	0.5	685	54	61	62	0.46	0.56	0.67	1.35	700	48	57	60	0.4	0.5	0.6	1.43
0.55	0.75	680	59	64.5	65.5	0.48	0.59	0.69	1.85	700	55	61.5	64.5	0.41	0.52	0.61	1.94
0.75	1	695	67	71	70.5	0.46	0.58	0.66	2.45	710	63	69	70.5	0.38	0.5	0.6	2.47
1.1	1.5	690	68	72	72	0.47	0.6	0.68	3.41	710	64	70.5	72.2	0.4	0.52	0.62	3.42
1.5	2	700	77.5	78	77.7	0.52	0.63	0.7	4.19	715	74.5	77	78.1	0.46	0.58	0.66	4.05
2.2	3	132S	79.5	81.8	82.1	0.56	0.68	0.75	5.43	720	77.5	81.2	82.6	0.5	0.62	0.71	5.22
3	4	705	79.5	83	83	0.54	0.66	0.74	7.42	715	76.5	82.4	83.5	0.5	0.62	0.7	7.14

Fan and Exhaust Application Motors Aluminium Frame

Mechanical Data

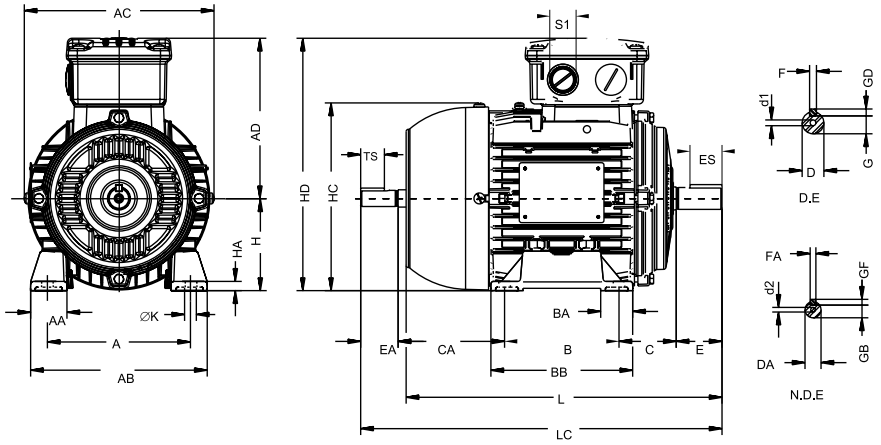

IEC FRAME	A	AA	AB	AC	AD	B	BA	BB	C	CA	SHAFT DIMENSIONS											H	HA	HC	HD	K	L	LC	S1	d1	d2	BEARINGS	
											D	E	ES	F	G	GD	DA	EA	TS	FA	GB	GF										D.E.	N.D.E.
63	100	19	116	125	113	80	23	95	40	78	11j6	23	14	4	8.5	4	9j6	20	12	3	7.2	3	63	6	124	176	6	216	241		EM4	EM3	6201-ZZ	
71	112	28	134	141	121	90	24.5	108	45	88	14j6	30	18	5	11	5	11j6	23	14	4	8.5	4	71		139	192		248	276	2xM20x1.5	DM5	EM4	6203-ZZ	6202-ZZ
80	125	32	155	159	130	100	28	124	50	93	19j6	40	28	6	15.5	6	14j6	30	18	5	11	5	80	8	157	210	10	276	313		DM6	DM4	6204-ZZ	6203-ZZ
90S/L	140	35	170	179	150	125	24	146	56	129 / 104	24j6	50	36	8	20	7	16j6	40	28		13		90	9	177	240		330	375	2xM25x1.5	DM8	DM6	6205-ZZ	6204-ZZ
100L	160	40	196	200	160	140	30	170	63	118	28j6	60	45		24		22j6	50	36	6	18.5	6	100	12	198	260	12	376	431		DM10	DM8	6206-ZZ	6205-ZZ
112M	190	46	220	223	180		50		70	128							24j6			8	20	7	112		235	292		393	448	2xM32x1.5			6307-ZZ	6206-ZZ
132S	216	44	248	270	207		40		89	150	38k6	80	63	10	33	8	28j6	60	45		24		132		274	339		490	557		DM12	DM10	6308-ZZ	6207-ZZ
132M						178	32	210																									

IEC FRAME	"FF" FLANGE DIMENSIONS									N° OF HOLES
	FLANGE	C	LA	M	N	P	T	S	α	
63	FF-115	40	9	115	95	140	3	10	45°	4
71	FF-130	45		130	110	160	3.5			
80	FF-165	50	10	165	130	200		12		
90S/L		56								
100L	FF-215	63	11	215	180	250	4	15		
112M		70								
132S/M	FF-265	89	12	265	230	300				

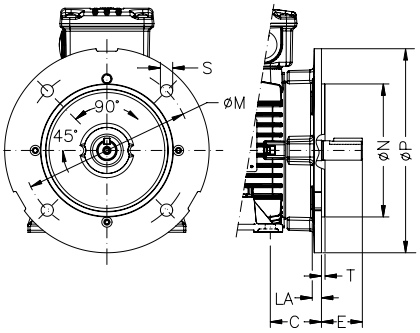

IEC FRAME	"C" DIN FLANGE DIMENSIONS							N° OF HOLES
	FLANGE	C	M	N	P	S	T	
63	C--90	40	75	60	90	M5	2.5	4
71	C-105	45	85	70	105	M6		
80	C-120	50	100	80	120		3	
90S/L	C-140	56	115	95	140	M8		
100L	C-160	63	130	110	160		3.5	
112M		70						
132S/M	C-200	89	165	130	200	M10		

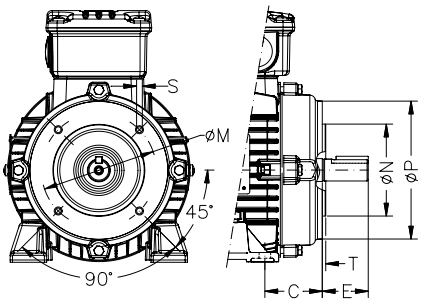

Fan and Exhaust Application Motors Aluminium Frame

Mechanical Data

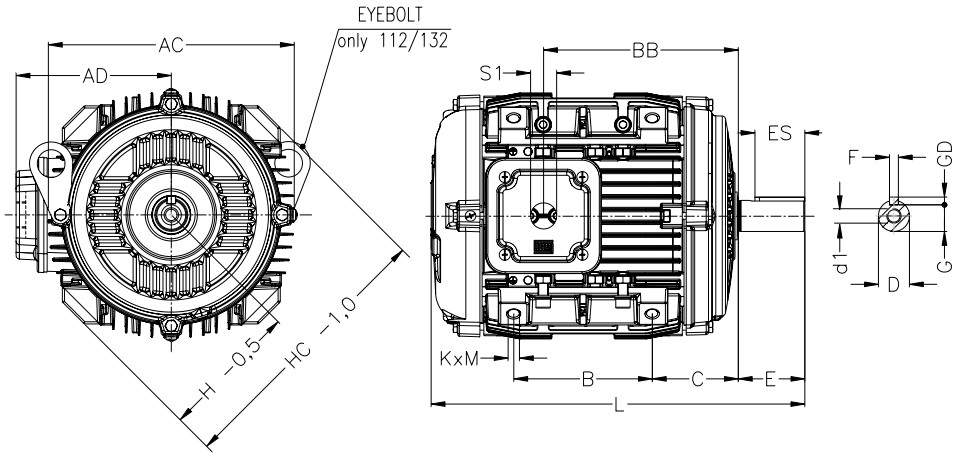

IEC FRAME	AC	AD	B	BB	C	SHAFT DIMENSIONS						H	HC	L	d1	S1		KxM	BEARINGS	
						D	E	ES	F	G	GD								D.E.	N.D.E.
63	125	83	63	87,5	48.5	11j6	23	14	4	8.5	4	75	150	182	EM4	M20x1.5	NPT1/2”	M8x1.25x15	6201-ZZ	6201-ZZ
71	140	91	71	106	54.5	14k6	30	18	5	11	5	80	160	207	DM5				6203-ZZ	6202-ZZ
80	158	102	80	122	60	19j6	40	28	6	15.5	6	95	190	238	DM6			M12x1.75x22	6204-ZZ	6203-ZZ
90S/L	178	112	90	156	86	24j6	50	36	8	20	7	105	210	285	DM8		NPT3/4”		6205-ZZ	6204-ZZ
100L	198	122	125	179	70.5	28j6	60	45	8	24		112.5	225	323	DM10	M25x1.5			6206-ZZ	6205-ZZ
112M	223	139		175,5	77.5							125	250	338					6307-ZZ	6206-ZZ
132M	270	167		239,5	123	38k6	80	63	10	33	8	150	300	432	DM12		NPT1”	M16x2x25	6308-ZZ	6207-ZZ

Smoke Extraction Motors Aluminium Frame Improved Efficiency EFF2

Standard Features:

- Three-phase, multivoltage, IP55, TEFC
- Output: 0.15 up to 330kW
- Frames: 80 up to 355M/L
- Voltage: 220-240/380-415V (up to 100L)
  380-415/660V (from 112M and up)
- Class “F” insulation (ΔT=80K)
- Continuous duty: S1
- Design N
- Ambient temperature: 40°C, at 1000 m.a.s.l.
- Squirrel cage rotor/Aluminium die cast
- Enclosure: TEFC or TEAO
- Pad mounted model:
  frame sizes 80 up to 250 (132M/L and 180M are not available)
- Foot mounted model: frame sizes 80 up to 355
- Construction form: B3 (B30 for Pad Mounted Motors)
- Labyrinth seals (except 200°C/2 hours motors)
- Krytox (Except 200ºC/2 hours motor)
- Drain Plug
- One meter long flying leads for pad mounted motors (without terminal box)
- Regreasing Nipple for frame:
  160 and up (300ºC/1 hour and 400ºC/2 hours)
  225 and up (200ºC/2 hours
- Painting provided with modified Phenolic Resin
- Color - Aluminium

Options available, on request.

Typical Applications:

These motors are used where a large concentration of people in commercial and industrial facilities is present:

- Large buildings,
- Shopping malls,
- Factories,
- Warehouses,
- Enclosed parking lots
- Other ventilation systems

	F200	F300	F400
Service	S1 - 40ºC	S1 - 40ºC	S1 - 40ºC
	S2* - 200ºC - 2 hours	S2* - 300ºC - 1 hour	S2* - 400ºC - 2 hours
Certification	BSRIA - U.K. Frames: 132 to 280	BSRIA - U.K. Frames: 80 to 250 Also avaiable certification for 300º C/2 hours	BSRIA - U.K. Frames: 80 to 180
			CTICM - France Frames: 90 to 280
			Pole: IV, VI, VIII, VI/IV, VII/Vpoles
Insulation Class	Ins. Class F; Temp. Rise 80K	Ins. Class H; Temp. Rise 80K or 105K	
Standard	EM 12101-3		
Pole / Frame Sizes	II, IV/II pole (frame sizes 80 up to 250)		
available	IV, VI, VIII/IV, VI/IV pole (frame sizes 80 up to 355M/L)		
Construction	TEFC or TEAO (Foot or flange mounted / pad mounted for frame sizes 80 up to 250)		

Bearings
WEG motors are fitted with the highest quality bearings selected from the best manufacturers in the world and designed to ensure long life of the motor even under heavy operating conditions. For motors supplied with high temperature grease, bearings are designed to meet critical operating conditions. WEG uses Krytox Grease that provides protection from rusting, high-temperature corrosion and antiwear. Krytox allows extended lubrication intervals.

Nameplate
Stainless steel nameplate ensuring a permanent record of all motor data.

Winding
The insulation system of the winding has been specially selected and tested to ensure that it will withstand the extreme temperature during the emergency period. The windings are impregnated with dipping and baking process (frames 80 up to 200L) and continuous resin flow process (frames 225S/M up to 355M/L). For 300°C/1hour and 400°C/2 hours motors WEG uses special wire and special varnish impregnation.

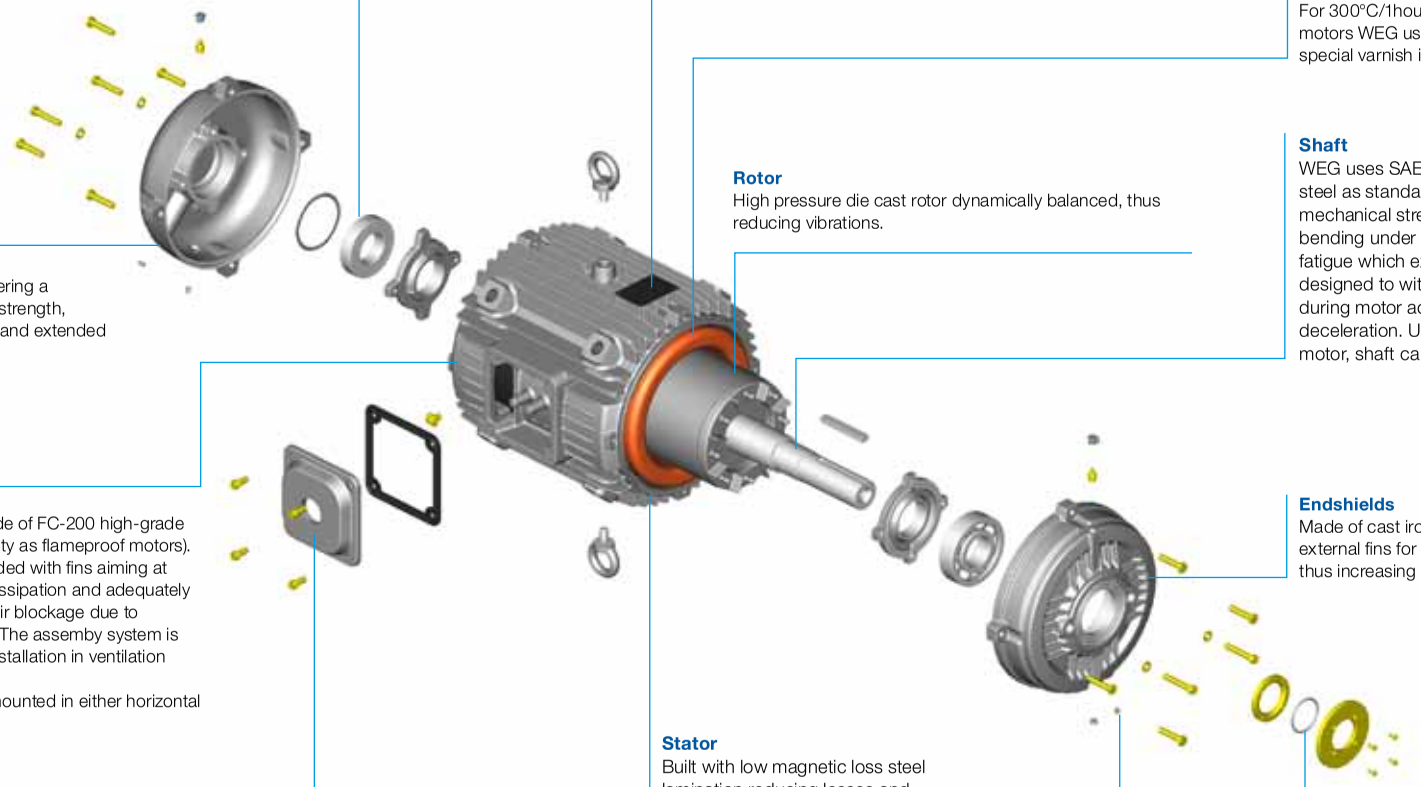

Endshield
Made of cast iron offering a superior mechanical strength, corrosion-resistance and extended lifetime.

Rotor
High pressure die cast rotor dynamically balanced, thus reducing vibrations.

Shaft
WEG uses SAE/AISI 1040/45 carbon steel as standard, which provides high mechanical strength, preventing bending under load and minimizes fatigue which extends lifetime. Specially designed to withstand torques caused during motor acceleration and deceleration. Upon special design motor, shaft can have second shaft end.

Frame
WEG motors are made of FC-200 high-grade cast iron (same density as flameproof motors). The frames are provided with fins aiming at improving the heat dissipation and adequately spaced to minimize air blockage due to accumulation of dirt. The assemby system is prepared for direct installation in ventilation ducts.
The motors can be mounted in either horizontal or vertical positions.

Endshields
Made of cast iron, they are provided with external fins for better heat dissipation, thus increasing bearing life.

Stator
Built with low magnetic loss steel lamination reducing losses and operating temperature.

Seals
WEG motors (300°C/2 hours and 400°C/2 hours) are fitted with Taconite Labyrinth seals to provide a good protection in dusty and high moisture environments.

Terminal Box
Motor supplied with terminal box base and extended leads (1 meter) allowing lead connection outside of the duct. Loose terminal box and longer power supply leads can also be supplied.

Drain Hole
Provided with plastic drain plug allowing drainage of condensed water.

Smoke Extraction Motors Aluminium Frame - Single Speed - 200^{0}C/2 hours
Improved Efficiency EFF2

Output		IEC Frame	Full load torque C_n (Nm)	Locked rotor current I_r/I_n	Locked rotor torque T_r/T_n	Break-down torque T_b/T_n	Inertia J kgm^2	Allowable locked rotor time Hot/Cold (s)	Weight (kg)	Sound dB (A)	Rated speed (rpm)	400 V						Full load current I_n (A)
												% of full load						
												Efficiency η			Power Factor (Cos φ)			
kW	HP											50	75	100	50	75	100	
II Pole - 3000 rpm																		
0.75	1	80	2.52	5.8	2.9	3.1	0.00079	25/55	14	59	2790	76.0	80.0	79.5	0.76	0.84	0.87	1.57
1.1	1.5	80	3.75	6.0	3.0	2.9	0.00090	13/29	15	59	2810	77.1	80.2	79.7	0.69	0.80	0.86	2.32
1.5	2	90S	4.89	6.8	2.8	3.0	0.00205	14/31	20	68	2870	81.4	83.7	83.6	0.71	0.81	0.86	3.01
2.2	3	90L	7.42	6.6	2.8	3.0	0.00242	9/20	22	68	2840	82.2	83.7	83.4	0.69	0.80	0.85	4.48
3	4	100L	9.76	7.2	2.6	2.8	0.00616	9/20	31	67	2880	83.2	85.7	85.6	0.77	0.85	0.88	5.75
4	5.5	112M	13.4	7.6	2.7	3.1	0.00842	15/33	42	64	2890	85.0	87.5	87.5	0.76	0.84	0.88	7.50
5.5	7.5	132S	18.0	8.0	2.7	3.2	0.02056	18/40	61	68	2935	84.0	87.1	88.3	0.73	0.82	0.87	10.3
7.5	10	132S	24.0	7.3	2.5	2.9	0.02430	10/22	67	68	2925	86.5	88.9	89.2	0.77	0.86	0.89	13.6
11	15	160M	35.8	8.3	2.6	3.1	0.04706	12/26	104	70	2945	87.8	90.1	90.3	0.77	0.85	0.88	20.0
15	20	160M	47.7	7.8	2.5	3.2	0.05295	10/22	111	70	2945	89.6	91.1	91.2	0.76	0.84	0.88	27.0
18.5	25	160L	59.6	8.2	2.6	3.3	0.06471	10/22	126	70	2945	90.4	91.9	91.7	0.77	0.85	0.88	33.1
22	30	180M[1)]	71.4	8.2	2.8	3.1	0.11351	13/29	172	70	2950	90.5	92.1	92.1	0.78	0.86	0.89	38.7
30	40	200L	94.8	7.5	2.8	2.8	0.20630	19/42	239	74	2965	90.0	92.0	92.7	0.77	0.85	0.88	53.1
37	50	200L	118	7.6	2.9	2.9	0.22424	19/42	253	74	2965	91.3	92.8	93.0	0.75	0.84	0.88	65.3
45	60	225S/M	142	7.9	2.6	3.5	0.44846	24/53	414	78	2965	91.6	93.3	93.6	0.85	0.89	0.91	76.3
55	75	250S/M	178	8.5	2.8	3.0	0.50227	15/33	454	78	2960	91.8	93.5	93.8	0.85	0.89	0.91	93.0
HIGH-OUTPUT DESIGN																		
1.5	2	80	5.07	6.0	3.0	2.7	0.00096	10/22	16	59	2770	77.0	78.5	77.7	0.70	0.82	0.87	3.20
2.2	3	90S	7.39	7.0	3.0	3.2	0.00230	8/18	21	68	2850	81.5	83.0	83.1	0.64	0.77	0.84	4.55
3	4	90L*	9.93	6.2	3.2	3.1	0.00266	6/13	24	68	2830	81.0	82.0	82.0	0.55	0.68	0.78	6.77
4	5.5	100L	13.5	7.5	2.9	3.1	0.00672	7/15	33	67	2870	81.0	82.3	82.5	0.72	0.81	0.86	8.14
5.5	7.5	112M	18.4	7.7	2.5	3.0	0.00995	10/22	45	64	2870	86.5	87.5	87.5	0.80	0.87	0.90	10.1
7.5	10	112M*	24.8	7.1	2.7	3.0	0.00995	8/18	45	64	2830	86.0	87.0	87.0	0.73	0.83	0.88	14.1
11	15	132M	36.0	7.2	2.4	3.2	0.03178	13/29	79	68	2925	90.0	90.6	90.2	0.76	0.84	0.88	20.0
22	30	160L*	71.9	7.5	2.5	3.0	0.06766	6/13	132	70	2930	90.0	90.6	90.7	0.72	0.82	0.86	40.7
30	40	180L*	95.4	8.7	2.5	3.1	0.13622	9/20	197	70	2945	92.0	92.7	92.7	0.74	0.83	0.87	53.7
IV Pole - 1500 rpm																		
0.55	0.75	80	3.68	6.0	2.6	2.8	0.00242	17/37	14	44	1430	69.0	73.0	75.0	0.56	0.69	0.78	1.36
0.75	1	80	4.96	5.5	2.4	2.6	0.00294	14/31	15	44	1415	73.5	76.2	76.2	0.62	0.74	0.83	1.71
1.1	1.5	90S	7.32	6.5	3.0	3.0	0.00504	13/29	21	47	1440	76.0	80.0	80.6	0.57	0.69	0.78	2.53
1.5	2	90L	9.89	6.2	2.7	2.7	0.00672	12/26	24	47	1420	80.3	82.0	81.7	0.64	0.77	0.83	3.19
2.2	3	100L	14.8	6.7	2.7	2.9	0.00842	14/31	30	51	1420	81.0	82.3	83.0	0.65	0.78	0.83	4.61
3	4	100L	19.9	6.5	2.7	2.7	0.00995	10/22	33	51	1410	83.6	85.0	84.7	0.68	0.79	0.86	5.94
4	5.5	112M	27.0	7.5	2.7	2.8	0.01875	12/26	47	55	1430	86.0	87.4	87.1	0.70	0.81	0.87	7.62
5.5	7.5	132S	36.0	8.0	2.4	3.0	0.04652	11/24	61	58	1465	85.4	87.7	88.5	0.68	0.79	0.85	10.6
7.5	10	132M	48.0	8.0	2.5	2.8	0.05427	8/18	69	58	1465	86.4	88.4	88.6	0.70	0.80	0.86	14.2
11	15	160M	72.4	6.0	2.2	2.5	0.08029	16/35	106	62	1455	87.6	89.4	89.9	0.70	0.79	0.84	21.0
15	20	160L	96.6	6.0	2.2	2.4	0.10037	13/29	121	62	1455	89.0	90.4	90.6	0.71	0.80	0.84	28.4
18.5	25	180M1)	119	7.0	2.7	2.8	0.17939	18/40	174	64	1470	89.8	91.5	92.1	0.68	0.79	0.84	34.5
22	30	180L	143	7.5	2.8	2.8	0.19733	14/31	185	64	1470	91.0	92.2	92.4	0.67	0.78	0.83	41.4
30	40	200L	190	6.5	2.2	2.5	0.33095	17/37	248	67	1475	91.8	93.0	93.0	0.75	0.82	0.85	54.8
37	50	225S/M	237	7.2	2.3	2.7	0.62988	20/44	347	70	1480	91.2	92.2	92.8	0.76	0.85	0.88	65.4
45	60	225S/M	286	7.0	2.3	2.7	0.76985	16/35	379	70	1475	91.0	92.9	93.5	0.76	0.85	0.88	78.9
55	75	250S/M	357	7.5	2.3	2.6	0.97981	16/35	446	70	1475	92.7	93.1	93.4	0.80	0.87	0.90	94.4
75	100	280S/M	473	6.7	2.1	2.4	2.32858	44/97	720	74	1485	92.4	93.8	94.3	0.83	0.88	0.90	128
90	125	280S/M	591	7.1	2.4	2.5	2.56947	31/68	756	74	1485	92.3	93.9	94.2	0.82	0.87	0.89	155
110	150	315S/M	709	7.1	2.3	2.6	2.81036	27/59	857	77	1485	92.8	94.4	94.4	0.78	0.85	0.88	191
132	175	315S/M	828	7.3	2.5	2.6	3.77391	31/68	1007	77	1485	93.3	94.7	95.1	0.78	0.85	0.88	228
160	220	315S/M	1044	7.0	2.4	2.7	3.77391	22/48	994	77	1480	93.3	95.1	95.5	0.78	0.85	0.87	278
200	270	355M/L	1273	6.6	2.3	2.2	7.45663	44/97	1525	79	1490	94.0	95.0	95.2	0.82	0.86	0.88	345
250	340	355M/L	1603	6.9	2.2	2.5	8.38871	36/79	1651	79	1490	94.3	95.2	95.8	0.80	0.86	0.88	428
315	430	355M/L	2027	6.7	2.2	2.4	10.2529	42/92	1835	79	1490	94.8	95.9	96.2	0.79	0.86	0.89	531
330	450	355M/L	2121	6.5	2.3	2.3	11.1850	32/70	1865	79	1490	95.0	96.0	96.2	0.83	0.88	0.90	550
HIGH-OUTPUT DESIGN																		
1.1	1.5	80	7.61	5.0	2.3	2.3	0.00328	10/22	15	44	1385	65.0	68.5	69.0	0.55	0.70	0.81	2.84
1.5	2	90S	10.0	5.8	2.6	2.6	0.00504	8/18	21	47	1405	73.0	75.0	76.2	0.62	0.76	0.82	3.46
2.2	3	90L*	14.9	5.8	2.7	2.5	0.00672	8/18	24	47	1410	75.0	76.5	76.5	0.57	0.71	0.80	5.19
5.5	7.5	112M*	36.3	6.5	2.5	2.6	0.01875	8/18	47	55	1450	84.0	85.7	85.7	0.54	0.66	0.75	12.4
7.5	10	132S	48.0	8.0	2.5	2.8	0.05427	8/18	63	58	1465	86.4	88.4	88.6	0.70	0.80	0.86	14.2
11	15	132M/L*2)	72.4	7.5	2.4	2.7	0.06978	5/11	82	58	1455	87.0	88.4	88.0	0.70	0.81	0.88	20.5
15	20	160M	96.6	6.0	2.2	2.4	0.10037	13/29	119	62	1455	89.0	90.4	90.6	0.71	0.80	0.84	28.4
18.5	25	160L*	121	6.0	2.4	2.4	0.11542	12/26	128	62	1455	88.5	90.0	90.0	0.64	0.76	0.82	36.2
22	30	180M1)	143	7.5	2.8	2.8	0.19733	14/31	183	64	1470	91.0	92.2	92.4	0.67	0.78	0.83	41.4
30	40	200M	190	6.5	2.2	2.5	0.33095	17/37	233	67	1475	91.8	93.0	93.0	0.75	0.82	0.85	54.8
37	50	200L	239	7.0	2.3	2.5	0.38611	14/31	269	67	1470	91.5	92.5	92.3	0.73	0.82	0.86	67.3
55	75	225S/M	357	7.5	2.3	2.6	0.97981	16/35	423	70	1475	92.7	93.1	93.4	0.80	0.87	0.90	94.4
75	100	250S/M	475	7.2	2.4	2.6	1.15478	12/26	488	70	1480	92.5	93.6	93.7	0.77	0.85	0.87	133
110	150	280S/M	709	7.1	2.3	2.6	2.81036	27/59	793	77	1485	92.8	94.4	94.4	0.78	0.85	0.88	191
132	175	280S/M	828	7.5	2.3	2.6	3.37243	13/29	940	74	1485	93.0	94.0	94.6	0.78	0.85	0.88	229
200	270	315S/M*	1281	6.7	2.3	2.6	3.77391	17/37	1011	77	1480	94.2	94.8	95.4	0.74	0.82	0.85	356

Notes:
**Class "F" insulation with ΔT105K*
Standard voltage, connection and frequency: 220-240V Δ 50Hz
380-415V Δ 50Hz
380-415V Y 50Hz
660-690V Y 50Hz
The values shown are subject to change without prior notice. To obtain guaranteed values please access our website.

Smoke Extraction Motors Aluminium Frame - Single Speed - 200°C/2 hours Improved Efficiency EFF2

Output		380 V								415 V							
		Rated speed (rpm)	% of full load						Full load current I_n (A)	Rated speed (rpm)	% of full load						Full load current I_n (A)
			Efficiency η			Power Factor (Cos φ)					Efficiency η			Power Factor (Cos φ)			
kW	HP		50	75	100	50	75	100			50	75	100	50	75	100	
II Pole - 3000 rpm																	
0.75	1	2770	76.5	79.7	78.5	0.79	0.86	0.89	1.63	2810	75.5	80.1	80.0	0.73	0.82	0.86	1.52
1.1	1.5	2790	78.2	80.4	79.3	0.74	0.84	0.88	2.39	2825	76.0	79.8	79.8	0.64	0.76	0.84	2.28
1.5	2	2855	81.8	83.8	83.0	0.75	0.84	0.88	3.12	2880	80.0	83.7	83.8	0.67	0.78	0.84	2.96
2.2	3	2820	82.8	83.6	83.3	0.75	0.84	0.87	4.61	2850	81.5	83.6	84.3	0.64	0.76	0.83	4.37
3	4	2870	83.5	85.6	85.1	0.80	0.86	0.89	6.02	2890	82.8	85.6	85.6	0.74	0.84	0.87	5.60
4	5.5	2880	85.5	87.5	87.2	0.80	0.86	0.89	7.83	2900	84.5	87.4	88.2	0.72	0.82	0.87	7.25
5.5	7.5	2930	84.5	87.5	88.2	0.77	0.85	0.89	10.6	2940	83.5	86.8	88.2	0.69	0.80	0.85	10.2
7.5	10	2915	87.0	89.0	88.8	0.81	0.87	0.90	14.3	2930	86.0	88.8	89.3	0.73	0.83	0.87	13.4
11	15	2940	88.3	90.1	90.2	0.80	0.86	0.89	20.8	2950	87.3	90.0	90.4	0.74	0.83	0.87	19.5
15	20	2935	90.1	91.2	91.0	0.81	0.87	0.89	28.1	2950	89.1	91.0	91.2	0.72	0.81	0.87	26.3
18.5	25	2940	90.7	92.0	91.5	0.81	0.87	0.89	34.5	2950	90.1	91.8	92.0	0.73	0.83	0.86	32.5
22	30	2945	91.0	92.1	92.0	0.82	0.88	0.90	40.4	2955	90.0	92.0	92.1	0.75	0.84	0.87	38.2
30	40	2960	90.5	92.1	92.6	0.80	0.87	0.89	55.3	2970	89.5	91.8	92.7	0.73	0.83	0.87	51.8
37	50	2960	91.7	93.0	93.0	0.80	0.87	0.89	67.9	2965	90.8	92.6	93.0	0.70	0.81	0.86	64.4
45	60	2960	91.9	93.4	93.5	0.86	0.9	0.92	79.5	2970	91.5	93.3	93.9	0.84	0.88	0.9	74.1
55	75	2960	91.8	93.2	93.5	0.87	0.91	0.92	97.1	2965	91.6	93.5	94	0.83	0.88	0.91	89.5
HIGH-OUTPUT DESIGN																	
1.5	2	2750	78.0	78.5	76.5	0.75	0.85	0.89	3.35	2790	76.0	78.5	78.5	0.65	0.78	0.85	3.13
2.2	3	2830	82.3	83.3	83.0	0.71	0.82	0.87	4.63	2860	80.2	82.5	83.1	0.58	0.72	0.80	4.60
3	4	2800	82.0	82.5	81.5	0.61	0.74	0.81	6.90	2845	80.0	81.5	81.5	0.50	0.64	0.74	6.92
4	5.5	2850	81.5	82.5	82.0	0.77	0.84	0.88	8.42	2890	80.3	82.0	82.5	0.68	0.78	0.84	8.03
5.5	7.5	2860	87.0	87.5	87.2	0.83	0.89	0.91	10.5	2880	86.0	87.5	87.7	0.77	0.85	0.89	9.80
7.5	10	2815	86.5	87.0	86.5	0.79	0.87	0.90	14.6	2840	85.5	87.0	87.0	0.68	0.80	0.86	13.9
11	15	2920	89.5	90.8	90.2	0.80	0.87	0.90	20.6	2930	89.3	90.5	90.2	0.72	0.82	0.86	19.7
22	30	2925	90.5	90.7	90.5	0.77	0.85	0.88	42.0	2935	89.5	90.5	90.7	0.68	0.79	0.84	40.2
30	40	2940	92.0	92.3	92.3	0.78	0.84	0.88	56.1	2950	92.0	92.7	92.7	0.71	0.80	0.85	53.0
IV Pole - 1500 rpm																	
0.55	0.75	1420	70.0	73.5	75.0	0.61	0.73	0.81	1.38	1440	67.0	72.5	74.6	0.53	0.66	0.75	1.37
0.75	1	1400	75.0	76.5	76.0	0.66	0.78	0.85	1.76	1430	72.0	76.0	76.2	0.59	0.71	0.81	1.69
1.1	1.5	1420	77.5	80.5	80.5	0.63	0.74	0.81	2.56	1445	74.5	79.0	80.3	0.53	0.64	0.74	2.58
1.5	2	1410	81.2	82.2	81.0	0.68	0.80	0.85	3.31	1430	79.3	81.5	81.8	0.61	0.74	0.81	3.15
2.2	3	1410	81.5	82.0	81.7	0.69	0.81	0.85	4.81	1430	80.5	82.3	83.0	0.61	0.75	0.81	4.55
3	4	1400	84.0	84.9	84.2	0.72	0.82	0.87	6.22	1420	83.2	85.1	84.9	0.65	0.77	0.84	5.85
4	5.5	1420	86.5	87.5	86.7	0.74	0.84	0.89	7.88	1440	85.2	87.2	86.7	0.67	0.78	0.84	7.64
5.5	7.5	1460	86.7	88.3	88.3	0.73	0.82	0.87	10.9	1470	84.2	87.0	88.4	0.64	0.75	0.83	10.4
7.5	10	1465	87.0	88.6	88.4	0.75	0.84	0.88	14.6	1470	85.6	88.0	88.6	0.65	0.77	0.83	14.2
11	15	1450	88.3	89.6	89.2	0.74	0.82	0.85	22.0	1460	86.8	89.0	89.8	0.65	0.76	0.82	20.8
15	20	1450	89.5	90.5	90.1	0.75	0.83	0.86	29.4	1460	88.4	90.3	90.6	0.67	0.78	0.83	27.8
18.5	25	1465	90.3	91.7	91.7	0.72	0.81	0.85	36.1	1470	89.3	91.3	92.1	0.65	0.76	0.82	34.1
22	30	1465	91.5	92.4	92.3	0.72	0.81	0.85	42.6	1475	90.5	92.0	92.5	0.63	0.75	0.81	40.8
30	40	1470	92.2	93.0	92.6	0.78	0.84	0.86	57.2	1480	91.5	93.0	93.2	0.72	0.80	0.84	53.3
37	50	1475	91.6	92.4	92.5	0.79	0.86	0.89	68.3	1480	90.8	92.1	92.9	0.72	0.83	0.87	63.7
45	60	1475	91.3	92.8	93.5	0.80	0.87	0.89	82.2	1480	91.0	92.9	93.5	0.72	0.83	0.87	77.0
55	75	1475	92.8	93.5	93.4	0.83	0.88	0.91	98.3	1480	92.5	93.4	93.6	0.77	0.85	0.89	91.9
75	100	1480	92.8	93.9	94.2	0.85	0.89	0.90	134	1485	92.2	93.8	94.3	0.81	0.87	0.89	124
90	125	1480	92.6	94.1	94.2	0.84	0.88	0.90	161	1485	92.0	93.9	94.2	0.80	0.86	0.89	149
110	150	1480	92.8	93.6	94.2	0.80	0.86	0.88	202	1485	92.8	94.4	94.5	0.76	0.83	0.87	186
132	175	1480	93.5	94.9	95.1	0.81	0.86	0.89	237	1485	93.3	94.7	95.1	0.76	0.84	0.87	222
160	220	1480	93.0	95.0	95.4	0.81	0.86	0.88	290	1485	94.2	95.1	95.5	0.77	0.84	0.87	268
200	270	1485	94.2	95.0	95.1	0.84	0.87	0.89	359	1490	93.8	94.9	95.1	0.80	0.85	0.87	336
250	340	1485	94.5	95.2	95.7	0.82	0.87	0.89	446	1490	94.1	95.0	95.7	0.77	0.85	0.87	418
315	430	1485	95.0	95.8	96.1	0.83	0.87	0.89	560	1490	94.5	95.8	96.2	0.76	0.84	0.88	518
330	450	1485	95.2	96.0	96.1	0.85	0.89	0.90	580	1490	94.8	95.8	96.2	0.81	0.87	0.89	536
HIGH-OUTPUT DESIGN																	
1.1	1.5	1370	68.0	69.0	69.5	0.61	0.76	0.86	2.80	1400	60.0	66.0	67.0	0.50	0.65	0.76	3.01
1.5	2	1385	72.0	74.0	75.0	0.68	0.80	0.85	3.57	1410	73.0	74.5	75.5	0.58	0.72	0.80	3.45
2.2	3	1390	76.0	77.0	76.0	0.65	0.75	0.83	5.30	1420	73.0	76.0	76.5	0.53	0.66	0.76	5.26
5.5	7.5	1445	85.0	86.0	85.7	0.60	0.72	0.79	12.3	1455	82.0	85.7	85.7	0.49	0.62	0.71	12.6
7.5	10	1465	87.0	88.6	88.4	0.75	0.84	0.88	14.6	1470	85.6	88.0	88.6	0.65	0.77	0.83	14.2
11	15	1450	87.5	88.4	87.7	0.75	0.84	0.89	21.4	1460	86.5	88.4	88.4	0.67	0.79	0.86	20.1
15	20	1450	89.5	90.5	90.1	0.75	0.83	0.86	29.4	1460	88.4	90.3	90.6	0.67	0.78	0.83	27.8
18.5	25	1450	89.0	90.0	89.4	0.70	0.80	0.84	37.4	1460	88.0	90.0	90.0	0.60	0.73	0.80	35.7
22	30	1465	91.5	92.4	92.3	0.72	0.81	0.85	42.6	1475	90.5	92.0	92.5	0.63	0.75	0.81	40.8
30	40	1470	92.2	93.0	92.6	0.78	0.84	0.86	57.2	1480	91.5	93.0	93.2	0.72	0.80	0.84	53.3
37	50	1465	92.0	92.5	92.0	0.77	0.84	0.87	70.2	1475	91.0	92.5	92.5	0.69	0.80	0.85	65.5
55	75	1475	92.8	93.5	93.4	0.83	0.88	0.91	98.3	1480	92.5	93.4	93.6	0.77	0.85	0.89	91.9
75	100	1475	92.6	93.4	93.5	0.80	0.86	0.88	138	1480	92.6	93.7	93.6	0.74	0.84	0.87	128
110	150	1480	92.8	93.6	94.2	0.80	0.86	0.88	202	1485	92.8	94.4	94.5	0.76	0.83	0.87	186
132	175	1480	92.5	93.5	93.5	0.81	0.86	0.89	241	1485	92.2	94.7	94.7	0.76	0.84	0.87	223
200	270	1480	94.5	95.0	95.4	0.78	0.84	0.86	370	1485	93.8	94.6	95.4	0.70	0.80	0.84	347

[1)]For Pad Mounted, please consider frame size 180L.
[2)]Frame size 132M/L is not available for Pad Mounted.
For Pad Mounted version frame sizes up to 250S/M.

Smoke Extraction Motors Aluminium Frame - Single Speed - 200^{0}C/2 hours Improved Efficiency EFF2

Output		IEC Frame	Full load torque C_n (Nm)	Locked rotor current I_r/I_n	Locked rotor torque T_r/T_n	Break-down torque T_b/T_n	Inertia J kgm^2	Allowable locked rotor time Hot/Cold (s)	Weight (kg)	Sound dB (A)	Rated speed (rpm)	400 V						Full load current I_n (A)
												% of full load						
												Efficiency η			Power Factor (Cos φ)			
kW	HP											50	75	100	50	75	100	
VI Pole - 1000 rpm																		
0.25	0.33	80	2.44	4.6	2.5	2.9	0.00225	19/42	14	43	950	52.0	60.0	64.0	0.44	0.55	0.65	0.867
0.37	0.5	80	3.78	4.5	2.5	2.5	0.00242	12/26	14	43	930	54.0	62.5	65.0	0.45	0.57	0.67	1.23
0.55	0.75	80	5.66	4.5	2.3	2.3	0.00311	10/22	15	43	930	60.0	65.0	67.0	0.50	0.63	0.73	1.62
0.75	1	90S	7.63	4.8	2.1	2.1	0.00504	16/35	20	45	920	70.0	72.6	72.4	0.54	0.67	0.76	1.97
1.1	1.5	90L	11.4	4.8	2.3	2.2	0.00672	14/31	24	45	925	71.0	75.2	75.2	0.50	0.64	0.75	2.82
1.5	2	100L	14.9	4.8	2.2	2.5	0.01121	18/40	27	44	940	74.0	77.3	77.5	0.53	0.66	0.74	3.78
2.2	3	112M	22.4	5.0	2.2	2.3	0.01682	14/31	38	48	940	77.5	80.5	80.1	0.53	0.66	0.74	5.36
3	4	132S	29.3	5.3	2.0	2.2	0.03489	20/44	52	52	960	80.0	82.7	82.5	0.58	0.70	0.77	6.82
4	5.5	132M	40.2	6.0	2.1	2.3	0.05039	18/40	66	52	960	83.6	85.5	85.8	0.59	0.70	0.77	8.74
5.5	7.5	132M	54.9	6.4	2.2	2.4	0.06202	14/31	73	52	960	84.0	85.8	85.8	0.56	0.68	0.76	12.2
7.5	10	160M	72.4	6.1	2.3	2.6	0.12209	17/37	105	56	970	87.0	88.2	88.0	0.62	0.74	0.81	15.2
11	15	160L	109	6.6	2.4	2.9	0.17595	13/29	130	56	970	87.2	88.3	88.3	0.62	0.75	0.82	21.9
15	20	180L	146	7.5	2.5	2.6	0.30337	11/24	182	56	965	89.1	90.1	89.8	0.82	0.88	0.91	26.5
18.5	25	200L	180	6.0	2.3	2.5	0.37670	33/73	232	58	975	89.3	90.5	89.9	0.70	0.79	0.84	35.4
22	30	200L	216	6.0	2.3	2.4	0.41258	33/73	241	58	975	89.0	90.9	91.3	0.70	0.79	0.84	41.4
30	40	225S/M	285	7.2	2.6	2.7	0.98842	20/44	367	61	985	90.5	91.8	91.8	0.77	0.84	0.87	54.2
37	50	250S/M	358	7.5	2.7	2.6	1.22377	18/40	429	61	980	90.0	92.4	92.5	0.76	0.84	0.87	66.4
45	60	280S/M	428	6.8	2.4	2.6	2.29824	24/53	599	66	985	90.5	92.3	92.6	0.68	0.78	0.83	84.5
55	75	280S/M	535	6.5	2.3	2.5	2.64298	23/51	637	66	985	91.6	93.2	93.5	0.71	0.82	0.85	100
75	100	315S/M	713	6.7	2.3	2.5	3.44737	20/44	788	69	985	91.6	93.5	93.7	0.71	0.81	0.85	136
90	125	315S/M	891	6.3	2.1	2.3	3.67719	18/40	813	69	985	92.5	94.0	93.9	0.73	0.81	0.85	163
110	150	315S/M	1070	6.4	2.3	2.4	5.28596	18/40	988	69	985	93.4	94.5	94.6	0.71	0.80	0.84	200
132	175	355M/L	1242	6.1	2.0	2.3	8.10159	90/198	1100	73	990	92.5	94.7	94.7	0.65	0.75	0.80	251
160	220	355M/L	1561	6.2	1.9	2.1	9.53128	72/158	1526	73	990	93.0	95.0	95.4	0.67	0.77	0.82	295
200	270	355M/L	1916	6.3	2.1	2.3	12.3907	85/187	1754	73	990	93.5	94.5	94.8	0.70	0.78	0.81	376
250	340	355M/L	2400	6.1	2.2	2.2	14.7735	64/141	1916	73	995	94.0	95.1	95.6	0.70	0.79	0.82	460
315	430	355M/L*	3051	6.0	1.9	1.9	15.4883	38/84	1979	73	990	94.3	95.8	95.9	0.69	0.78	0.81	585
HIGH-OUTPUT DESIGN																		
3	4	112M	29.3	6.3	2.6	2.6	0.02617	10/22	45	48	960	78.5	81.7	84.0	0.53	0.65	0.73	7.06
4	5.5	132S	40.2	6.0	2.1	2.3	0.05039	18/40	62	52	960	83.6	85.5	85.8	0.59	0.70	0.77	8.74
45	60	250S/M	430	8.0	2.8	2.8	1.55324	18/40	486	61	980	91.0	92.3	92.6	0.78	0.85	0.88	79.7
75	100	280S/M	713	6.7	2.3	2.5	3.44737	20/44	726	69	985	91.6	93.5	93.7	0.71	0.81	0.85	136
132	175	315S/M*	1248	6.3	2.1	2.2	5.28596	13/29	986	69	985	93.5	94.7	94.7	0.72	0.81	0.85	237
VIII Pole - 750 rpm																		
0.18	0.25	80	2.51	3.1	1.9	2.1	0.00242	16/35	14	42	700	40.0	49.0	54.2	0.43	0.53	0.62	0.77
0.25	0.33	80	3.41	3.0	1.8	1.8	0.00294	21/46	15	42	680	47.5	55.0	57.0	0.45	0.56	0.65	0.97
0.37	0.5	90S	5.05	3.5	2.1	2.1	0.00448	29/64	19	43	695	51.0	59.0	61.0	0.43	0.53	0.64	1.37
0.55	0.75	90L	7.63	3.5	2.1	2.1	0.00616	21/46	22	43	690	57.0	63.0	65.0	0.45	0.56	0.65	1.88
0.75	1	100L	9.96	4.2	2.0	2.1	0.00952	30/66	26	50	705	65.0	70.0	71.0	0.42	0.54	0.63	2.42
1.1	1.5	100L	15.1	4.1	1.7	2.1	0.01289	23/51	30	50	700	66.0	71.5	72.2	0.43	0.56	0.65	3.38
1.5	2	112M	19.8	4.6	2.5	2.7	0.02430	32/70	44	46	710	76.5	77.8	78.0	0.48	0.60	0.69	4.02
2.2	3	132S	29.5	6.2	2.4	2.7	0.07527	23/51	68	48	715	78.5	81.5	82.5	0.53	0.65	0.73	5.27
3	4	132M	39.6	5.8	2.4	2.7	0.08531	22/48	75	48	710	78.0	82.7	83.5	0.52	0.64	0.72	7.20
4	5.5	160M	52.9	5.2	2.2	2.7	0.12209	33/73	105	51	730	81.3	84.3	86.0	0.47	0.60	0.69	9.73
5.5	7.5	160M	72.2	5.2	2.3	2.7	0.14364	23/51	114	51	730	81.5	84.1	85.2	0.46	0.59	0.69	13.5
7.5	10	160L	96.9	4.9	2.0	2.5	0.16518	15/33	125	51	725	83.5	85.7	85.5	0.51	0.63	0.72	17.6
11	15	180L	145	6.8	2.3	2.5	0.30337	12/26	173	51	725	87.0	88.5	88.3	0.70	0.79	0.84	21.4
15	20	200L	192	4.6	2.0	2.1	0.37670	36/79	229	53	730	86.5	88.6	89.0	0.56	0.68	0.75	32.4
18.5	25	225S/M	241	6.9	2.1	2.8	0.84722	17/37	339	56	730	88.5	90.1	90.0	0.72	0.80	0.85	34.9
22	30	225S/M	289	7.5	2.2	2.7	0.98842	19/42	364	56	730	89.0	91.0	91.0	0.73	0.82	0.85	41.1
30	40	250S/M	385	7.9	2.3	2.9	1.22377	17/37	425	56	730	89.5	91.2	91.6	0.70	0.79	0.84	56.3
37	50	280S/M	475	6.5	1.9	2.3	2.29824	29/64	589	59	740	90.5	92.2	92.3	0.67	0.77	0.81	71.4
45	60	280S/M	570	6.5	2.0	2.4	2.64298	26/57	631	59	740	90.5	92.1	92.3	0.65	0.75	0.80	88.0
55	75	315S/M	712	6.5	1.9	2.2	3.10263	27/59	732	62	740	91.2	93.1	93.0	0.69	0.78	0.82	104
75	100	315S/M	949	6.6	1.9	2.2	4.36666	20/44	872	62	740	92.0	93.4	93.5	0.67	0.79	0.82	141
90	125	315S/M	1186	6.8	2.1	2.4	5.28596	23/51	1021	62	740	92.5	93.8	94.2	0.70	0.78	0.83	166
110	150	355M/L	1424	6.4	1.5	2.2	11.9324	41/90	1390	70	740	92.5	94.1	94.5	0.63	0.74	0.80	210
132	175	355M/L	1661	6.5	1.6	2.2	13.1885	47/103	1445	70	740	93.0	94.5	94.8	0.63	0.73	0.79	254
160	220	355M/L	2088	6.6	1.6	2.2	16.3286	42/92	1620	70	740	93.3	94.7	94.7	0.64	0.75	0.80	305
200	270	355M/L	2563	6.8	1.6	2.1	19.4687	37/81	1800	70	740	93.3	94.6	95.2	0.60	0.72	0.79	384
HIGH-OUTPUT DESIGN																		
7.5	10	160M	96.9	4.9	2.0	2.5	0.16518	15/33	123	51	725	83.5	85.7	85.5	0.51	0.63	0.72	17.6
37	50	250S/M	481	8.2	2.3	2.8	1.55324	13/29	479	56	730	89.0	91.5	91.5	0.68	0.78	0.84	69.5
55	75	280S/M	712	6.5	1.9	2.2	3.10263	27/59	696	62	740	91.2	93.1	93.0	0.69	0.78	0.82	104

Notes:
**Class "F" insulation with ΔT105K*
Standard voltage, connection and frequency: 220-240V Δ 50Hz *380-415V Δ 50Hz*
380-415V Y 50Hz *660-690V Y 50Hz*
The values shown are subject to change without prior notice. To obtain guaranteed values please access our website.

Smoke Extraction Motors Aluminium Frame - Single Speed - 200°C/2 hours Improved Efficiency EFF2

Output		380 V								415 V							
		Rated speed	% of full load						Full load current	Rated speed	% of full load						Full load current
			Efficiency η			Power Factor (Cos φ)					Efficiency η			Power Factor (Cos φ)			
kW	HP	(rpm)	50	75	100	50	75	100	I_n (A)	(rpm)	50	75	100	50	75	100	I_n (A)
VI Pole - 1000 rpm																	
0.25	0.33	945	54.0	62.0	65.0	0.47	0.59	0.68	0.86	955	50.0	58.0	63.0	0.41	0.51	0.62	0.89
0.37	0.5	920	56.0	64.0	66.0	0.49	0.62	0.72	1.18	935	52.0	61.0	64.0	0.42	0.54	0.64	1.26
0.55	0.75	920	62.0	65.8	68.0	0.54	0.67	0.77	1.60	935	58.0	64.0	66.0	0.47	0.59	0.68	1.70
0.75	1	910	71.5	72.8	71.5	0.58	0.71	0.79	2.02	930	68.5	72.4	72.4	0.50	0.64	0.73	1.97
1.1	1.5	915	72.0	75.5	74.8	0.55	0.69	0.78	2.86	935	70.0	75.2	75.2	0.46	0.61	0.72	2.83
1.5	2	930	75.0	77.5	77.0	0.58	0.70	0.76	3.89	950	73.0	77.3	77.6	0.50	0.63	0.71	3.79
2.2	3	930	79.0	80.8	79.7	0.58	0.70	0.76	5.52	950	76.0	80.3	80.5	0.50	0.63	0.72	5.28
3	4	955	81.0	83.0	82.0	0.61	0.72	0.79	7.04	965	79.0	82.5	82.6	0.53	0.66	0.74	6.83
4	5.5	955	84.5	85.7	85.4	0.61	0.72	0.79	9.01	965	82.6	85.3	85.9	0.56	0.67	0.75	8.64
5.5	7.5	955	85.0	86.1	85.6	0.58	0.71	0.77	12.7	965	83.0	85.5	86.0	0.53	0.65	0.74	12.0
7.5	10	965	87.5	88.4	87.5	0.66	0.78	0.83	15.7	970	86.5	88.0	88.0	0.58	0.71	0.79	15.0
11	15	970	88.0	88.5	88.0	0.67	0.78	0.84	22.6	975	86.5	88.0	88.3	0.58	0.72	0.80	21.7
15	20	960	89.0	90.0	89.5	0.84	0.89	0.91	28.0	970	89.0	90.5	90.5	0.80	0.87	0.90	25.6
18.5	25	970	89.7	90.7	89.8	0.74	0.82	0.86	36.4	980	88.9	90.3	91.2	0.66	0.76	0.82	34.4
22	30	970	89.6	91.0	91.2	0.74	0.82	0.85	43.1	980	88.4	90.7	91.3	0.66	0.76	0.82	40.9
30	40	980	91.0	91.8	91.6	0.80	0.86	0.88	56.5	985	90.0	91.8	92.2	0.73	0.81	0.86	52.6
37	50	980	90.5	92.5	92.4	0.80	0.86	0.88	69.1	985	89.5	92.4	92.6	0.73	0.82	0.86	64.6
45	60	985	91.0	92.3	92.6	0.72	0.81	0.85	86.9	990	90.0	92.3	92.7	0.64	0.76	0.82	82.4
55	75	985	92.0	93.2	93.4	0.74	0.84	0.87	103	990	91.2	93.2	93.6	0.68	0.80	0.84	97.3
75	100	985	92.0	93.5	93.5	0.74	0.82	0.86	142	990	91.2	93.5	93.8	0.69	0.80	0.84	132
90	125	985	92.8	93.9	93.6	0.75	0.83	0.86	170	990	92.2	93.9	93.9	0.71	0.79	0.84	159
110	150	985	93.6	94.4	94.4	0.74	0.82	0.85	208	985	93.2	94.5	94.7	0.69	0.79	0.83	195
132	175	990	93.0	94.7	94.5	0.70	0.80	0.82	259	995	92.0	94.7	94.7	0.60	0.70	0.77	252
160	220	990	93.5	95.2	95.2	0.73	0.80	0.84	304	990	92.5	94.9	95.4	0.63	0.74	0.80	292
200	270	990	94.0	94.7	94.8	0.74	0.81	0.83	386	990	93.0	94.3	94.8	0.66	0.75	0.79	372
250	340	995	94.3	95.2	95.5	0.74	0.81	0.83	479	995	93.7	95.0	95.8	0.67	0.77	0.81	448
315	430	985	94.8	96.0	95.8	0.73	0.80	0.82	609	990	93.8	95.6	95.8	0.65	0.76	0.80	572
HIGH-OUTPUT DESIGN																	
3	4	955	80.0	82.0	83.9	0.59	0.70	0.76	7.15	965	76.5	81.4	84	0.48	0.6	0.69	7.20
4	5.5	955	84.5	85.7	85.4	0.61	0.72	0.79	9.01	965	82.6	85.3	85.9	0.56	0.67	0.75	8.64
45	60	980	91.5	92.3	92.5	0.82	0.87	0.89	83.0	985	90.5	92.3	92.7	0.75	0.83	0.87	77.6
75	100	985	92.0	93.5	93.5	0.74	0.82	0.86	142	990	91.2	93.5	93.8	0.69	0.8	0.84	132
132	175	980	93.7	94.5	94.4	0.75	0.83	0.86	247	985	93.3	94.7	94.7	0.70	0.80	0.84	231
VIII Pole - 750 rpm																	
0.18	0.25	690	43.0	52.0	54.5	0.45	0.56	0.65	0.77	710	37.0	46.0	53.0	0.41	0.50	0.59	0.80
0.25	0.33	670	50.5	56.5	56.5	0.48	0.59	0.69	0.97	690	45.0	53.5	56.5	0.42	0.53	0.61	1.01
0.37	0.5	685	54.0	61.0	62.0	0.46	0.56	0.67	1.35	700	48.0	57.0	60.0	0.40	0.50	0.60	1.43
0.55	0.75	680	59.0	64.5	65.5	0.48	0.59	0.69	1.85	700	55.0	61.5	64.5	0.41	0.52	0.61	1.94
0.75	1	695	67.0	71.0	70.5	0.46	0.58	0.66	2.45	710	63.0	69.0	70.5	0.38	0.50	0.60	2.47
1.1	1.5	690	68.0	72.0	72.0	0.47	0.60	0.68	3.41	710	64.0	70.5	72.2	0.40	0.52	0.62	3.42
1.5	2	700	77.5	78.0	77.7	0.52	0.63	0.70	4.19	715	74.5	77.0	78.1	0.46	0.58	0.66	4.05
2.2	3	710	79.5	81.8	82.1	0.56	0.68	0.75	5.43	720	77.5	81.2	82.6	0.50	0.62	0.71	5.22
3	4	705	79.5	83.0	83.0	0.54	0.66	0.74	7.42	715	76.5	82.4	83.5	0.50	0.62	0.70	7.14
4	5.5	725	82.6	84.8	85.9	0.51	0.64	0.72	9.83	730	80.0	83.7	86.0	0.44	0.57	0.66	9.80
5.5	7.5	725	82.5	84.7	85.2	0.50	0.63	0.72	13.6	730	80.5	83.5	85.0	0.42	0.55	0.66	13.6
7.5	10	720	84.5	86.0	85.3	0.54	0.66	0.74	18.1	730	82.5	85.5	85.5	0.48	0.60	0.70	17.4
11	15	720	87.5	88.3	87.8	0.74	0.81	0.85	22.4	730	86.5	88.6	88.5	0.66	0.77	0.83	20.8
15	20	725	87.5	88.9	88.9	0.61	0.72	0.77	33.3	730	85.5	88.3	88.9	0.50	0.64	0.72	32.6
18.5	25	730	88.8	90.0	89.8	0.75	0.83	0.86	36.4	735	88.2	90.3	90.2	0.68	0.78	0.84	34.0
22	30	730	89.4	90.9	90.5	0.76	0.84	0.86	42.9	735	88.6	91.0	91.2	0.71	0.80	0.84	40.0
30	40	730	90.0	91.3	91.3	0.73	0.81	0.85	58.7	735	89.0	91.1	91.8	0.66	0.77	0.83	54.8
37	50	735	91.0	92.2	92.1	0.70	0.79	0.82	74.4	740	90.0	92.2	92.4	0.64	0.75	0.79	70.5
45	60	735	91.0	92.2	92.0	0.70	0.77	0.82	90.6	740	90.0	92.0	92.3	0.60	0.72	0.78	87.0
55	75	735	91.6	93.2	92.8	0.72	0.80	0.83	108	740	90.7	93.0	93.0	0.65	0.76	0.80	103
75	100	735	92.4	93.3	93.3	0.70	0.80	0.83	147	740	91.6	93.4	93.4	0.64	0.78	0.81	138
90	125	735	92.9	93.9	94.0	0.73	0.81	0.84	173	740	92.1	93.7	94.2	0.67	0.75	0.81	164
110	150	740	93.0	94.2	94.5	0.66	0.77	0.82	216	745	92.0	94.1	94.5	0.60	0.71	0.78	208
132	175	740	93.5	94.6	94.8	0.66	0.75	0.81	261	745	92.5	94.4	94.8	0.60	0.71	0.77	252
160	220	740	93.8	94.8	94.8	0.68	0.77	0.81	317	745	92.8	94.7	94.7	0.60	0.72	0.79	298
200	270	740	93.8	94.8	95.1	0.65	0.75	0.81	394	745	92.8	94.4	95.2	0.56	0.69	0.77	380
HIGH-OUTPUT DESIGN																	
7.5	10	720	84.5	86.0	85.3	0.54	0.66	0.74	18.1	730	82.5	85.5	85.5	0.48	0.60	0.70	17.4
37	50	730	89.5	91.5	91.0	0.72	0.82	0.86	71.8	735	88.5	91.5	91.5	0.64	0.76	0.82	68.6
55	75	735	91.6	93.2	92.8	0.72	0.80	0.83	108	740	90.7	93.0	93.0	0.65	0.76	0.80	103
110	150	735	93.0	94.1	94.8	0.66	0.75	0.80	220	740	92.0	94.1	94.8	0.56	0.71	0.77	210

[1)]For Pad Mounted, please consider frame size 180L.
[2)]Frame size 132M/L is not available for Pad Mounted.
For Pad Mounted version frame sizes up to 250S/M.

Smoke Extraction Motors Aluminium Frame - Two Speed - 200°C/2 hours Improved Efficiency EFF2 - Variable torque IV/II Pole - Dahlander Winding

Output		IEC Frame	Full load torque C_n (Nm)	Locked rotor current I_l/I_n	Locked rotor torque T_l/T_n	Break-down torque T_b/T_n	Inertia J kgm²	Allowable locked rotor time Hot/Cold (s)	Weight (kg)	Sound dB (A)	Rated speed (rpm)	400 V						Full load current I_n (A)
												% of full load						
												Efficiency η			Power Factor (Cos φ)			
kW	HP											50	75	100	50	75	100	
50Hz - 400V - IV/II pole (1500/3000 rpm) - Y / YY connection																		
0.20	0.27	80	1.35	4.5	2.0	2.5	0.00242	30/66	14	44	1400	64.0	68.0	68.5	0.48	0.61	0.70	0.60
0.80	1.08		2.69	6.0	2.5	3.2	0.00242	15		59	2820	70.0	72.0	73.0	0.66	0.77	0.83	1.91
0.25	0.33	80	1.67	3.8	2.2	2.5	0.00294	30/66	15	44	1390	66.0	70.0	70.5	0.48	0.60	0.68	0.75
1.1	1.5		3.75	6.0	2.5	2.8	0.00294	22		59	2810	74.0	75.0	75.0	0.71	0.83	0.88	2.41
0.37	0.5	90S	2.45	4.5	2.0	2.1	0.00476	18/40	20	47	1435	62.3	67.4	68.8	0.45	0.54	0.62	1.25
1.5	2		4.84	6.5	2.5	3.0	0.00476	33		68	2900	68.0	75.0	76.4	0.62	0.73	0.80	3.54
0.5	0.68	90L	3.36	3.5	1.8	2.2	0.00616	13/29	22	47	1420	67.0	70.0	71.0	0.47	0.58	0.66	1.54
2.2	3		7.41	6.0	2.2	2.6	0.00616	58		68	2845	75.0	77.8	78.9	0.71	0.80	0.87	4.63
0.65	0.88	100L	4.31	4.5	2.1	2.2	0.00765	22/48	30	51	1435	72.0	76.5	77.5	0.56	0.67	0.73	1.66
2.5	3.4		8.26	6.5	2.3	2.8	0.00765	118		67	2890	78.0	80.0	81.0	0.70	0.81	0.86	5.18
0.8	1.08	100L	5.30	4.6	2.1	2.2	0.00918	18/40	33	51	1430	75.0	77.0	77.5	0.57	0.68	0.75	1.99
3.1	4.2		10.2	7.2	2.3	2.8	0.00918	160		67	2890	80.0	81.5	82.0	0.73	0.83	0.88	6.20
1.1	1.5	112M	7.32	5.0	1.8	2.6	0.01741	22/48	43	55	1440	74.0	78.5	79.0	0.55	0.66	0.72	2.79
4.4	5.9		14.3	7.8	2.4	3.0	0.01741	242		64	2890	82.5	83.5	84.0	0.76	0.84	0.88	8.59
1.5	2	132S	9.62	5.6	2.0	2.4	0.0243	38/64	58	58	1460	77.0	81.5	83.0	0.50	0.62	0.71	3.67
6	8		19.2	8.3	2.5	3.0	0.0243	385		68	2930	83.5	85.0	85.0	0.73	0.84	0.89	11.4
2	2.7	132M	12.9	5.8	1.9	2.0	0.02804	38/64	67	58	1470	80.0	82.0	83.0	0.51	0.63	0.72	4.83
8	10.8		25.9	8.5	2.6	2.7	0.02804	6/13		68	2930	82.8	84.0	85.0	0.77	0.85	0.89	15.3
3	4	160M	19.1	6.0	2.0	2.4	0.05294	28/62	118	62	1470	80.0	83.0	84.0	0.50	0.63	0.71	7.26
12	16		38.1	8.5	2.5	2.9	0.05294	6/13		70	2950	83.0	85.0	86.0	0.71	0.81	0.87	23.1
4	5.5	160L	26.3	6.0	2.2	2.4	0.06766	30/66	135	62	1470	83.5	84.5	85.0	0.50	0.63	0.71	9.57
16	21.7		51.7	8.6	2.6	3.0	0.06766	6/13		70	2950	85.0	86.5	87.0	0.73	0.82	0.87	30.5
5.5	7.5	180M[1)]	36.0	4.7	1.6	2.7	0.11352	40/88	160	64	1465	84.5	87.0	87.0	0.54	0.65	0.72	12.7
20	27.2		64.7	9.2	2.7	3.5	0.11352	6/13		70	2955	87.5	89.5	90.0	0.76	0.84	0.89	36.0
6.3	8.6	180L	41.2	4.7	1.6	2.4	0.21527	35/77	180	64	1465	86.5	88.0	88.5	0.54	0.65	0.72	14.3
25	34		81.0	8.9	2.7	3.4	0.21527	6/13		70	2950	90.0	90.7	91.0	0.76	0.85	0.89	44.6
8.5	11.5	200L	55.0	4.2	2.0	2.0	0.22426	50/110	242	67	1470	88.5	89.5	90.0	0.58	0.69	0.74	18.4
33	44.8		106	8.2	3.2	2.8	0.22426	10/22		74	2960	89.5	91.0	91.2	0.80	0.87	0.89	58.7

Notes:
**Class "F" insulation with ΔT105K*
Standard voltage, connection and frequency: 220-240V Δ 50Hz *380-415V Δ 50Hz*
380-415V Y 50Hz *660-690V Y 50Hz*
The values shown are subject to change without prior notice. To obtain guaranteed values please access our website.

[1)]For Pad Mounted, please consider frame size 180L.
[2)]Frame size 132M/L is not available for Pad Mounted.
For Pad Mounted version frame sizes up to 250S/M.

Smoke Extraction Motors Aluminium Frame - Two Speed - 200°C/2 hours
Improved Efficiency EFF2 - Variable torque VIII/VI Pole - Dahlander Winding

Output		IEC Frame	Full load torque C_n (Nm)	Locked rotor current I_l/I_n	Locked rotor torque T_l/T_n	Break-down torque T_b/T_n	Inertia J kgm²	Allowable locked rotor time Hot/Cold (s)	Weight (kg)	Sound dB (A)	Rated speed (rpm)	400 V						Full load current I_n (A)
												% of full load						
												Efficiency η			Power Factor (Cos φ)			
kW	HP											50	75	100	50	75	100	
50Hz - 400V - VIII/IV pole (750/1500 rpm) - Y / YY connection																		
0 .15	0.2	80	1.98	3.1	2.3	2.5	0.00294	20/44	15	42	710	31.0	39.0	46.0	0.47	0.54	0.62	0.76
0.6	0.8		3.90	5.5	2.2	2.7		6/13		51	1440	57.0	65.0	68.5	0.51	0.64	0.72	1.76
0.2	0.27	80	2.75	2.7	1.7	2.0	0.00294	18/40	15	42	690	37.0	45.0	49.5	0.50	0.60	0.66	0.88
0.8	1.08		5.36	4.7	1.7	2.1		6/13		51	1415	64.0	69.0	70.0	0.59	0.73	0.83	1.99
0.3	0.4	90S	3.99	3.1	2.2	2.2	0.00560	28/62	20	43	705	46.0	54.0	57.0	0.42	0.50	0.59	1.29
1.2	1.6		7.86	5.5	2.3	2.7		6/13		53	1430	72.0	75.0	76.0	0.55	0.69	0.78	2.92
0.4	0.55	90L	5.52	3.2	2.2	2.3	0.00672	17/37	23	43	700	49.0	56.0	59.0	0.40	0.50	0.58	1.69
1.6	2.17		10.7	5.7	2.3	2.6		6/13		54	1420	73.0	76.0	77.0	0.57	0.70	0.79	3.80
0.55	0.75	100L	7.53	3.5	2.3	2.5	0.01345	20/44	30	50	700	55.0	63.0	65.0	0.40	0.52	0.61	2.00
2.2	3		14.7	6.9	2.5	2.8		6/13		55	1430	77.0	79.0	80.0	0.62	0.75	0.82	4.84
0.7	0.95	100L	9.67	3.6	2.2	2.4	0.01457	20/44	33	50	690	58.0	64.5	66.5	0.42	0.53	0.63	2.41
2.8	3.8		18.9	6.0	2.4	2.6		6/13		55	1410	77.5	80.0	80.0	0.64	0.77	0.84	6.01
1	1.4	112M	13.9	4.0	2.0	2.1	0.02617	18/40	43	46	710	70.0	73.0	74.0	0.50	0.64	0.71	2.75
3.8	5.2		25.4	7.0	2.6	2.8		6/13		57	1440	76.0	78.5	80.0	0.62	0.76	0.83	8.26
1.3	1.77	132S	17.0	6.2	2.1	2.8	0.07527	20/44	68	48	730	72.0	75.0	76.5	0.48	0.61	0.70	3.50
5	6.8		33.2	8.5	2.7	2.8		6/13		62	1440	77.0	79.0	80.0	0.71	0.82	0.87	10.4
1.8	2.45	132M/L[2]	23.7	6.2	2.1	2.5	0.09535	21/46	80	48	725	76.0	79.0	80.0	0.50	0.63	0.70	4.64
7.2	9.8		48.1	8.5	2.7	2.7		6/13		62	1430	79.0	81.0	82.0	0.71	0.82	0.88	14.4
3	4	160M	38.8	4.3	1.7	2.1	0.14364	30/66	119	51	725	81.0	82.0	82.5	0.54	0.67	0.75	7.00
11	15		72.4	7.0	2.4	2.7		6/13		64	1455	84.0	85.5	86.0	0.71	0.83	0.88	21.0
3.5	4.8	160L	46.5	4.2	1.9	2.2	0.18673	30/66	135	51	725	81.0	83.0	83.0	0.51	0.64	0.72	8.45
14	19		91.7	7.2	2.6	2.9		6/13		64	1455	84.0	86.0	86.5	0.71	0.83	0.88	26.5
4.3	5.8	180M[1]	55.8	4.0	1.7	2.0	0.19734	20/44	162	51	730	80.0	83.0	84.2	0.39	0.50	0.58	12.7
17	23		110	8.0	2.4	2.8		7/15		69	1475	88.6	89.5	89.5	0.62	0.75	0.82	33.4
5	6.8	180L	65.4	5.1	2.0	2.0	0.33095	20/44	177	51	730	79.0	82.7	82.7	0.40	0.54	0.62	14.1
20	27		129	8.8	2.5	2.6		7/15		69	1470	85.0	88.0	89.0	0.65	0.77	0.84	38.6
6.5	8.8	200L	84.1	3.6	1.9	2.0	0.38609	20/44	235	53	735	83.5	86.5	87.0	0.43	0.54	0.60	18.0
28	38		180	7.4	2.6	2.8		8/18		70	1480	90.5	91.5	91.5	0.71	0.81	0.85	52.0
8	10.8	200L*	104	4.0	1.8	2.0	0.41370	20/44	255	53	730	82.5	86.0	87.0	0.41	0.53	0.61	21.8
35	47		225	7.8	2.4	2.8		6/13		70	1470	89.0	90.0	90.5	0.66	0.78	0.83	67.3
9.2	12.5	225S/M	119	5.5	2.8	3.1	0.75686	18/40	360	56	740	81.0	85.0	87.0	0.43	0.53	0.60	25.4
37	50		237	9.5	3.1	4.2		6/13		70	1485	86.5	89.0	90.0	0.62	0.74	0.80	74.2
11	15	225S/M	142	5.0	2.2	2.2	1.12963	20/44	425	56	740	83.0	86.0	87.0	0.47	0.58	0.67	27.2
44	59.7		283	8.0	2.4	3.0		8/18		74	1480	89.0	90.5	91.0	0.73	0.83	0.87	80.2
14.7	19.9	225S/M	190	4.6	1.8	2.0	1.55324	18/40	450	56	735	86.0	87.5	88.0	0.45	0.58	0.66	36.5
55	75		356	9.0	2.6	3.0		6/13		74	1480	89.0	90.5	91.0	0.71	0.82	0.87	100
17	23	280S/M	218	4.2	1.5	1.6	3.33245	20/44	650	59	740	83.2	86.4	88.6	0.47	0.57	0.63	44.0
68	92.3		437	8.0	2.5	2.5		10/22		74	1485	85.1	89.0	90.0	0.76	0.83	0.86	127
20	27	280S/M	256	4.2	1.6	1.6	3.67719	20/44	690	59	740	83.9	87.3	89.0	0.46	0.57	0.61	53.2
80	109		516	8.6	2.7	2.8		10/22		78	1485	86.5	89.0	90.3	0.76	0.81	0.84	152
27	37	315S/M	351	4.0	1.7	1.7	4.82631	20/44	890	62	740	81.9	86.8	88.5	0.40	0.50	0.56	78.6
110	150		709	8.5	2.6	2.7		10/22		78	1485	88.0	90.2	91.3	0.69	0.72	0.82	212
33	44.8	315S/M	425	4.0	1.7	1.8	5.40087	20/44	990	62	740	83.5	87.8	89.4	0.40	0.51	0.58	91.9
130	177		837	8.4	2.6	2.7		10/22		78	1485	87.3	90.0	91.3	0.65	0.76	0.82	251
40	55	315S/M	522	4.0	1.6	1.6	5.40087	20/44	1000	62	740	89.2	91.0	91.3	0.43	0.59	0.59	107
160	217		1026	8.0	2.3	2.5		10/22		78	1485	91.3	92.8	93.9	0.74	0.84	0.84	293

Smoke Extraction Motors Aluminium Frame - Two Speed - 200°C/2 hours Improved Efficiency EFF2 - Variable torque VI/IV Pole - Independent Winding

Output		IEC Frame	Full load torque C_n (Nm)	Locked rotor current I_l/I_n	Locked rotor torque T_l/T_n	Break-down torque T_b/T_n	Inertia J kgm²	Allowable locked rotor time Hot/Cold (s)	Weight (kg)	Sound dB (A)	Rated speed (rpm)	400 V						Full load current I_n (A)
												% of full load						
												Efficiency η			Power Factor (Cos φ)			
kW	HP											50	75	100	50	75	100	
50Hz - 400V - VI/IV pole (1000/1500 rpm) - Y / Y connection																		
0.2	0.27	80	1.96	3.7	1.9	2.7	0.0033	9/20	11	48	970	31.0	40.0	46.0	0.44	0.52	0.60	1.05
0.55	0.75		3.63	5.0	1.9	2.7		6/13		54	1450	52.0	60.0	65.7	0.48	0.61	0.69	1.75
0.25	0.33	80	2.39	3.9	2.5	3.4	0.0035	7/15	12	48	970	33.0	41.5	48.0	0.42	0.50	0.57	1.32
0.75	1		4.91	4.7	1.4	2.1		6/13		54	1430	62.0	67.0	68.0	0.59	0.72	0.82	1.94
0.3	0.4	90S	2.90	5.1	2.6	3.2	0.00560	9/20	16	45	970	38.0	48.0	53.0	0.39	0.46	0.54	1.51
1.1	1.5		7.32	5.4	2.0	2.6		6/13		57	1440	65.0	71.0	72.5	0.51	0.65	0.75	2.92
0.37	0.5	90L	3.62	4.5	2.1	2.6	0.0067	8/18	20	45	970	40.0	50.0	55.0	0.43	0.50	0.60	1.62
1.5	2		9.76	5.5	1.9	2.4		6/13		57	1440	70.0	74.0	75.0	0.55	0.69	0.79	3.65
0.6	0.82	100L	5.94	5.0	2.2	3.1	0.0135	9/20	25	44	970	51.0	59.0	63.0	0.41	0.50	0.59	2.33
1.7	2.3		11.1	6.5	2.1	2.7		6/13		59	1450	68.0	73.0	75.0	0.52	0.65	0.74	4.42
0.7	0.95	100L	6.88	5.5	2.8	3.5	0.01000	10/22	27	44	970	57.0	64.0	68.0	0.40	0.50	0.60	2.48
2.2	3		14.7	6.0	1.7	2.2		6/13		59	1430	76.0	77.0	77.0	0.64	0.77	0.84	4.91
1	1.36	112M	9.70	6.2	3.0	3.5	0.0262	7/15	36	48	985	54.0	63.0	68.0	0.37	0.46	0.55	3.86
3	4		19.2	7.6	2.6	3.0		6/13		61	1460	76.0	80.0	81.0	0.58	0.70	0.78	6.85
1.5	2	132S	14.2	7.0	3.0	3.8	0.0507	8/18	68	52	990	64.0	71.0	76.0	0.35	0.45	0.53	5.38
4.5	6		28.8	7.5	2.8	3.1		8/18		65	1465	76.0	80.0	82.0	0.58	0.70	0.78	10.2
2.2	3	132M	21.3	7.4	2.8	3.2	0.0624	7/15	79	52	990	72.0	78.0	80.0	0.37	0.48	0.57	6.96
6	8.1		38.8	7.8	2.5	3.1		6/13		65	1465	75.0	80.0	82.0	0.57	0.70	0.78	13.7
2.5	3.4	160M	24.4	7.0	2.5	3.6	0.1149	12/26	96	56	980	74.5	79.0	81.0	0.49	0.64	0.74	6.02
5.5	7.5		35.7	7.5	2.0	3.3		6/13		68	1475	75.5	80.0	81.5	0.60	0.74	0.83	11.7
3.3	4.5	160M	32.4	4.0	2.0	2.3	0.10610	18/40	120	56	975	75.5	78.5	79.0	0.48	0.61	0.69	8.74
10	13.6		64.8	7.0	3.0	3.2		7/15		68	1475	83.0	86.0	87.0	0.56	0.69	0.76	22.0
3.5	4.8	160M	34.4	6.6	2.3	3.2	0.1436	9/20	118	56	980	77.0	81.0	82.0	0.53	0.68	0.78	7.90
7.5	10		47.6	8.0	2.2	3.5		6/13		68	1475	78.0	82.0	83.5	0.60	0.75	0.83	15.6
4.5	6	160L	43.2	4.5	1.9	2.0	0.1313	8/18	135	56	975	77.0	79.0	79.0	0.56	0.68	0.75	11.0
14	19		90.8	7.0	3.0	3.0		8/18		68	1470	84.5	87.0	88.0	0.66	0.77	0.82	28.0
5	6.8	180M[1)]	48.5	8.0	2.2	2.7	0.2758	6/13	163	56	985	85.0	86.0	86.0	0.73	0.83	0.87	9.65
11	15		71.7	10.0	2.6	3.3		5/11		71	1470	86.5	88.0	88.5	0.85	0.90	0.92	19.5
6.5	8.8	180M[1)]	63.1	7.6	2.1	2.9	0.3331	5/11	195	56	980	85.5	86.0	86.3	0.73	0.83	0.87	12.5
16	21.7		104	8.5	2.4	2.9		5/11		71	1465	88.0	88.5	88.5	0.89	0.91	0.92	28.4
8.5	11.5	180L	82.0	8.7	2.5	3.5	0.3792	5/11	230	56	985	86.5	87.5	87.5	0.68	0.80	0.86	16.3
20	27.2		130	9.0	2.4	3.3		5/11		71	1465	88.5	89.0	89.0	0.86	0.91	0.93	34.9
9	12.2	200L	86.6	8.1	3.0	3.2	0.50550	7/15	280	58	990	84.5	87.5	88.5	0.58	0.70	0.79	18.6
26	35.5		168	7.5	2.5	3.1		13/29		74	1480	88.5	90.5	90.5	0.74	0.83	0.87	47.7
12	16	225S/M	114	8.3	3.5	3.5	0.7748	9/20	379	61	990	82.0	85.5	87.0	0.50	0.62	0.71	28.0
34	46.2		219	8.5	2.5	3.2		6/13		76	1485	87.0	89.0	89.0	0.72	0.82	0.87	63.4
14	19	225S/M	135	8.0	3.2	3.3	0.8452	5/11	433	61	990	81.5	85.5	87.0	0.48	0.61	0.71	32.7
40	55		260	9.0	2.9	3.5		5/11		76	1485	88.5	90.5	91.0	0.71	0.81	0.87	72.9
18	24.4	225S/M	173	8.1	3.3	3.6	1.1622	9/20	520	61	990	86.0	88.0	89.0	0.51	0.65	0.73	40.0
50	68		322	8.6	2.6	3.4		5/11		76	1485	90.0	91.5	92.0	0.73	0.83	0.87	90.2
25	34	280S/M	241	8.0	3.6	3.2	2.5859	11/24	685	66	990	84.0	87.5	89.0	0.50	0.61	0.69	58.8
70	95		449	7.5	2.3	2.8		20/44		81	1485	90.5	92.0	93.0	0.78	0.85	0.87	125
28	38	280S/M	270	7.1	3.1	2.7	2.8284	24/53	748	66	990	86.0	89.0	90.5	0.55	0.66	0.73	61.2
80	109		514	9.0	2.7	3.4		12/26		81	1490	89.0	91.5	92.6	0.71	0.80	0.85	147
34	46	315S/M	325	8.8	3.7	3.4	3.3941	8/18	898	69	995	85.0	88.0	90.0	0.49	0.61	0.69	79.0
95	129		610	8.1	2.9	2.9		15/33		81	1485	91.0	92.7	93.5	0.79	0.85	0.88	167
40	54.3	315S/M	385	7.0	3.3	3.3	3.79810	15/33	1005	69	990	88.5	90.5	91.5	0.50	0.62	0.70	90.1
115	156		735	9.0	3.0	3.8		11/24		81	1490	91.4	93.2	93.9	0.62	0.73	0.80	221
45	60	315S/M	426	6.5	2.7	2.5	3.79810	8/18	1005	69	990	90.0	91.0	91.5	0.60	0.71	0.77	92.2
125	170		801	9.0	2.9	3.5		13/29		81	1490	93.0	94.0	94.5	0.70	0.80	0.83	230
55	75	315S/M	532	7.2	3.2	2.9	3.79810	5/11	1005	69	990	90.0	91.0	91.6	0.56	0.68	0.75	116
145	197		932	8.0	2.5	3.0		9/20		81	1485	93.5	94.5	94.5	0.73	0.83	0.84	264

Notes:
**Class "F" insulation with ΔT105K*
Standard voltage, connection and frequency: 220-240V Δ 50Hz 380-415V Δ 50Hz
380-415V Y 50Hz 660-690V Y 50Hz
The values shown are subject to change without prior notice. To obtain guaranteed values please access our website.

Smoke Extraction Motors Aluminium Frame - Two Speed - 200°C/2 hours Improved Efficiency EFF2 - Variable torque IV/II Pole - Dahlander Winding

Output		IEC Frame	Full load torque C_n (Nm)	Locked rotor current I_l/I_n	Locked rotor torque T_l/T_n	Break-down torque T_b/T_n	Inertia J kgm²	Allowable locked rotor time Hot/Cold (s)	Weight (kg)	Sound dB (A)	Rated speed (rpm)	400 V						Full load current I_n (A)
												% of full load						
												Efficiency η			Power Factor (Cos φ)			
kW	HP											50	75	100	50	75	100	
50Hz - 400V - IV/II pole (1500/3000 rpm) - D / YY connection																		
0.48	0.65	80	3.31	4.0	2.3	2.3	0.00079	20/44	14	44	1380	61.0	67.0	68.1	0.50	0.62	0.72	1.41
0.60	0.82		2.04	6.1	2.5	2.8		12/26		59	2830	69.0	72.0	73.0	0.72	0.82	0.87	1.36
0.70	0.95	80	4.91	4.0	2.2	2.2	0.00096	18/40	15	44	1360	65.0	68.0	68.4	0.50	0.62	0.71	2.08
0.85	1.15		2.86	6.2	2.5	2.8		10/22		59	2820	72.0	75.5	76.5	0.73	0.82	0.88	1.82
1.1	1.5	90S	7.53	5.0	2.1	2.2	0.00504	7/15	20	47	1400	71.0	73.5	74.0	0.66	0.78	0.84	2.55
1.4	1.9		4.85	6.0	2.2	2.2		6/13		68	2750	68.0	72.0	73.0	0.70	0.81	0.90	3.08
1.5	2	90L	9.96	5.2	2.3	2.4	0.00616	8/18	22	47	1410	73.0	75.3	76.0	0.61	0.76	0.83	3.43
1.9	2.6		6.50	5.5	2.3	2.5		6/13		68	2810	68.0	72.0	72.5	0.74	0.84	0.90	4.20
2	2.7	100L	13.5	6.0	2.4	2.4	0.00918	12/26	34	51	1410	72.4	75.5	76.2	0.62	0.74	0.83	4.56
2.4	3.3		8.08	6.7	2.4	2.5		8/18		67	2870	72.0	74.0	76.0	0.75	0.85	0.89	5.12
2.6	3.5	100L	17.4	5.5	2.4	2.5	0.00918	8/18	34	51	1410	74.0	77.3	78.0	0.62	0.74	0.83	5.80
3.1	4.2		10.3	6.8	2.5	2.8		6/13		67	2870	74.0	77.0	77.5	0.67	0.80	0.87	6.64
3.7	5	112M	24.6	6.0	2.3	2.3	0.01607	8/18	45	55	1430	79.5	80.0	80.0	0.68	0.80	0.86	7.76
4.4	5.9		14.4	7.3	2.4	2.7		6/13		64	2885	79.0	80.0	80.5	0.77	0.86	0.91	8.67
4.9	6.6	132S	32.0	6.5	1.7	2.0	0.04264	8/18	62	58	1450	82.0	83.0	83.0	0.78	0.86	0.89	9.57
5.9	7.9		19.2	6.5	2.0	2.3		6/13		68	2890	77.5	78.5	79.0	0.82	0.89	0.92	11.7
6.8	9.2	132M	44.6	6.4	1.6	2.0	0.05427	7/15	68	58	1450	83.0	84.0	84.0	0.75	0.84	0.88	13.3
8	10.9		26.3	6.5	2.0	2.3		6/13		68	2910	79.0	81.0	82.0	0.75	0.87	0.91	15.5
9.5	12.9	160M	62.5	5.0	2.0	2.1	0.09535	20/44	110	62	1450	83.5	84.2	85.0	0.77	0.84	0.86	18.8
11	15		35.8	8.0	2.8	2.8		10/22		70	2940	80.0	82.1	83.0	0.78	0.86	0.87	22.0
12	16.3	160L*	79.0	5.0	1.9	2.0	0.11542	20/44	126	62	1450	83.9	85.5	86.0	0.78	0.85	0.87	23.1
15	20		48.3	7.0	2.1	2.6		8/18		70	2910	82.5	85.0	85.4	0.85	0.90	0.92	27.6
15	20	180M[1)]	96.2	6.3	2.2	2.3	0.19733	17/37	170	64	1460	86.5	87.7	88.0	0.72	0.81	0.86	28.6
18	24.5		58.3	7.5	2.3	2.8		10/22		70	2950	86.5	87.5	88.0	0.84	0.89	0.92	32.1
18	24.5	180L	117	6.7	2.2	2.4	0.22424	15/33	190	64	1465	87.5	88.7	89.0	0.71	0.81	0.85	34.3
21.5	29.2		69.5	8.5	2.5	2.9		9/20		70	2950	86.5	88.0	88.7	0.79	0.87	0.90	38.9
26	35	200L	167	6.2	2.0	2.2	0.35853	22/48	250	67	1475	89.0	90.0	90.5	0.69	0.79	0.84	49.4
33	45		107	8.0	2.2	2.5		8/18		74	2950	85.5	88.0	88.8	0.83	0.89	0.91	58.9
32	43.5	225S/M	206	8.1	2.6	3.3	0.69987	11/24	350	70	1480	89.0	90.1	90.6	0.76	0.83	0.88	57.9
38	52		123	8.7	2.6	3.3		8/18		78	2960	84.6	87.3	88.5	0.83	0.87	0.89	69.6
38	52	225S/M	247	7.8	2.3	2.6	0.76985	12/26	380	70	1480	89.0	90.4	91.0	0.75	0.83	0.88	68.5
45	60		142	8.3	2.5	2.8		7/15		78	2960	85.0	87.9	89.0	0.77	0.84	0.87	83.9
46	63	250S/M	301	8.0	2.3	2.6	0.97981	7/15	440	70	1470	89.2	90.8	91.4	0.76	0.83	0.88	82.5
55	75		179	8.6	2.2	2.8		6/13		78	2940	85.5	88.4	89.5	0.82	0.87	0.90	98.6

[1)]For Pad Mounted, please consider frame size 180L.
[2)]Frame size 132M/L is not available for Pad Mounted.
For Pad Mounted version frame sizes up to 250S/M.

Smoke Extraction Motors Aluminium Frame - Two Speed - 200°C/2 hours Improved Efficiency EFF2 - Variable torque VIII/IV Pole - Dahlander Winding

Output		IEC Frame	Full load torque C_n (Nm)	Locked rotor current I_l/I_n	Locked rotor torque T_l/T_n	Break-down torque T_b/T_n	Inertia J kgm²	Allowable locked rotor time Hot/Cold (s)	Weight (kg)	Sound dB (A)	Rated speed (rpm)	400 V						Full load current I_n (A)
												% of full load						
												Efficiency η			Power Factor (Cos φ)			
kW	HP											50	75	100	50	75	100	
50Hz - 400V - VIII/IV pole (750/1500 rpm) - Δ / YY connection																		
0.27	0.37	80	3.79	2.5	1.8	1.8	0.00294	10/22	15	42	685	35.0	41.0	48.0	0.46	0.55	0.64	1.27
0.4	0.55		2.72	4.2	1.6	1.8		9/20		51	1420	65.0	68.0	69.1	0.60	0.71	0.81	1.03
0.4	0.54	90S	5.42	3.2	2.0	2.0	0.00504	13/29	19	43	700	40.0	50.0	53.0	0.42	0.52	0.60	1.82
0.7	0.95		4.77	5.0	1.8	2.0		8/18		53	1400	71.5	73.0	73.0	0.68	0.80	0.86	1.61
0.52	0.71	90L	7.12	3.3	2.0	2.0	0.00672	8/18	23	43	700	45.0	53.0	57.0	0.42	0.53	0.63	2.09
0.9	1.22		6.16	5.2	1.8	2.0		7/15		54	1390	73.5	75.0	75.0	0.70	0.81	0.86	2.01
0.7	0.95	100L	9.40	4.2	1.9	2.2	0.01121	13/29	29	50	710	60.0	66.0	68.0	0.42	0.53	0.64	2.32
1.1	1.5		7.32	5.8	2.0	2.4		6/13		55	1440	71.0	75.0	75.0	0.61	0.74	0.82	2.58
1.1	1.5	100L	15.1	4.2	1.9	2.3	0.01289	12/26	31	50	700	62.0	67.0	68.5	0.44	0.56	0.66	3.51
1.8	2.45		12.0	5.5	2.1	2.4		6/13		55	1430	70.0	75.0	75.0	0.64	0.75	0.82	4.22
1.5	2	112M	19.5	5.0	2.5	2.5	0.02617	8/18	45	46	720	66.0	71.0	75.0	0.43	0.53	0.64	4.51
2.5	3.4		16.6	7.0	2.5	2.7		6/13		57	1440	78.0	80.0	80.5	0.72	0.82	0.88	5.09
1.9	2.58	132S	25.2	6.3	2.6	2.6	0.07527	7/15	68	48	720	70.0	74.5	76.0	0.44	0.57	0.67	5.39
3.7	5		24.6	7.0	2.4	2.4		6/13		62	1430	79.2	80.1	82.0	0.78	0.87	0.90	7.24
3.3	4.5	132M/L[2)]	43.9	6.3	2.6	2.8	0.09535	10/22	80	48	720	74.0	77.0	78.0	0.47	0.60	0.70	8.72
5.5	7.5		36.8	7.5	2.7	2.7		6/13		62	1430	79.6	80.6	82.5	0.78	0.87	0.90	10.7
3.7	5	160M	48.1	5.4	2.3	2.8	0.12927	10/22	119	51	730	72.5	77.5	79.5	0.43	0.55	0.65	10.3
7	9.5		46.0	6.5	2.2	2.6		6/13		64	1450	83.5	84.2	84.5	0.79	0.87	0.90	13.3
5.5	7.5	160M	73.2	5.0	2.1	2.4	0.14364	15/33	119	51	720	74.0	77.5	79.6	0.48	0.60	0.70	14.2
8.8	12		58.1	6.5	2.1	2.4		7/15		64	1450	83.2	84.3	84.5	0.79	0.86	0.88	17.1
7	9.5	160L	92.0	5.0	2.3	2.4	0.16518	12/26	127	51	725	75.0	79.5	80.5	0.46	0.58	0.68	18.5
11	15		72.4	6.5	2.2	2.6		6/13		64	1455	84.0	85.0	85.0	0.77	0.86	0.89	21.0
11	15	180L	144	7.3	2.3	2.5	0.30337	6/13	177	51	730	82.0	82.6	84.0	0.50	0.63	0.70	27.0
18	24.5		118	8.5	2.2	2.4		6/13		69	1460	85.8	86.3	87.0	0.81	0.88	0.90	33.2
17	23	200L	220	4.5	2.0	2.2	0.50227	26/57	255	53	735	84.5	86.5	87.2	0.54	0.67	0.74	38.0
27	37		177	6.0	2.0	2.4		10/22		67	1465	88.0	89.0	89.5	0.85	0.89	0.91	47.8
22	30	225S/M	289	7.5	2.0	2.3	1.22377	9/20	360	56	730	86.5	87.5	88.0	0.65	0.76	0.82	44.0
32	43.5		209	8.5	2.0	2.5		6/13		70	1465	87.5	88.5	89.0	0.89	0.93	0.94	55.2
26	35	225S/M	339	7.5	2.0	2.3	1.36497	7/15	425	56	725	86.2	87.3	88.0	0.67	0.78	0.82	52.0
37	50		242	8.8	2.0	2.3		6/13		70	1450	87.2	88.1	88.7	0.85	0.89	0.91	66.2
33	45	250S/M	433	7.2	1.9	2.2	1.55324	6/13	450	56	730	87.0	88.3	89.0	0.67	0.78	0.82	65.3
47	64		308	9.0	2.2	2.4		6/13		70	1460	87.5	88.4	90.0	0.86	0.90	0.92	81.9
38	52	280S/M	494	5.0	1.8	2.2	3.33245	25/55	650	59	740	87.8	89.5	90.5	0.53	0.63	0.69	87.8
56	76		359	7.0	1.8	2.2		12/26		77	1485	89.5	90.5	91.0	0.83	0.86	0.88	101
46	63	280S/M	602	4.5	1.7	2.0	2.5692	30/66	690	59	735	89.0	90.0	90.2	0.53	0.63	0.70	105
67	91		430	7.0	2.0	2.2		15/33		77	1485	90.5	91.4	91.8	0.84	0.88	0.89	118
56	76	315S/M	726	4.5	1.8	2.0	3.21158	30/66	890	62	735	89.5	90.5	91.0	0.53	0.64	0.70	127
83	113		536	7.0	2.0	2.2		15/33		77	1480	90.5	91.5	92.0	0.84	0.88	0.90	145
78	106	315S/M	1006	7.0	1.8	2.2	5.28596	10/22	990	62	740	88.6	90.6	91.1	0.65	0.76	0.80	154
115	156		738	8.4	2.0	2.3		6/13		77	1485	88.0	90.0	91.2	0.88	0.90	0.92	198

Notes:
**Class "F" insulation with ΔT105K*
Standard voltage, connection and frequency: 220-240V Δ 50Hz 380-415V Δ 50Hz
380-415V Y 50Hz 660-690V Y 50Hz
The values shown are subject to change without prior notice. To obtain guaranteed values please access our website.

Smoke Extraction Motors Aluminium Frame - Two Speed - 200°C/2 hours Improved Efficiency EFF2 - Variable torque VIII/IV Pole - Dahlander Winding

Output		IEC Frame	Full load torque C_n (Nm)	Locked rotor current I_l/I_n	Locked rotor torque T_l/T_n	Break-down torque T_b/T_n	Inertia J kgm²	Allowable locked rotor time Hot/Cold (s)	Weight (kg)	Sound dB (A)	Rated speed (rpm)	400 V						Full load current I_n (A)
												% of full load						
												Efficiency η			Power Factor (Cos φ)			
kW	HP											50	75	100	50	75	100	
50Hz - 400V - VI/IV pole (1000/1500 rpm) - Y / Y connection																		
0.22	0.3	80	2.19	4.0	2.3	2.8	0.00346	11/24	12	48	960	37.0	46.0	52.0	0.41	0.50	0.56	1.09
0.32	0.43		2.07	5.2	2.1	2.6		6/13		54	1460	48.0	55.0	61.0	0.40	0.51	0.59	1.28
0.26	0.36	80	2.63	3.5	2.1	2.7	0.00346	12/26	12	48	960	37.0	46.0	52.0	0.43	0.52	0.60	1.20
0.4	0.54		2.60	5.0	1.8	2.9		8/18		54	1460	50.0	58.0	62.0	0.49	0.60	0.69	1.35
0.38	0.52	90S	3.77	6.2	2.4	3.3	0.00560	6/13	16	45	970	48.0	58.0	63.7	0.40	0.50	0.59	1.46
0.65	0.88		4.23	6.4	2.0	2.9		5/11		57	1460	61.5	68.0	72.3	0.52	0.64	0.74	1.75
0.55	0.75	90L	5.49	4.0	2.2	2.9	0.00672	12/26	20	45	960	52.0	60.0	65.0	0.41	0.52	0.61	2.00
0.9	1.22		5.95	5.6	2.0	2.8		5/11		57	1440	67.0	72.0	73.0	0.54	0.67	0.77	2.31
0.9	1.22	100L	9.07	4.7	2.2	2.4	0.01121	9/20	21	44	945	59.0	65.0	67.7	0.51	0.62	0.71	2.70
1.3	1.77		8.63	5.8	1.8	2.4		8/18		59	1440	69.5	72.0	72.4	0.61	0.72	0.81	3.20
1.1	1.5	100L	11.2	4.5	2.1	2.3	0.00925	9/20	25	44	940	65.0	69.0	69.2	0.48	0.61	0.74	3.10
1.7	2.3		11.2	6.0	2.0	2.7		5/11		59	1440	73.5	76.5	76.7	0.56	0.70	0.80	4.00
1.5	2	112M	14.5	5.8	2.6	3.0	0.01889	10/22	36	48	970	70.0	74.0	77.0	0.51	0.62	0.69	4.08
2.3	3.1		14.9	6.6	1.8	2.6		5/11		61	1460	73.0	76.0	78.0	0.63	0.75	0.81	5.25
2	2.7	132S	19.3	6.2	2.8	3.2	0.05072	9/20	68	52	985	63.0	70.0	73.0	0.45	0.57	0.66	5.99
3.1	4.2		20.2	7.8	2.2	2.9		12/26		65	1460	82.0	84.0	84.2	0.64	0.75	0.83	6.40
2.8	3.8	132M	27.1	7.9	2.5	2.9	0.06242	9/20	79	52	985	77.0	81.0	82.0	0.48	0.60	0.69	7.14
4.3	5.8		27.8	7.2	2.2	2.5		8/18		65	1465	80.0	81.0	82.0	0.70	0.80	0.85	8.90
4.3	5.8	160M	41.8	5.5	2.0	2.6	0.11565	8/18	96	56	975	79.0	80.0	81.0	0.59	0.74	0.82	9.34
6.6	8.97		42.7	6.9	2.0	3.0		5/11		68	1475	76.0	80.0	82.0	0.60	0.75	0.84	13.8
5.7	7.7	160L	55.5	5.7	2.0	2.6	0.14456	7/15	127	56	975	80.5	81.5	82.6	0.60	0.75	0.83	12.0
8.7	11.8		56.4	6.0	1.9	3.0		6/13		68	1470	79.2	82.5	83.4	0.67	0.80	0.87	17.3
9.5	12.9	180M[1)]	92.5	8.4	2.5	2.9	0.30532	5/11	179	56	980	86.0	86.5	87.0	0.78	0.86	0.87	18.1
14	19		90.8	8.6	2.1	3.0		5/11		71	1470	86.5	87.0	87.2	0.88	0.91	0.92	25.2
11	15	180L	108	6.5	2.0	2.2	0.33308	5/11	200	56	975	84.0	85.0	85.5	0.80	0.86	0.88	21.1
16.5	22.4		107	9.6	2.4	2.9		5/11		71	1470	86.5	87.5	88.0	0.85	0.90	0.93	29.1
16	21.7	200L	155	7.0	2.7	2.8	0.46939	8/18	280	58	985	88.0	89.5	90.0	0.64	0.75	0.81	31.7
24	32.6		155	7.0	2.3	2.6		10/22		74	1475	88.5	90.0	90.0	0.80	0.87	0.89	43.2
21	28.5	225S/M	202	7.0	2.8	3.0	0.77479	7/15	379	61	990	84.0	87.0	88.3	0.55	0.68	0.78	44.0
31	42		198	7.7	2.5	3.3		7/15		76	1490	85.0	87.5	88.5	0.70	0.80	0.86	58.8
25	34	225S/M	241	7.0	2.9	3.2	0.91566	7/15	469	61	990	85.0	87.0	88.0	0.52	0.66	0.74	55.4
37	50		237	8.1	2.4	3.2		7/15		76	1480	90.5	91.0	91.5	0.76	0.85	0.88	66.3
32	43.5	250S/M	309	6.8	2.7	3.4	1.16219	6/13	520	61	990	86.3	88.0	89.0	0.57	0.69	0.77	67.4
47	64		303	8.6	2.6	3.4		7/15		76	1485	90.0	91.5	92.0	0.76	0.85	0.88	83.8
45	60	280S/M	424	7.1	2.9	2.4	2.58594	11/24	685	66	995	87.0	89.0	90.0	0.60	0.70	0.75	96.2
66	90		426	8.5	2.5	3.0		11/24		81	1485	89.0	91.0	92.0	0.72	0.82	0.86	120
54	73	280S/M	518	7.1	3.0	2.5	3.07081	14/31	810	66	990	87.5	90.0	91.0	0.60	0.70	0.75	114
80	109		516	8.4	2.6	3.1		10/22		81	1485	89.5	91.5	92.5	0.75	0.83	0.86	145
62	84	315S/M	596	7.7	3.0	3.3	3.39405	11/24	898	69	990	85.0	88.5	90.0	0.56	0.67	0.72	138
92	126		596	8.5	2.8	2.9		9/20		81	1485	88.0	90.5	91.5	0.80	0.86	0.87	169
75	100	315S/M*	709	7.0	2.9	2.8	3.79811	5/11	1005	69	990	86.0	89.0	90.0	0.60	0.69	0.75	160
110	150		712	6.6	2.2	2.4		5/11		81	1480	89.0	91.0	92.0	0.81	0.86	0.88	196

[1)]For Pad Mounted, please consider frame size 180L.
[2)]Frame size 132M/L is not available for Pad Mounted.
For Pad Mounted version frame sizes up to 250S/M.

Smoke Extraction Motors Aluminium Frame - Single Speed - 300^{0}C/1 hour Improved Efficiency EFF2

Output		IEC Frame	Full load torque C_n (Nm)	Locked rotor current I_l/I_n	Locked rotor torque T_l/T_n	Break-down torque T_b/T_n	Inertia J kgm^2	Allowable locked rotor time Hot/Cold (s)	Weight (kg)	Sound dB (A)	Rated speed (rpm)	400 V						Full load current I_n (A)
												% of full load						
												Efficiency η			Power Factor (Cos φ)			
kW	HP											50	75	100	50	75	100	
II Pole - 3000 rpm																		
0.75	1	80	2.52	5.8	2.9	3.1	0.00079	25/55	14	59	2790	76.0	80.0	79.5	0.76	0.84	0.87	1.57
1.1	1.5	80	3.75	6.0	3.0	2.9	0.00090	13/29	15	59	2810	77.1	80.2	79.7	0.69	0.80	0.86	2.32
1.5	2	90S	4.89	6.8	2.8	3.0	0.00205	14/31	20	68	2870	81.4	83.7	83.6	0.71	0.81	0.86	3.01
2.2	3	90L	7.42	6.6	2.8	3.0	0.00242	9/20	22	68	2840	82.2	83.7	83.4	0.69	0.80	0.85	4.48
3	4	100L	9.76	7.2	2.6	2.8	0.00616	9/20	31	67	2880	83.2	85.7	85.6	0.77	0.85	0.88	5.75
4	5.5	112M	13.4	7.6	2.7	3.1	0.00842	15/33	42	64	2890	85.0	87.5	87.5	0.76	0.84	0.88	7.50
5.5	7.5	132S	18.0	8.0	2.7	3.2	0.02056	18/40	61	68	2935	84.0	87.1	88.3	0.73	0.82	0.87	10.3
7.5	10	132S	24.0	7.3	2.5	2.9	0.02430	10/22	67	68	2925	86.5	88.9	89.2	0.77	0.86	0.89	13.6
11	15	160M	35.8	8.3	2.6	3.1	0.04706	12/26	104	70	2945	87.8	90.1	90.3	0.77	0.85	0.88	20.0
15	20	160M	47.7	7.8	2.5	3.2	0.05295	10/22	111	70	2945	89.6	91.1	91.2	0.76	0.84	0.88	27.0
18.5	25	160L	59.6	8.2	2.6	3.3	0.06471	10/22	126	70	2945	90.4	91.9	91.7	0.77	0.85	0.88	33.1
22	30	180M[1)]	71.4	8.2	2.8	3.1	0.11351	13/29	172	70	2950	90.5	92.1	92.1	0.78	0.86	0.89	38.7
30	40	200L	94.8	7.5	2.8	2.8	0.20630	19/42	239	74	2965	90.0	92.0	92.7	0.77	0.85	0.88	53.1
37	50	200L	118	7.6	2.9	2.9	0.22424	19/42	253	74	2965	91.3	92.8	93.0	0.75	0.84	0.88	65.3
HIGH-OUTPUT DESIGN																		
1.5	2	80	5.07	6.0	3.0	2.7	0.00096	10/22	16	59	2770	77.0	78.5	77.7	0.70	0.82	0.87	3.20
2.2	3	90S	7.39	7.0	3.0	3.2	0.00230	8/18	21	68	2850	81.5	83.0	83.1	0.64	0.77	0.84	4.55
3	4	90L*	9.93	6.2	3.2	3.1	0.00266	6/13	24	68	2830	81.0	82.0	82.0	0.55	0.68	0.78	6.77
4	5.5	100L	13.5	7.5	2.9	3.1	0.00672	7/15	33	67	2870	81.0	82.3	82.5	0.72	0.81	0.86	8.14
5.5	7.5	112M	18.4	7.7	2.5	3.0	0.00995	10/22	45	64	2870	86.5	87.5	87.5	0.80	0.87	0.90	10.1
7.5	10	112M*	24.8	7.1	2.7	3.0	0.00995	8/18	45	64	2830	86.0	87.0	87.0	0.73	0.83	0.88	14.1
11	15	132M	36.0	7.2	2.4	3.2	0.03178	13/29	79	68	2925	90.0	90.6	90.2	0.76	0.84	0.88	20.0
22	30	160L*	71.9	7.5	2.5	3.0	0.06766	6/13	132	70	2930	90.0	90.6	90.7	0.72	0.82	0.86	40.7
30	40	180L*	95.4	8.7	2.5	3.1	0.13622	9/20	197	70	2945	92.0	92.7	92.7	0.74	0.83	0.87	53.7
IV Pole - 1500 rpm																		
0.55	0.75	80	3.68	6.0	2.6	2.8	0.00242	17/37	14	44	1430	69.0	73.0	75.0	0.56	0.69	0.78	1.36
0.75	1	80	4.96	5.5	2.4	2.6	0.00294	14/31	15	44	1415	73.5	76.2	76.2	0.62	0.74	0.83	1.71
1.1	1.5	90S	7.32	6.5	3.0	3.0	0.00504	13/29	21	47	1440	76.0	80.0	80.6	0.57	0.69	0.78	2.53
1.5	2	90L	9.89	6.2	2.7	2.7	0.00672	12/26	24	47	1420	80.3	82.0	81.7	0.64	0.77	0.83	3.19
2.2	3	100L	14.8	6.7	2.7	2.9	0.00842	14/31	30	51	1420	81.0	82.3	83.0	0.65	0.78	0.83	4.61
3	4	100L	19.9	6.5	2.7	2.7	0.00995	10/22	33	51	1410	83.6	85.0	84.7	0.68	0.79	0.86	5.94
4	5.5	112M	27.0	7.5	2.7	2.8	0.01875	12/26	47	55	1430	86.0	87.4	87.1	0.70	0.81	0.87	7.62
5.5	7.5	132S	36.0	8.0	2.4	3.0	0.04652	11/24	61	58	1465	85.4	87.7	88.5	0.68	0.79	0.85	10.6
7.5	10	132M	48.0	8.0	2.5	2.8	0.05427	8/18	69	58	1465	86.4	88.4	88.6	0.70	0.80	0.86	14.2
11	15	160M	72.4	6.0	2.2	2.5	0.08029	16/35	106	62	1455	87.6	89.4	89.9	0.70	0.79	0.84	21.0
15	20	160L	96.6	6.0	2.2	2.4	0.10037	13/29	121	62	1455	89.0	90.4	90.6	0.71	0.80	0.84	28.4
18.5	25	180M1)	119	7.0	2.7	2.8	0.17939	18/40	174	64	1470	89.8	91.5	92.1	0.68	0.79	0.84	34.5
22	30	180L	143	7.5	2.8	2.8	0.19733	14/31	185	64	1470	91.0	92.2	92.4	0.67	0.78	0.83	41.4
30	40	200L	190	6.5	2.2	2.5	0.33095	17/37	248	67	1475	91.8	93.0	93.0	0.75	0.82	0.85	54.8
37	50	225S/M	237	7.2	2.3	2.7	0.62988	20/44	347	70	1480	91.2	92.2	92.8	0.76	0.85	0.88	65.4
45	60	225S/M	286	7.0	2.3	2.7	0.76985	16/35	379	70	1475	91.0	92.9	93.5	0.76	0.85	0.88	78.9
55	75	250S/M	357	7.5	2.3	2.6	0.97981	16/35	446	70	1475	92.7	93.1	93.4	0.80	0.87	0.90	94.4
75	100	280S/M	473	6.7	2.1	2.4	2.32858	44/97	720	74	1485	92.4	93.8	94.3	0.83	0.88	0.90	128
90	125	280S/M	591	7.1	2.4	2.5	2.56947	31/68	756	74	1485	92.3	93.9	94.2	0.82	0.87	0.89	155
110	150	315S/M	709	7.1	2.3	2.6	2.81036	27/59	857	77	1485	92.8	94.4	94.4	0.78	0.85	0.88	191
132	175	315S/M	828	7.3	2.5	2.6	3.77391	31/68	1007	77	1485	93.3	94.7	95.1	0.78	0.85	0.88	228
160	220	315S/M	1044	7.0	2.4	2.7	3.77391	22/48	994	77	1480	93.3	95.1	95.5	0.78	0.85	0.87	278
200	270	355M/L	1273	6.6	2.3	2.2	7.45663	44/97	1525	79	1490	94.0	95.0	95.2	0.82	0.86	0.88	345
250	340	355M/L	1603	6.9	2.2	2.5	8.38871	36/79	1651	79	1490	94.3	95.2	95.8	0.80	0.86	0.88	428
315	430	355M/L	2027	6.7	2.2	2.4	10.2529	42/92	1835	79	1490	94.8	95.9	96.2	0.79	0.86	0.89	531
330	450	355M/L	2121	6.5	2.3	2.3	11.1850	32/70	1865	79	1490	95.0	96.0	96.2	0.83	0.88	0.90	550
HIGH-OUTPUT DESIGN																		
1.1	1.5	80	7.61	5.0	2.3	2.3	0.00328	10/22	15	44	1385	65.0	68.5	69.0	0.55	0.70	0.81	2.84
1.5	2	90S	10.0	5.8	2.6	2.6	0.00504	8/18	21	47	1405	73.0	75.0	76.2	0.62	0.76	0.82	3.46
2.2	3	90L*	14.9	5.8	2.7	2.5	0.00672	8/18	24	47	1410	75.0	76.5	76.5	0.57	0.71	0.80	5.19
5.5	7.5	112M*	36.3	6.5	2.5	2.6	0.01875	8/18	47	55	1450	84.0	85.7	85.7	0.54	0.66	0.75	12.4
7.5	10	132S	48.0	8.0	2.5	2.8	0.05427	8/18	63	58	1465	86.4	88.4	88.6	0.70	0.80	0.86	14.2
15	20	160M	96.6	6.0	2.2	2.4	0.10037	13/29	119	62	1455	89.0	90.4	90.6	0.71	0.80	0.84	28.4
18.5	25	160L*	121	6.0	2.4	2.4	0.11542	12/26	128	62	1455	88.5	90.0	90.0	0.64	0.76	0.82	36.2
37	50	200L	239	7.0	2.3	2.5	0.38611	14/31	269	67	1470	91.5	92.5	92.3	0.73	0.82	0.86	67.3
55	75	225S/M	357	7.5	2.3	2.6	0.97981	16/35	423	70	1475	92.7	93.1	93.4	0.80	0.87	0.90	94.4
75	100	250S/M	475	7.2	2.4	2.6	1.15478	12/26	488	70	1480	92.5	93.6	93.7	0.77	0.85	0.87	133
110	150	280S/M	709	7.1	2.3	2.6	2.81036	27/59	793	77	1485	92.8	94.4	94.4	0.78	0.85	0.88	191
132	175	280S/M	828	7.5	2.3	2.6	3.37243	13/29	940	74	1485	93.0	94.0	94.6	0.78	0.85	0.88	229
200	270	315S/M*	1281	6.7	2.3	2.6	3.77391	17/37	1011	77	1480	94.2	94.8	95.4	0.74	0.82	0.85	356

Notes:
**Class "F" insulation with ΔT105K*
Standard voltage, connection and frequency: 220-240V Δ 50Hz *380-415V Δ 50Hz*
380-415V Y 50Hz *660-690V Y 50Hz*
The values shown are subject to change without prior notice. To obtain guaranteed values please access our website.

Smoke Extraction Motors Aluminium Frame - Single Speed - 300^{0}C/1 hour Improved Efficiency EFF2

Output		380 V								415 V							
		Rated speed (rpm)	% of full load						Full load current I_n (A)	Rated speed (rpm)	% of full load						Full load current I_n (A)
			Efficiency η			Power Factor (Cos φ)					Efficiency η			Power Factor (Cos φ)			
kW	HP		50	75	100	50	75	100			50	75	100	50	75	100	
II Pole - 3000 rpm																	
0.75	1	2770	76.5	79.7	78.5	0.79	0.86	0.89	1.63	2810	75.5	80.1	80.0	0.73	0.82	0.86	1.52
1.1	1.5	2790	78.2	80.4	79.3	0.74	0.84	0.88	2.39	2825	76.0	79.8	79.8	0.64	0.76	0.84	2.28
1.5	2	2855	81.8	83.8	83.0	0.75	0.84	0.88	3.12	2880	80.0	83.7	83.8	0.67	0.78	0.84	2.96
2.2	3	2820	82.8	83.6	83.3	0.75	0.84	0.87	4.61	2850	81.5	83.6	84.3	0.64	0.76	0.83	4.37
3	4	2870	83.5	85.6	85.1	0.80	0.86	0.89	6.02	2890	82.8	85.6	85.6	0.74	0.84	0.87	5.60
4	5.5	2880	85.5	87.5	87.2	0.80	0.86	0.89	7.83	2900	84.5	87.4	88.2	0.72	0.82	0.87	7.25
5.5	7.5	2930	84.5	87.5	88.2	0.77	0.85	0.89	10.6	2940	83.5	86.8	88.2	0.69	0.80	0.85	10.2
7.5	10	2915	87.0	89.0	88.8	0.81	0.87	0.90	14.3	2930	86.0	88.8	89.3	0.73	0.83	0.87	13.4
11	15	2940	88.3	90.1	90.2	0.80	0.86	0.89	20.8	2950	87.3	90.0	90.4	0.74	0.83	0.87	19.5
15	20	2935	90.1	91.2	91.0	0.81	0.87	0.89	28.1	2950	89.1	91.0	91.2	0.72	0.81	0.87	26.3
18.5	25	2940	90.7	92.0	91.5	0.81	0.87	0.89	34.5	2950	90.1	91.8	92.0	0.73	0.83	0.86	32.5
22	30	2945	91.0	92.1	92.0	0.82	0.88	0.90	40.4	2955	90.0	92.0	92.1	0.75	0.84	0.87	38.2
30	40	2960	90.5	92.1	92.6	0.80	0.87	0.89	55.3	2970	89.5	91.8	92.7	0.73	0.83	0.87	51.8
37	50	2960	91.7	93.0	93.0	0.80	0.87	0.89	67.9	2965	90.8	92.6	93.0	0.70	0.81	0.86	64.4
HIGH-OUTPUT DESIGN																	
1.5	2	2750	78.0	78.5	76.5	0.75	0.85	0.89	3.35	2790	76.0	78.5	78.5	0.65	0.78	0.85	3.13
2.2	3	2830	82.3	83.3	83.0	0.71	0.82	0.87	4.63	2860	80.2	82.5	83.1	0.58	0.72	0.80	4.60
3	4	2800	82.0	82.5	81.5	0.61	0.74	0.81	6.90	2845	80.0	81.5	81.5	0.50	0.64	0.74	6.92
4	5.5	2850	81.5	82.5	82.0	0.77	0.84	0.88	8.42	2890	80.3	82.0	82.5	0.68	0.78	0.84	8.03
5.5	7.5	2860	87.0	87.5	87.2	0.83	0.89	0.91	10.5	2880	86.0	87.5	87.7	0.77	0.85	0.89	9.80
7.5	10	2815	86.5	87.0	86.5	0.79	0.87	0.90	14.6	2840	85.5	87.0	87.0	0.68	0.80	0.86	13.9
11	15	2920	89.5	90.8	90.2	0.80	0.87	0.90	20.6	2930	89.3	90.5	90.2	0.72	0.82	0.86	19.7
22	30	2925	90.5	90.7	90.5	0.77	0.85	0.88	42.0	2935	89.5	90.5	90.7	0.68	0.79	0.84	40.2
30	40	2940	92.0	92.3	92.3	0.78	0.84	0.88	56.1	2950	92.0	92.7	92.7	0.71	0.80	0.85	53.0
IV POLE - 1500 RPM																	
0.55	0.75	1420	70.0	73.5	75.0	0.61	0.73	0.81	1.38	1440	67.0	72.5	74.6	0.53	0.66	0.75	1.37
0.75	1	1400	75.0	76.5	76.0	0.66	0.78	0.85	1.76	1430	72.0	76.0	76.2	0.59	0.71	0.81	1.69
1.1	1.5	1420	77.5	80.5	80.5	0.63	0.74	0.81	2.56	1445	74.5	79.0	80.3	0.53	0.64	0.74	2.58
1.5	2	1410	81.2	82.2	81.0	0.68	0.80	0.85	3.31	1430	79.3	81.5	81.8	0.61	0.74	0.81	3.15
2.2	3	1410	81.5	82.0	81.7	0.69	0.81	0.85	4.81	1430	80.5	82.3	83.0	0.61	0.75	0.81	4.55
3	4	1400	84.0	84.9	84.2	0.72	0.82	0.87	6.22	1420	83.2	85.1	84.9	0.65	0.77	0.84	5.85
4	5.5	1420	86.5	87.5	86.7	0.74	0.84	0.89	7.88	1440	85.2	87.2	86.7	0.67	0.78	0.84	7.64
5.5	7.5	1460	86.7	88.3	88.3	0.73	0.82	0.87	10.9	1470	84.2	87.0	88.4	0.64	0.75	0.83	10.4
7.5	10	1465	87.0	88.6	88.4	0.75	0.84	0.88	14.6	1470	85.6	88.0	88.6	0.65	0.77	0.83	14.2
11	15	1450	88.3	89.6	89.2	0.74	0.82	0.85	22.0	1460	86.8	89.0	89.8	0.65	0.76	0.82	20.8
15	20	1450	89.5	90.5	90.1	0.75	0.83	0.86	29.4	1460	88.4	90.3	90.6	0.67	0.78	0.83	27.8
18.5	25	1465	90.3	91.7	91.7	0.72	0.81	0.85	36.1	1470	89.3	91.3	92.1	0.65	0.76	0.82	34.1
22	30	1465	91.5	92.4	92.3	0.72	0.81	0.85	42.6	1475	90.5	92.0	92.5	0.63	0.75	0.81	40.8
30	40	1470	92.2	93.0	92.6	0.78	0.84	0.86	57.2	1480	91.5	93.0	93.2	0.72	0.80	0.84	53.3
37	50	1475	91.6	92.4	92.5	0.79	0.86	0.89	68.3	1480	90.8	92.1	92.9	0.72	0.83	0.87	63.7
45	60	1475	91.3	92.8	93.5	0.80	0.87	0.89	82.2	1480	91.0	92.9	93.5	0.72	0.83	0.87	77.0
55	75	1475	92.8	93.5	93.4	0.83	0.88	0.91	98.3	1480	92.5	93.4	93.6	0.77	0.85	0.89	91.9
75	100	1480	92.8	93.9	94.2	0.85	0.89	0.90	134	1485	92.2	93.8	94.3	0.81	0.87	0.89	124
90	125	1480	92.6	94.1	94.2	0.84	0.88	0.90	161	1485	92.0	93.9	94.2	0.80	0.86	0.89	149
110	150	1480	92.8	93.6	94.2	0.80	0.86	0.88	202	1485	92.8	94.4	94.5	0.76	0.83	0.87	186
132	175	1480	93.5	94.9	95.1	0.81	0.86	0.89	237	1485	93.3	94.7	95.1	0.76	0.84	0.87	222
160	220	1480	93.0	95.0	95.4	0.81	0.86	0.88	290	1485	94.2	95.1	95.5	0.77	0.84	0.87	268
200	270	1485	94.2	95.0	95.1	0.84	0.87	0.89	359	1490	93.8	94.9	95.1	0.80	0.85	0.87	336
250	340	1485	94.5	95.2	95.7	0.82	0.87	0.89	446	1490	94.1	95.0	95.7	0.77	0.85	0.87	418
315	430	1485	95.0	95.8	96.1	0.83	0.87	0.89	560	1490	94.5	95.8	96.2	0.76	0.84	0.88	518
330	450	1485	95.2	96.0	96.1	0.85	0.89	0.90	580	1490	94.8	95.8	96.2	0.81	0.87	0.89	536
HIGH-OUTPUT DESIGN																	
1.1	1.5	1370	68.0	69.0	69.5	0.61	0.76	0.86	2.80	1400	60.0	66.0	67.0	0.50	0.65	0.76	3.01
1.5	2	1385	72.0	74.0	75.0	0.68	0.80	0.85	3.57	1410	73.0	74.5	75.5	0.58	0.72	0.80	3.45
2.2	3	1390	76.0	77.0	76.0	0.65	0.75	0.83	5.30	1420	73.0	76.0	76.5	0.53	0.66	0.76	5.26
5.5	7.5	1445	85.0	86.0	85.7	0.60	0.72	0.79	12.3	1455	82.0	85.7	85.7	0.49	0.62	0.71	12.6
7.5	10	1465	87.0	88.6	88.4	0.75	0.84	0.88	14.6	1470	85.6	88.0	88.6	0.65	0.77	0.83	14.2
15	20	1450	89.5	90.5	90.1	0.75	0.83	0.86	29.4	1460	88.4	90.3	90.6	0.67	0.78	0.83	27.8
18.5	25	1450	89.0	90.0	89.4	0.70	0.80	0.84	37.4	1460	88.0	90.0	90.0	0.60	0.73	0.80	35.7
37	50	1465	92.0	92.5	92.0	0.77	0.84	0.87	70.2	1475	91.0	92.5	92.5	0.69	0.80	0.85	65.5
55	75	1475	92.8	93.5	93.4	0.83	0.88	0.91	98.3	1480	92.5	93.4	93.6	0.77	0.85	0.89	91.9
75	100	1475	92.6	93.4	93.5	0.80	0.86	0.88	138	1480	92.6	93.7	93.6	0.74	0.84	0.87	128
110	150	1480	92.8	93.6	94.2	0.80	0.86	0.88	202	1485	92.8	94.4	94.5	0.76	0.83	0.87	186
132	175	1480	92.5	93.5	93.5	0.81	0.86	0.89	241	1485	92.2	94.7	94.7	0.76	0.84	0.87	223
200	270	1480	94.5	95.0	95.4	0.78	0.84	0.86	370	1485	93.8	94.6	95.4	0.70	0.80	0.84	347

[1)]For Pad Mounted, please consider frame size 180L.
[2)]Frame size 132M/L is not available for Pad Mounted.
For Pad Mounted version frame sizes up to 250S/M.

Smoke Extraction Motors Aluminium Frame - Single Speed - 300^{0}C/1 hour Improved Efficiency EFF2

Output		IEC Frame	Full load torque C_n (Nm)	Locked rotor current I_l/I_n	Locked rotor torque T_l/T_n	Break-down torque T_b/T_n	Inertia J kgm^2	Allowable locked rotor time Hot/Cold (s)	Weight (kg)	Sound dB (A)	Rated speed (rpm)	400 V						Full load current I_n (A)
												% of full load						
												Efficiency η			Power Factor (Cos φ)			
kW	HP											50	75	100	50	75	100	
VI Pole - 1000 rpm																		
0.25	0.33	80	2.44	4.6	2.5	2.9	0.00225	19/42	14	43	950	52.0	60.0	64.0	0.44	0.55	0.65	0.867
0.37	0.5	80	3.78	4.5	2.5	2.5	0.00242	12/26	14	43	930	54.0	62.5	65.0	0.45	0.57	0.67	1.23
0.55	0.75	80	5.66	4.5	2.3	2.3	0.00311	10/22	15	43	930	60.0	65.0	67.0	0.50	0.63	0.73	1.62
0.75	1	90S	7.63	4.8	2.1	2.1	0.00504	16/35	20	45	920	70.0	72.6	72.4	0.54	0.67	0.76	1.97
1.1	1.5	90L	11.4	4.8	2.3	2.2	0.00672	14/31	24	45	925	71.0	75.2	75.2	0.50	0.64	0.75	2.82
1.5	2	100L	14.9	4.8	2.2	2.5	0.01121	18/40	27	44	940	74.0	77.3	77.5	0.53	0.66	0.74	3.78
2.2	3	112M	22.4	5.0	2.2	2.3	0.01682	14/31	38	48	940	77.5	80.5	80.1	0.53	0.66	0.74	5.36
3	4	132S	29.3	5.3	2.0	2.2	0.03489	20/44	52	52	960	80.0	82.7	82.5	0.58	0.70	0.77	6.82
4	5.5	132M	40.2	6.0	2.1	2.3	0.05039	18/40	66	52	960	83.6	85.5	85.8	0.59	0.70	0.77	8.74
5.5	7.5	132M	54.9	6.4	2.2	2.4	0.06202	14/31	73	52	960	84.0	85.8	85.8	0.56	0.68	0.76	12.2
7.5	10	160M	72.4	6.1	2.3	2.6	0.12209	17/37	105	56	970	87.0	88.2	88.0	0.62	0.74	0.81	15.2
11	15	160L	109	6.6	2.4	2.9	0.17595	13/29	130	56	970	87.2	88.3	88.3	0.62	0.75	0.82	21.9
15	20	180L	146	7.5	2.5	2.6	0.30337	11/24	182	56	965	89.1	90.1	89.8	0.82	0.88	0.91	26.5
18.5	25	200L	180	6.0	2.3	2.5	0.37670	33/73	232	58	975	89.3	90.5	89.9	0.70	0.79	0.84	35.4
22	30	200L	216	6.0	2.3	2.4	0.41258	33/73	241	58	975	89.0	90.9	91.3	0.70	0.79	0.84	41.4
30	40	225S/M	285	7.2	2.6	2.7	0.98842	20/44	367	61	985	90.5	91.8	91.8	0.77	0.84	0.87	54.2
37	50	250S/M	358	7.5	2.7	2.6	1.22377	18/40	429	61	980	90.0	92.4	92.5	0.76	0.84	0.87	66.4
45	60	280S/M	428	6.8	2.4	2.6	2.29824	24/53	599	66	985	90.5	92.3	92.6	0.68	0.78	0.83	84.5
55	75	280S/M	535	6.5	2.3	2.5	2.64298	23/51	637	66	985	91.6	93.2	93.5	0.71	0.82	0.85	100
75	100	315S/M	713	6.7	2.3	2.5	3.44737	20/44	788	69	985	91.6	93.5	93.7	0.71	0.81	0.85	136
90	125	315S/M	891	6.3	2.1	2.3	3.67719	18/40	813	69	985	92.5	94.0	93.9	0.73	0.81	0.85	163
110	150	315S/M	1070	6.4	2.3	2.4	5.28596	18/40	988	69	985	93.4	94.5	94.6	0.71	0.80	0.84	200
132	175	355M/L	1242	6.1	2.0	2.3	8.10159	90/198	1100	73	990	92.5	94.7	94.7	0.65	0.75	0.80	251
200	270	355M/L	1916	6.3	2.1	2.3	12.3907	85/187	1754	73	990	93.5	94.5	94.8	0.70	0.78	0.81	376
250	340	355M/L	2400	6.1	2.2	2.2	14.7735	64/141	1916	73	995	94.0	95.1	95.6	0.70	0.79	0.82	460
315	430	355M/L*	3051	6.0	1.9	1.9	15.4883	38/84	1979	73	990	94.3	95.8	95.9	0.69	0.78	0.81	585
HIGH-OUTPUT DESIGN																		
3	4	112M	29.3	6.3	2.6	2.6	0.02617	10/22	45	48	960	78.5	81.7	84.0	0.53	0.65	0.73	7.06
4	5.5	132S	40.2	6.0	2.1	2.3	0.05039	18/40	62	52	960	83.6	85.5	85.8	0.59	0.70	0.77	8.74
45	60	250S/M	430	8.0	2.8	2.8	1.55324	18/40	486	61	980	91.0	92.3	92.6	0.78	0.85	0.88	79.7
75	100	280S/M	713	6.7	2.3	2.5	3.44737	20/44	726	69	985	91.6	93.5	93.7	0.71	0.81	0.85	136
132	175	315S/M*	1248	6.3	2.1	2.2	5.28596	13/29	986	69	985	93.5	94.7	94.7	0.72	0.81	0.85	237
VIII Pole - 750 rpm																		
0.18	0.25	80	2.51	3.1	1.9	2.1	0.00242	16/35	14	42	700	40.0	49.0	54.2	0.43	0.53	0.62	0.77
0.25	0.33	80	3.41	3.0	1.8	1.8	0.00294	21/46	15	42	680	47.5	55.0	57.0	0.45	0.56	0.65	0.97
0.37	0.5	90S	5.05	3.5	2.1	2.1	0.00448	29/64	19	43	695	51.0	59.0	61.0	0.43	0.53	0.64	1.37
0.55	0.75	90L	7.63	3.5	2.1	2.1	0.00616	21/46	22	43	690	57.0	63.0	65.0	0.45	0.56	0.65	1.88
0.75	1	100L	9.96	4.2	2.0	2.1	0.00952	30/66	26	50	705	65.0	70.0	71.0	0.42	0.54	0.63	2.42
1.1	1.5	100L	15.1	4.1	1.7	2.1	0.01289	23/51	30	50	700	66.0	71.5	72.2	0.43	0.56	0.65	3.38
1.5	2	112M	19.8	4.6	2.5	2.7	0.02430	32/70	44	46	710	76.5	77.8	78.0	0.48	0.60	0.69	4.02
2.2	3	132S	29.5	6.2	2.4	2.7	0.07527	23/51	68	48	715	78.5	81.5	82.5	0.53	0.65	0.73	5.27
3	4	132M	39.6	5.8	2.4	2.7	0.08531	22/48	75	48	710	78.0	82.7	83.5	0.52	0.64	0.72	7.20
4	5.5	160M	52.9	5.2	2.2	2.7	0.12209	33/73	105	51	730	81.3	84.3	86.0	0.47	0.60	0.69	9.73
5.5	7.5	160M	72.2	5.2	2.3	2.7	0.14364	23/51	114	51	730	81.5	84.1	85.2	0.46	0.59	0.69	13.5
7.5	10	160L	96.9	4.9	2.0	2.5	0.16518	15/33	125	51	725	83.5	85.7	85.5	0.51	0.63	0.72	17.6
11	15	180L	145	6.8	2.3	2.5	0.30337	12/26	173	51	725	87.0	88.5	88.3	0.70	0.79	0.84	21.4
15	20	200L	192	4.6	2.0	2.1	0.37670	36/79	229	53	730	86.5	88.6	89.0	0.56	0.68	0.75	32.4
18.5	25	225S/M	241	6.9	2.1	2.8	0.84722	17/37	339	56	730	88.5	90.1	90.0	0.72	0.80	0.85	34.9
22	30	225S/M	289	7.5	2.2	2.7	0.98842	19/42	364	56	730	89.0	91.0	91.0	0.73	0.82	0.85	41.1
30	40	250S/M	385	7.9	2.3	2.9	1.22377	17/37	425	56	730	89.5	91.2	91.6	0.70	0.79	0.84	56.3
37	50	280S/M	475	6.5	1.9	2.3	2.29824	29/64	589	59	740	90.5	92.2	92.3	0.67	0.77	0.81	71.4
45	60	280S/M	570	6.5	2.0	2.4	2.64298	26/57	631	59	740	90.5	92.1	92.3	0.65	0.75	0.80	88.0
55	75	315S/M	712	6.5	1.9	2.2	3.10263	27/59	732	62	740	91.2	93.1	93.0	0.69	0.78	0.82	104
75	100	315S/M	949	6.6	1.9	2.2	4.36666	20/44	872	62	740	92.0	93.4	93.5	0.67	0.79	0.82	141
90	125	315S/M	1186	6.8	2.1	2.4	5.28596	23/51	1021	62	740	92.5	93.8	94.2	0.70	0.78	0.83	166
110	150	355M/L	1424	6.4	1.5	2.2	11.9324	41/90	1390	70	740	92.5	94.1	94.5	0.63	0.74	0.80	210
132	175	355M/L	1661	6.5	1.6	2.2	13.1885	47/103	1445	70	740	93.0	94.5	94.8	0.63	0.73	0.79	254
160	220	355M/L	2088	6.6	1.6	2.2	16.3286	42/92	1620	70	740	93.3	94.7	94.7	0.64	0.75	0.80	305
200	270	355M/L	2563	6.8	1.6	2.1	19.4687	37/81	1800	70	740	93.3	94.6	95.2	0.60	0.72	0.79	384
HIGH-OUTPUT DESIGN																		
7.5	10	160M	96.9	4.9	2.0	2.5	0.16518	15/33	123	51	725	83.5	85.7	85.5	0.51	0.63	0.72	17.6
37	50	250S/M	481	8.2	2.3	2.8	1.55324	13/29	479	56	730	89.0	91.5	91.5	0.68	0.78	0.84	69.5
55	75	280S/M	712	6.5	1.9	2.2	3.10263	27/59	696	62	740	91.2	93.1	93.0	0.69	0.78	0.82	104
110	150	315S/M*	1424	7.0	1.9	2.2	5.63070	14/31	970	62	740	92.5	94.1	94.9	0.61	0.73	0.79	212

Notes:
**Class "F" insulation with ΔT105K*
Standard voltage, connection and frequency: 220-240V Δ 50Hz — 380-415V Δ 50Hz
380-415V Y 50Hz — 660-690V Y 50Hz
The values shown are subject to change without prior notice. To obtain guaranteed values please access our website.

Smoke Extraction Motors Aluminium Frame - Single Speed - 300^{0}C/1 hour Improved Efficiency EFF2

Output		380 V								415 V							
		Rated speed (rpm)	% of full load						Full load current I_n (A)	Rated speed (rpm)	% of full load						Full load current I_n (A)
			Efficiency η			Power Factor (Cos φ)					Efficiency η			Power Factor (Cos φ)			
kW	HP		50	75	100	50	75	100			50	75	100	50	75	100	
VI Pole - 1000 rpm																	
0.25	0.33	945	54.0	62.0	65.0	0.47	0.59	0.68	0.86	955	50.0	58.0	63.0	0.41	0.51	0.62	0.89
0.37	0.5	920	56.0	64.0	66.0	0.49	0.62	0.72	1.18	935	52.0	61.0	64.0	0.42	0.54	0.64	1.26
0.55	0.75	920	62.0	65.8	68.0	0.54	0.67	0.77	1.60	935	58.0	64.0	66.0	0.47	0.59	0.68	1.70
0.75	1	910	71.5	72.8	71.5	0.58	0.71	0.79	2.02	930	68.5	72.4	72.4	0.50	0.64	0.73	1.97
1.1	1.5	915	72.0	75.5	74.8	0.55	0.69	0.78	2.86	935	70.0	75.2	75.2	0.46	0.61	0.72	2.83
1.5	2	930	75.0	77.5	77.0	0.58	0.70	0.76	3.89	950	73.0	77.3	77.6	0.50	0.63	0.71	3.79
2.2	3	930	79.0	80.8	79.7	0.58	0.70	0.76	5.52	950	76.0	80.3	80.5	0.50	0.63	0.72	5.28
3	4	955	81.0	83.0	82.0	0.61	0.72	0.79	7.04	965	79.0	82.5	82.6	0.53	0.66	0.74	6.83
4	5.5	955	84.5	85.7	85.4	0.61	0.72	0.79	9.01	965	82.6	85.3	85.9	0.56	0.67	0.75	8.64
5.5	7.5	955	85.0	86.1	85.6	0.58	0.71	0.77	12.7	965	83.0	85.5	86.0	0.53	0.65	0.74	12.0
7.5	10	965	87.5	88.4	87.5	0.66	0.78	0.83	15.7	970	86.5	88.0	88.0	0.58	0.71	0.79	15.0
11	15	970	88.0	88.5	88.0	0.67	0.78	0.84	22.6	975	86.5	88.0	88.3	0.58	0.72	0.80	21.7
15	20	960	89.0	90.0	89.5	0.84	0.89	0.91	28.0	970	89.0	90.5	90.5	0.80	0.87	0.90	25.6
18.5	25	970	89.7	90.7	89.8	0.74	0.82	0.86	36.4	980	88.9	90.3	91.2	0.66	0.76	0.82	34.4
22	30	970	89.6	91.0	91.2	0.74	0.82	0.85	43.1	980	88.4	90.7	91.3	0.66	0.76	0.82	40.9
30	40	980	91.0	91.8	91.6	0.80	0.86	0.88	56.5	985	90.0	91.8	92.2	0.73	0.81	0.86	52.6
37	50	980	90.5	92.5	92.4	0.80	0.86	0.88	69.1	985	89.5	92.4	92.6	0.73	0.82	0.86	64.6
45	60	985	91.0	92.3	92.6	0.72	0.81	0.85	86.9	990	90.0	92.3	92.7	0.64	0.76	0.82	82.4
55	75	985	92.0	93.2	93.4	0.74	0.84	0.87	103	990	91.2	93.2	93.6	0.68	0.80	0.84	97.3
75	100	985	92.0	93.5	93.5	0.74	0.82	0.86	142	990	91.2	93.5	93.8	0.69	0.80	0.84	132
90	125	985	92.8	93.9	93.6	0.75	0.83	0.86	170	990	92.2	93.9	93.9	0.71	0.79	0.84	159
110	150	985	93.6	94.4	94.4	0.74	0.82	0.85	208	985	93.2	94.5	94.7	0.69	0.79	0.83	195
132	175	990	93.0	94.7	94.5	0.70	0.80	0.82	259	995	92.0	94.7	94.7	0.60	0.70	0.77	252
200	270	990	94.0	94.7	94.8	0.74	0.81	0.83	386	990	93.0	94.3	94.8	0.66	0.75	0.79	372
250	340	995	94.3	95.2	95.5	0.74	0.81	0.83	479	995	93.7	95.0	95.8	0.67	0.77	0.81	448
315	430	985	94.8	96.0	95.8	0.73	0.80	0.82	609	990	93.8	95.6	95.8	0.65	0.76	0.80	572
HIGH-OUTPUT DESIGN																	
3	4	955	80.0	82.0	83.9	0.59	0.70	0.76	7.15	965	76.5	81.4	84	0.48	0.6	0.69	7.20
4	5.5	955	84.5	85.7	85.4	0.61	0.72	0.79	9.01	965	82.6	85.3	85.9	0.56	0.67	0.75	8.64
45	60	980	91.5	92.3	92.5	0.82	0.87	0.89	83.0	985	90.5	92.3	92.7	0.75	0.83	0.87	77.6
75	100	985	92.0	93.5	93.5	0.74	0.82	0.86	142	990	91.2	93.5	93.8	0.69	0.8	0.84	132
132	175	980	93.7	94.5	94.4	0.75	0.83	0.86	247	985	93.3	94.7	94.7	0.70	0.80	0.84	231
VIII Pole - 750 rpm																	
0.18	0.25	690	43.0	52.0	54.5	0.45	0.56	0.65	0.77	710	37.0	46.0	53.0	0.41	0.50	0.59	0.80
0.25	0.33	670	50.5	56.5	56.5	0.48	0.59	0.69	0.97	690	45.0	53.5	56.5	0.42	0.53	0.61	1.01
0.37	0.5	685	54.0	61.0	62.0	0.46	0.56	0.67	1.35	700	48.0	57.0	60.0	0.40	0.50	0.60	1.43
0.55	0.75	680	59.0	64.5	65.5	0.48	0.59	0.69	1.85	700	55.0	61.5	64.5	0.41	0.52	0.61	1.94
0.75	1	695	67.0	71.0	70.5	0.46	0.58	0.66	2.45	710	63.0	69.0	70.5	0.38	0.50	0.60	2.47
1.1	1.5	690	68.0	72.0	72.0	0.47	0.60	0.68	3.41	710	64.0	70.5	72.2	0.40	0.52	0.62	3.42
1.5	2	700	77.5	78.0	77.7	0.52	0.63	0.70	4.19	715	74.5	77.0	78.1	0.46	0.58	0.66	4.05
2.2	3	710	79.5	81.8	82.1	0.56	0.68	0.75	5.43	720	77.5	81.2	82.6	0.50	0.62	0.71	5.22
3	4	705	79.5	83.0	83.0	0.54	0.66	0.74	7.42	715	76.5	82.4	83.5	0.50	0.62	0.70	7.14
4	5.5	725	82.6	84.8	85.9	0.51	0.64	0.72	9.83	730	80.0	83.7	86.0	0.44	0.57	0.66	9.80
5.5	7.5	725	82.5	84.7	85.2	0.50	0.63	0.72	13.6	730	80.5	83.5	85.0	0.42	0.55	0.66	13.6
7.5	10	720	84.5	86.0	85.3	0.54	0.66	0.74	18.1	730	82.5	85.5	85.5	0.48	0.60	0.70	17.4
11	15	720	87.5	88.3	87.8	0.74	0.81	0.85	22.4	730	86.5	88.6	88.5	0.66	0.77	0.83	20.8
15	20	725	87.5	88.9	88.9	0.61	0.72	0.77	33.3	730	85.5	88.3	88.9	0.50	0.64	0.72	32.6
18.5	25	730	88.8	90.0	89.8	0.75	0.83	0.86	36.4	735	88.2	90.3	90.2	0.68	0.78	0.84	34.0
22	30	730	89.4	90.9	90.5	0.76	0.84	0.86	42.9	735	88.6	91.0	91.2	0.71	0.80	0.84	40.0
30	40	730	90.0	91.3	91.3	0.73	0.81	0.85	58.7	735	89.0	91.1	91.8	0.66	0.77	0.83	54.8
37	50	735	91.0	92.2	92.1	0.70	0.79	0.82	74.4	740	90.0	92.2	92.4	0.64	0.75	0.79	70.5
45	60	735	91.0	92.2	92.0	0.70	0.77	0.82	90.6	740	90.0	92.0	92.3	0.60	0.72	0.78	87.0
55	75	735	91.6	93.2	92.8	0.72	0.80	0.83	108	740	90.7	93.0	93.0	0.65	0.76	0.80	103
75	100	735	92.4	93.3	93.3	0.70	0.80	0.83	147	740	91.6	93.4	93.4	0.64	0.78	0.81	138
90	125	735	92.9	93.9	94.0	0.73	0.81	0.84	173	740	92.1	93.7	94.2	0.67	0.75	0.81	164
110	150	740	93.0	94.2	94.5	0.66	0.77	0.82	216	745	92.0	94.1	94.5	0.60	0.71	0.78	208
132	175	740	93.5	94.6	94.8	0.66	0.75	0.81	261	745	92.5	94.4	94.8	0.60	0.71	0.77	252
160	220	740	93.8	94.8	94.8	0.68	0.77	0.81	317	745	92.8	94.7	94.7	0.60	0.72	0.79	298
200	270	740	93.8	94.8	95.1	0.65	0.75	0.81	394	745	92.8	94.4	95.2	0.56	0.69	0.77	380
HIGH-OUTPUT DESIGN																	
7.5	10	720	84.5	86.0	85.3	0.54	0.66	0.74	18.1	730	82.5	85.5	85.5	0.48	0.60	0.70	17.4
37	50	730	89.5	91.5	91.0	0.72	0.82	0.86	71.8	735	88.5	91.5	91.5	0.64	0.76	0.82	68.6
55	75	735	91.6	93.2	92.8	0.72	0.80	0.83	108	740	90.7	93.0	93.0	0.65	0.76	0.80	103
110	150	735	93.0	94.1	94.8	0.66	0.75	0.80	220	740	92.0	94.1	94.8	0.56	0.71	0.77	210

[1)]For Pad Mounted, please consider frame size 180L.
[2)]Frame size 132M/L is not available for Pad Mounted.
For Pad Mounted version frame sizes up to 250S/M.

Smoke Extraction Motors Aluminium Frame - Two Speed - 300^{0}C/1 hour Improved Efficiency EFF2 - Variable torque IV/II Pole - Dahlander Winding

Output		IEC Frame	Full load torque C_n (Nm)	Locked rotor current I_l/I_n	Locked rotor torque T_l/T_n	Break-down torque T_b/T_n	Inertia J kgm^2	Allowable locked rotor time Hot/Cold (s)	Weight (kg)	Sound dB (A)	Rated speed (rpm)	400 V						Full load current I_n (A)
												% of full load						
												Efficiency η			Power Factor (Cos φ)			
kW	HP											50	75	100	50	75	100	
50Hz - 400V - IV/II pole (1500/3000 rpm) - Y / YY connection																		
0.2	0.27	80	1.35	4.5	2.0	2.5	0.00242	30/66	14	44	1400	64.0	68.0	68.5	0.48	0.61	0.70	0.60
0.8	1.08		2.69	6.0	2.5	3.2		8/18		59	2820	70.0	72.0	73.0	0.66	0.77	0.83	1.91
0.25	0.33	80	1.67	3.8	2.2	2.5	0.00294	30/66	15	44	1390	66.0	70.0	70.5	0.48	0.60	0.68	0.75
1.1	1.5		3.75	6.0	2.5	2.8		8/18		59	2810	74.0	75.0	75.0	0.71	0.83	0.88	2.41
0.37	0.5	90S	2.45	4.5	2.0	2.1	0.00476	18/40	20	47	1435	62.3	67.4	68.8	0.45	0.54	0.62	1.25
1.5	2		4.84	6.5	2.5	3.0		6/13		68	2900	68.0	75.0	76.4	0.62	0.73	0.80	3.54
0.5	0.68	90L	3.36	3.5	1.8	2.2	0.00616	13/29	22	47	1420	67.0	70.0	71.0	0.47	0.58	0.66	1.54
2.2	3		7.41	6.0	2.2	2.6		6/13		68	2845	75.0	77.8	78.9	0.71	0.80	0.87	4.63
0.65	0.88	100L	4.31	4.5	2.1	2.2	0.00765	22/48	30	51	1435	72.0	76.5	77.5	0.56	0.67	0.73	1.66
2.5	3.4		8.26	6.5	2.3	2.8		6/13		67	2890	78.0	80.0	81.0	0.70	0.81	0.86	5.18
0.8	1.08	100L	5.30	4.6	2.1	2.2	0.00918	18/40	33	51	1430	75.0	77.0	77.5	0.57	0.68	0.75	1.99
3.1	4.2		10.2	7.2	2.3	2.8		6/13		67	2890	80.0	81.5	82.0	0.73	0.83	0.88	6.20
1.1	1.5	112M	7.32	5.0	1.8	2.6	0.01741	22/48	43	55	1440	74.0	78.5	79.0	0.55	0.66	0.72	2.79
4.4	5.9		14.3	7.8	2.4	3.0		7/15		64	2890	82.5	83.5	84.0	0.76	0.84	0.88	8.59
1.5	2	132S	9.62	5.6	2.0	2.4	0.02430	38/84	58	58	1460	77.0	81.5	83.0	0.50	0.62	0.71	3.67
6	8		19.2	8.3	2.5	3.0		6/13		68	2930	83.5	85.0	85.0	0.73	0.84	0.89	11.4
2	2.7	132M	12.9	5.8	1.9	2.0	0.02804	38/84	67	58	1470	80.0	82.0	83.0	0.51	0.63	0.72	4.83
8	10.8		25.9	8.5	2.6	2.7		6/13		68	2930	82.8	84.0	85.0	0.77	0.85	0.89	15.3
3	4	160M	19.1	6.0	2.0	2.4	0.05294	28/62	118	62	1470	80.0	83.0	84.0	0.50	0.63	0.71	7.26
12	16		38.1	8.5	2.5	2.9		6/13		70	2950	83.0	85.0	86.0	0.71	0.81	0.87	23.1
4	5.5	160L	26.3	6.0	2.2	2.4	0.06766	30/66	135	62	1470	83.5	84.5	85.0	0.50	0.63	0.71	9.57
16	21.7		51.7	8.6	2.6	3.0		6/13		70	2950	85.0	86.5	87.0	0.73	0.82	0.87	30.5
5.5	7.5	180M[1)]	36.0	4.7	1.6	2.7	0.17939	40/88	160	64	1465	84.5	87.0	87.0	0.54	0.65	0.72	12.7
20	27.2		64.7	9.2	2.7	3.5		6/13		70	2955	87.5	89.5	90.0	0.76	0.84	0.89	36.0
6.3	8.6	180L	41.2	4.7	1.6	2.4	0.21527	35/77	180	64	1465	86.5	88.0	88.5	0.54	0.65	0.72	14.3
25	34		81.0	8.9	2.7	3.4		6/13		70	2950	90.0	90.7	91.0	0.76	0.85	0.89	44.6
8.5	11.5	200L	55.0	4.2	2.0	2.0	0.34474	50/110	242	67	1470	88.5	89.5	90.0	0.58	0.69	0.74	18.4
33	44.8		106	8.2	3.2	2.8		10/22		74	2960	89.5	91.0	91.2	0.80	0.87	0.89	58.7
9	12.2	225S/M	57.71	6.1	2.3	2.6	0.39467	28/62	366	70	1485	85.0	88.0	88.5	0.55	0.65	0.72	20.4
37	50		118.25	8.7	2.6	3.0		6/13		78	2970	88.5	90.0	90.5	0.81	0.87	0.90	65.6
12	16.3	225S/M	77.88	6.3	2.2	2.4	0.76985	23/51	385	70	1470	86.0	87.0	88.2	0.57	0.67	0.73	26.9
46	63		149.5	8.8	2.4	2.8		6/13		78	2960	85.0	88.0	90.6	0.76	0.84	0.90	81.4
15	20	250S/M	94.92	5.2	1.9	2.2	1.08479	32/70	450	70	1480	88.5	89.7	90.5	0.64	0.73	0.76	31.5
55	75		177.37	8.5	2.3	2.7		6/13		78	2970	89.8	90.8	91.0	0.85	0.89	0.91	95.9

Notes:
Standard voltage, connection and frequency: 220-240V Δ 50Hz *380-415V Δ 50Hz*
380-415V Y 50Hz *660-690V Y 50Hz*
The values shown are subject to change without prior notice. To obtain guaranteed values please access our website.

Smoke Extraction Motors Aluminium Frame - Two Speed - 300°C/1 hour Improved Efficiency EFF2 - Variable torque VIII/IV Pole - Dahlander Winding

Output		IEC Frame	Full load torque C_n (Nm)	Locked rotor current I_l/I_n	Locked rotor torque T_l/T_n	Break-down torque T_b/T_n	Inertia J kgm²	Allowable locked rotor time Hot/Cold (s)	Weight (kg)	Sound dB (A)	Rated speed (rpm)	400 V						Full load current I_n (A)
												% of full load						
												Efficiency η			Power Factor (Cos φ)			
kW	HP											50	75	100	50	75	100	
50Hz - 400V - VIII/IV pole (750/1500 rpm) - Y / YY connection																		
0.15	0.2	80	1.98	3.1	2.3	2.5	0.00294	20/44	15	42	710	31.0	39.0	46.0	0.47	0.54	0.62	0.76
0.6	0.8		3.90	5.5	2.2	2.7		6/13		51	1440	57.0	65.0	68.5	0.51	0.64	0.72	1.76
0.2	0.27	80	2.75	2.7	1.7	2.0	0.00294	18/40	15	42	690	37.0	45.0	49.5	0.50	0.60	0.66	0.88
0.8	1.08		5.36	4.7	1.7	2.1		6/13		51	1415	64.0	69.0	70.0	0.59	0.73	0.83	1.99
0.3	0.4	90S	3.99	3.1	2.2	2.2	0.00560	28/62	20	43	705	46.0	54.0	57.0	0.42	0.50	0.59	1.29
1.2	1.6		7.86	5.5	2.3	2.7		6/13		53	1430	72.0	75.0	76.0	0.55	0.69	0.78	2.92
0.4	0.55	90L	5.52	3.2	2.2	2.3	0.00672	17/37	23	43	700	49.0	56.0	59.0	0.40	0.50	0.58	1.69
1.6	2.17		10.7	5.7	2.3	2.6		6/13		54	1420	73.0	76.0	77.0	0.57	0.70	0.79	3.80
0.55	0.75	100L	7.53	3.5	2.3	2.5	0.01345	20/44	30	50	700	55.0	63.0	65.0	0.40	0.52	0.61	2.00
2.2	3		14.7	6.9	2.5	2.8		6/13		55	1430	77.0	79.0	80.0	0.62	0.75	0.82	4.84
0.7	0.95	100L	9.67	3.6	2.2	2.4	0.01457	20/44	33	50	690	58.0	64.5	66.5	0.42	0.53	0.63	2.41
2.8	3.8		18.9	6.0	2.4	2.6		6/13		55	1410	77.5	80.0	80.0	0.64	0.77	0.84	6.01
1	1.4	112M	13.9	4.0	2.0	2.1	0.02617	18/40	43	46	710	70.0	73.0	74.0	0.50	0.64	0.71	2.75
3.8	5.2		25.4	7.0	2.6	2.8		6/13		57	1440	76.0	78.5	80.0	0.62	0.76	0.83	8.26
1.3	1.77	132S	17.0	6.2	2.1	2.8	0.07527	20/44	68	48	730	72.0	75.0	76.5	0.48	0.61	0.70	3.50
5	6.8		33.2	8.5	2.7	2.8		6/13		62	1440	77.0	79.0	80.0	0.71	0.82	0.87	10.4
1.8	2.45	132M/L[2)]	23.7	6.2	2.1	2.5	0.09535	21/46	80	48	725	76.0	79.0	80.0	0.50	0.63	0.70	4.64
7.2	9.8		48.1	8.5	2.7	2.7		6/13		62	1430	79.0	81.0	82.0	0.71	0.82	0.88	14.4
3	4	160M	38.8	4.3	1.7	2.1	0.14364	30/66	119	51	725	81.0	82.0	82.5	0.54	0.67	0.75	7.00
11	15		72.4	7.0	2.4	2.7		6/13		64	1455	84.0	85.5	86.0	0.71	0.83	0.88	21.0
3.5	4.8	160L	46.5	4.2	1.9	2.2	0.18673	30/66	135	51	725	81.0	83.0	83.0	0.51	0.64	0.72	8.45
14	19		91.7	7.2	2.6	2.9		6/13		64	1455	84.0	86.0	86.5	0.71	0.83	0.88	26.5
4.3	5.8	180M[1)]	55.8	4.0	1.7	2.0	0.19734	20/44	162	51	730	80.0	83.0	84.2	0.39	0.50	0.58	12.7
17	23		110	8.0	2.4	2.8		7/15		69	1475	88.6	89.5	89.5	0.62	0.75	0.82	33.4
5	6.8	180L	65.4	5.1	2.0	2.0	0.33095	20/44	177	51	730	79.0	82.7	82.7	0.40	0.54	0.62	14.1
20	27		129	8.8	2.5	2.6		7/15		69	1470	85.0	88.0	89.0	0.65	0.77	0.84	38.6
6.5	8.8	200L	84.1	3.6	1.9	2.0	0.38609	20/44	235	53	735	83.5	86.5	87.0	0.43	0.54	0.60	18.0
28	38		180	7.4	2.6	2.8		8/18		70	1480	90.5	91.5	91.5	0.71	0.81	0.85	52.0
8	10.8	200L*	104	4.0	1.8	2.0	0.41370	20/44	255	53	730	82.5	86.0	87.0	0.41	0.53	0.61	21.8
35	47		225	7.8	2.4	2.8		6/13		70	1470	89.0	90.0	90.5	0.66	0.78	0.83	67.3
9.2	12.5	225S/M	119	5.5	2.8	3.1	0.75686	18/40	360	56	740	81.0	85.0	87.0	0.43	0.53	0.60	25.4
37	50		237	9.5	3.1	4.2		6/13		70	1485	86.5	89.0	90.0	0.62	0.74	0.80	74.2
11	15	225S/M	142	5.0	2.2	2.2	1.12963	20/44	425	56	740	83.0	86.0	87.0	0.47	0.58	0.67	27.2
44	59.7		283	8.0	2.4	3.0		8/18		74	1480	89.0	90.5	91.0	0.73	0.83	0.87	80.2
14.7	19.9	250S/M	190	4.6	1.8	2.0	1.55324	18/40	450	56	735	86.0	87.5	88.0	0.45	0.58	0.66	36.5
55	75		356	9.0	2.6	3.0		6/13		74	1480	89.0	90.5	91.0	0.71	0.82	0.87	100
17	23	280S/M	218	4.2	1.5	1.6	3.33245	20/44	650	59	740	83.2	86.4	88.6	0.47	0.57	0.63	44.0
68	92.3		437	8.0	2.5	2.5		10/22		74	1485	85.1	89.0	90.0	0.76	0.83	0.86	127
20	27	280S/M	256	4.2	1.6	1.6	3.67719	20/44	690	59	740	83.9	87.3	89.0	0.46	0.57	0.61	53.2
80	109		516	8.6	2.7	2.8		10/22		78	1485	86.5	89.0	90.3	0.76	0.81	0.84	152
27	37	315S/M	351	4.0	1.7	1.7	4.82631	20/44	890	62	740	81.9	86.8	88.5	0.40	0.50	0.56	78.6
110	150		709	8.5	2.6	2.7		10/22		78	1485	88.0	90.2	91.3	0.69	0.72	0.82	212
33	44.8	315S/M	425	4.0	1.7	1.8	5.40087	20/44	990	62	740	83.5	87.8	89.4	0.40	0.51	0.58	91.9
130	177		837	8.4	2.6	2.7		10/22		78	1485	87.3	90.0	91.3	0.65	0.76	0.82	251
40	55	315S/M*	522	4.0	1.6	1.6	5.40087	20/44	1000	62		89.2	91.0	91.3	0.43	0.59	0.59	107
160	217		1026	8.0	2.3	2.5		10/22		78	1485	91.3	92.8	93.9	0.74	0.84	0.84	293

**Class "H" insulation ΔT105K*
[1)]For Pad Mounted, please consider frame size 180L.
[2)]Frame size 132M/L is not available for Pad Mounted.
For Pad Mounted version frame sizes up to 250S/M.

Smoke Extraction Motors Aluminium Frame - Two Speed - 300°C/1 hour Improved Efficiency EFF2 - Variable torque VI/IV Pole - Independent Winding

Output		IEC Frame	Full load torque C_n (Nm)	Locked rotor current I_l/I_n	Locked rotor torque T_l/T_n	Break-down torque T_b/T_n	Inertia J kgm²	Allowable locked rotor time Hot/Cold (s)	Weight (kg)	Sound dB (A)	Rated speed (rpm)	400 V						Full load current I_n (A)
												% of full load						
												Efficiency η			Power Factor (Cos φ)			
kW	HP											50	75	100	50	75	100	
50Hz - 400V - VI/IV pole (1000/1500 rpm) - Y / Y connection																		
0.2	0.27	80	1.96	3.7	1.9	2.7	0.00328	9/20	11	48	970	31.0	40.0	46.0	0.44	0.52	0.60	1.05
0.55	0.75		3.63	5.0	1.9	2.7		6/13		54	1450	52.0	60.0	65.7	0.48	0.61	0.69	1.75
0.25	0.33	80	2.39	3.9	2.5	3.4	0.00346	7/15	12	48	970	33.0	41.5	48.0	0.42	0.50	0.57	1.32
0.75	1		4.91	4.7	1.4	2.1		6/13		54	1430	62.0	67.0	68.0	0.59	0.72	0.82	1.94
0.3	0.4	90S	2.90	5.1	2.6	3.2	0.00560	9/20	16	45	970	38.0	48.0	53.0	0.39	0.46	0.54	1.51
1.1	1.5		7.32	5.4	2.0	2.6		6/13		57	1440	65.0	71.0	72.5	0.51	0.65	0.75	2.92
0.37	0.5	90L	3.62	4.5	2.1	2.6	0.00672	8/18	20	45	970	40.0	50.0	55.0	0.43	0.50	0.60	1.62
1.5	2		9.76	5.5	1.9	2.4		6/13		57	1440	70.0	74.0	75.0	0.55	0.69	0.79	3.65
0.6	0.82	100L	5.94	5.0	2.2	3.1	0.01345	9/20	25	44	970	51.0	59.0	63.0	0.41	0.50	0.59	2.33
1.7	2.3		11.1	6.5	2.1	2.7		6/13		59	1450	68.0	73.0	75.0	0.52	0.65	0.74	4.42
0.7	0.95	100L	6.88	5.5	2.8	3.5	0.01000	10/22	27	44	970	57.0	64.0	68.0	0.40	0.50	0.60	2.48
2.2	3		14.7	6.0	1.7	2.2		6/13		59	1430	76.0	77.0	77.0	0.64	0.77	0.84	4.91
1	1.36	112M	9.70	6.2	3.0	3.5	0.02617	7/15	36	48	985	54.0	63.0	68.0	0.37	0.46	0.55	3.86
3	4		19.2	7.6	2.6	3.0		6/13		61	1460	76.0	80.0	81.0	0.58	0.70	0.78	6.85
1.5	2	132S	14.2	7.0	3.0	3.8	0.05071	8/18	68	52	990	64.0	71.0	76.0	0.35	0.45	0.53	5.38
4.5	6		28.8	7.5	2.8	3.1		8/18		65	1465	76.0	80.0	82.0	0.58	0.70	0.78	10.2
2.2	3	132M	21.3	7.4	2.8	3.2	0.06242	7/15	79	52	990	72.0	78.0	80.0	0.37	0.48	0.57	6.96
6	8.1		38.8	7.8	2.5	3.1		6/13		65	1465	75.0	80.0	82.0	0.57	0.70	0.78	13.7
2.5	3.4	160M	24.4	7.0	2.5	3.6	0.11491	12/26	96	56	980	74.5	79.0	81.0	0.49	0.64	0.74	6.02
5.5	7.5		35.7	7.5	2.0	3.3		6/13		68	1475	75.5	80.0	81.5	0.60	0.74	0.83	11.7
3.3	4.5	160M	32.4	4.0	2.0	2.3	0.10610	18/40	120	56	975	75.5	78.5	79.0	0.48	0.61	0.69	8.74
10	13.6		64.8	7.0	3.0	3.2		7/15		68	1475	83.0	86.0	87.0	0.56	0.69	0.76	22.0
3.5	4.8	160M	34.4	6.6	2.3	3.2	0.14364	9/20	118	56	980	77.0	81.0	82.0	0.53	0.68	0.78	7.90
7.5	10		47.6	8.0	2.2	3.5		6/13		68	1475	78.0	82.0	83.5	0.60	0.75	0.83	15.6
4.5	6	160L	43.2	4.5	1.9	2.0	0.13131	8/18	135	56	975	77.0	79.0	79.0	0.56	0.68	0.75	11.0
14	19		90.8	7.0	3.0	3.0		8/18		68	1470	84.5	87.0	88.0	0.66	0.77	0.82	28.0
5	6.8	180M[1)]	48.5	8.0	2.2	2.7	0.27579	6/13	163	56	985	85.0	86.0	86.0	0.73	0.83	0.87	9.65
11	15		71.7	10.0	2.6	3.3		5/11		71	1470	86.5	88.0	88.5	0.85	0.90	0.92	19.5
6.5	8.8	180M[1)]	63.1	7.6	2.1	2.9	0.33308	5/11	195	56	980	85.5	86.0	86.3	0.73	0.83	0.87	12.5
16	21.7		104.0	8.5	2.4	2.9		5/11		71	1465	88.0	88.5	88.5	0.89	0.91	0.92	28.4
8.5	11.5	180L	82.0	8.7	2.5	3.5	0.37922	5/11	230	56	985	86.5	87.5	87.5	0.68	0.80	0.86	16.3
20	27.2		130.4	9.0	2.4	3.3		5/11		71	1465	88.5	89.0	89.0	0.86	0.91	0.93	34.9
9	12.2	200L	86.6	8.1	3.0	3.2	0.50550	7/15	280	58	990	84.5	87.5	88.5	0.58	0.70	0.79	18.6
26	35.5		168.5	7.5	2.5	3.1		13/29		74	1480	88.5	90.5	90.5	0.74	0.83	0.87	47.7
12	16	225S/M	113.5	8.3	3.5	3.5	0.77479	9/20	379	61	990	82.0	85.5	87.0	0.50	0.62	0.71	28.0
34	46.2		218.5	8.5	2.5	3.2		6/13		76	1485	87.0	89.0	89.0	0.72	0.82	0.87	63.4
14	19	225S/M	134.8	8.0	3.2	3.3	0.84523	5/11	433	61	990	81.5	85.5	87.0	0.48	0.61	0.71	32.7
40	55		260.2	9.0	2.9	3.5		5/11		76	1485	88.5	90.5	91.0	0.71	0.81	0.87	72.9
18	24.4	250S/M	173.1	8.1	3.3	3.6	1.16219	9/20	520	61	990	86.0	88.0	89.0	0.51	0.65	0.73	40.0
50	68		321.6	8.6	2.6	3.4		5/11		76	1485	90.0	91.5	92.0	0.73	0.83	0.87	90.2
25	34	280S/M	241.2	8.0	3.6	3.2	2.58594	11/24	685	66	990	84.0	87.5	89.0	0.50	0.61	0.69	58.8
70	95		449.3	7.5	2.3	2.8		20/44		81	1485	90.5	92.0	93.0	0.78	0.85	0.87	125
28	38	280S/M	269.6	7.1	3.1	2.7	2.82838	24/53	748	66	990	86.0	89.0	90.5	0.55	0.66	0.73	61.2
80	109		513.8	9.0	2.7	3.4		12/26		81	1490	89.0	91.5	92.6	0.71	0.80	0.85	147
34	46	315S/M	324.7	8.8	3.7	3.4	3.39405	8/18	898	69	995	85.0	88.0	90.0	0.49	0.61	0.69	79.0
95	129		610.2	8.1	2.9	2.9		15/33		81	1485	91.0	92.7	93.5	0.79	0.85	0.88	167
40	54.3	315S/M	385.3	7.0	3.3	3.3	3.79810	15/33	1005	69	990	88.5	90.5	91.5	0.50	0.62	0.70	90.1
115	156		735.4	9.0	3.0	3.8		11/24		81	1490	91.4	93.2	93.9	0.62	0.73	0.80	221
45	60	315S/M	425.7	6.5	2.7	2.5	3.79810	8/18	1005	69	990	90.0	91.0	91.5	0.60	0.71	0.77	92.2
125	170		801.4	9.0	2.9	3.5		13/29		81	1490	93.0	94.0	94.5	0.70	0.80	0.83	230
55	75	315S/M	532.1	7.2	3.2	2.9	3.79810	5/11	1005	69	990	90	91	91.6	0.56	0.68	0.75	116
145	197		931.8	8.0	2.5	3.0		9/20		81	1485	93.5	94.5	94.5	0.73	0.83	0.84	264

Notes:
Standard voltage, connection and frequency: 220-240V Δ 50Hz *380-415V Δ 50Hz*
380-415V Y 50Hz *660-690V Y 50Hz*
The values shown are subject to change without prior notice. To obtain guaranteed values please access our website.

Smoke Extraction Motors Aluminium Frame - Two Speed - 300°C/1 hour Improved Efficiency EFF2 - Constant torque IV/II Pole - Dahlander Winding

Output		IEC Frame	Full load torque C_n (Nm)	Locked rotor current I_l/I_n	Locked rotor torque T_l/T_n	Break-down torque T_b/T_n	Inertia J kgm²	Allowable locked rotor time Hot/Cold (s)	Weight (kg)	Sound dB (A)	Rated speed (rpm)	400 V						Full load current I_n (A)
												% of full load						
												Efficiency η			Power Factor (Cos φ)			
kW	HP											50	75	100	50	75	100	
50Hz - 400V - IV/II pole (1500/3000 rpm) - Δ / YY connection																		
0.48	0.65	80	3.31	4.0	2.3	2.3	0.00079	20/44	14	44	1380	61.0	67.0	68.1	0.50	0.62	0.72	1.41
0.6	0.82		2.04	6.1	2.5	2.8		12/26		59	2830	69.0	72.0	73.0	0.72	0.82	0.87	1.36
0.7	0.95	80	4.91	4.0	2.2	2.2	0.00096	18/40	15	44	1360	65.0	68.0	68.4	0.50	0.62	0.71	2.08
0.85	1.15		2.86	6.2	2.5	2.8		10/22		59	2820	72.0	75.5	76.5	0.73	0.82	0.88	1.82
1.1	1.5	90S	7.53	5.0	2.1	2.2	0.00504	7/15	20	47	1400	71.0	73.5	74.0	0.66	0.78	0.84	2.55
1.4	1.9		4.85	6.0	2.2	2.2		6/13		68	2750	68.0	72.0	73.0	0.70	0.81	0.90	3.08
1.5	2	90L	9.96	5.2	2.3	2.4	0.00616	8/18	22	47	1410	73.0	75.3	76.0	0.61	0.76	0.83	3.43
1.9	2.6		6.50	5.5	2.3	2.5		6/13		68	2810	68.0	72.0	72.5	0.74	0.84	0.90	4.20
2	2.7	100L	13.5	6.0	2.4	2.4	0.00918	12/26	34	51	1410	72.4	75.5	76.2	0.62	0.74	0.83	4.56
2.4	3.3		8.08	6.7	2.4	2.5		8/18		67	2870	72.0	74.0	76.0	0.75	0.85	0.89	5.12
2.6	3.5	100L	17.4	5.5	2.4	2.5	0.00918	8/18	34	51	1410	74.0	77.3	78.0	0.62	0.74	0.83	5.8
3.1	4.2		10.3	6.8	2.5	2.8		6/13		67	2870	74.0	77.0	77.5	0.67	0.80	0.87	6.64
3.7	5	112M	24.6	6.0	2.3	2.3	0.01607	8/18	45	55	1430	79.5	80.0	80.0	0.68	0.80	0.86	7.76
4.4	5.9		14.4	7.3	2.4	2.7		6/13		64	2885	79.0	80.0	80.5	0.77	0.86	0.91	8.67
4.9	6.6	132S	32.0	6.5	1.7	2.0	0.04264	6/18	62	58	1450	82.0	83.0	83.0	0.78	0.86	0.89	9.57
5.9	7.9		19.2	6.5	2.0	2.3		6/13		68	2890	77.5	78.5	79.0	0.82	0.89	0.92	11.7
6.8	9.2	132M	44.6	6.4	1.6	2.0	0.05427	7/15	68	58	1450	83.0	84.0	84.0	0.75	0.84	0.88	13.3
8	10.9		26.3	6.5	2.0	2.3		6/13		68	2910	79.0	81.0	82.0	0.75	0.87	0.91	15.5
9.5	12.9	160M	62.5	5.0	2.0	2.1	0.09535	20/44	110	62	1450	83.5	84.2	85.0	0.77	0.84	0.86	18.8
11	15		35.8	8.0	2.8	2.8		10/22		70	2940	80.0	82.1	83.0	0.78	0.86	0.87	22.0
12	16.3	160L*	79.0	5.0	1.9	2.0	0.11542	20/44	126	62	1450	83.9	85.5	86.0	0.78	0.85	0.87	23.1
15	20		48.3	7.0	2.1	2.6		8/18		70	2910	82.5	85.0	85.4	0.85	0.90	0.92	27.6
15	20	180M[1)]	96.2	6.3	2.2	2.3	0.19733	17/37	170	64	1460	86.5	87.7	88.0	0.72	0.81	0.86	28.6
18	24.5		58.3	7.5	2.3	2.8		10/22		70	2950	86.5	87.5	88.0	0.84	0.89	0.92	32.1
18	24.5	180L	117	6.7	2.2	2.4	0.22424	15/33	190	64	1465	87.5	88.7	89.0	0.71	0.81	0.85	34.3
21.5	29.2		69.5	8.5	2.5	2.9		9/20		70	2950	86.5	88.0	88.7	0.79	0.87	0.90	38.9
26	35	200L	167	6.2	2.0	2.2	0.35853	22/48	250	67	1475	89.0	90.0	90.5	0.69	0.79	0.84	49.4
33	45		107	8.0	2.2	2.5		8/18		74	2950	85.5	88.0	88.8	0.83	0.89	0.91	58.9
32	43.5	225S/M	206	8.1	2.6	3.3	0.69987	11/24	350	70	1480	89.0	90.1	90.6	0.76	0.83	0.88	57.9
38	52		123	8.7	2.6	3.3		8/18		78	2960	84.6	87.3	88.5	0.83	0.87	0.89	69.6
38	52	225S/M	247	7.8	2.3	2.6	0.76985	12/26	380	70	1480	89.0	90.4	91.0	0.75	0.83	0.88	68.5
45	60		142	8.3	2.5	2.8		7/15		78	2960	85.0	87.9	89.0	0.77	0.84	0.87	83.9
46	63	250S/M	301	8.0	2.3	2.6	0.97981	7/15	440	70	1470	89.2	90.8	91.4	0.76	0.83	0.88	82.5
55	75		179	8.6	2.2	2.8		6/13		78	2940	85.5	88.4	89.5	0.82	0.87	0.90	98.6

**Class "H" insulation ΔT105K*
[1)]For Pad Mounted, please consider frame size 180L.
[2)]Frame size 132M/L is not available for Pad Mounted.
For Pad Mounted version frame sizes up to 250S/M.

Smoke Extraction Motors Aluminium Frame - Two Speed - 300^{0}C/1 hour Improved Efficiency EFF2 - Constant torque VIII/IV Pole - Dahlander Winding

Output		IEC Frame	Full load torque C_n (Nm)	Locked rotor current I_l/I_n	Locked rotor torque T_l/T_n	Break-down torque T_b/T_n	Inertia J kgm^2	Allowable locked rotor time Hot/Cold (s)	Weight (kg)	Sound dB (A)	Rated speed (rpm)	400 V						Full load current I_n (A)
												% of full load						
												Efficiency η			Power Factor (Cos φ)			
kW	HP											50	75	100	50	75	100	
50Hz - 400V - VIII/IV pole (750/1500 rpm) - Δ / YY connection																		
0.27	0.37	80	3.79	2.5	1.8	1.8	0.00294	10/22	15	42	685	35.0	41.0	48.0	0.46	0.55	0.64	1.27
0.4	0.55		2.72	4.2	1.6	1.8		9/20		51	1420	65.0	68.0	69.1	0.60	0.71	0.81	1.03
0.4	0.54	90S	5.42	3.2	2.0	2.0	0.00504	13/29	19	43	700	40.0	50.0	53.0	0.42	0.52	0.60	1.82
0.7	0.95		4.77	5.0	1.8	2.0		8/18		53	1400	71.5	73.0	73.0	0.68	0.80	0.86	1.61
0.52	0.71	90L	7.12	3.3	2.0	2.0	0.00672	8/18	29	43	700	45.0	53.0	57.0	0.42	0.53	0.63	2.09
0.9	1.22		6.16	5.2	1.8	2.0		7/15		54	1390	73.5	75.0	75.0	0.70	0.81	0.86	2.01
0.7	0.95	100L	9.40	4.2	1.9	2.2	0.01121	13/29	31	50	710	60.0	66.0	68.0	0.42	0.53	0.64	2.32
1.1	1.5		7.32	5.8	2.0	2.4		6/13		55	1440	71.0	75.0	75.0	0.61	0.74	0.82	2.58
1.1	1.5	100L	15.1	4.2	1.9	2.3	0.01289	12/26	45	50	700	62.0	67.0	68.5	0.44	0.56	0.66	3.51
1.8	2.45		12.0	5.5	2.1	2.4		6/13		55	1430	70.0	75.0	75.0	0.64	0.75	0.82	4.22
1.5	2	112M	19.5	5.0	2.5	2.5	0.02617	8/18	68	46	720	66.0	71.0	75.0	0.43	0.53	0.64	4.51
2.5	3.4		16.6	7.0	2.5	2.7		6/13		57	1440	78.0	80.0	80.5	0.72	0.82	0.88	5.09
1.9	2.58	132S	25.2	6.3	2.6	2.6	0.07527	7/15	80	48	720	70.0	74.5	76.0	0.44	0.57	0.67	5.39
3.7	5		24.6	7.0	2.4	2.4		6/13		62	1430	79.2	80.1	82.0	0.78	0.87	0.90	7.24
3.3	4.5	132M/L[2)]	43.9	6.3	2.6	2.8	0.09535	10/22	119	48	720	74.0	77.0	78.0	0.47	0.60	0.70	8.72
5.5	7.5		36.8	7.5	2.7	2.7		6/13		62	1430	79.6	80.6	82.5	0.78	0.87	0.90	10.7
3.7	5	160M	48.1	5.4	2.3	2.8	0.12927	10/22	119	51	730	72.5	77.5	79.5	0.43	0.55	0.65	10.3
7	9.5		46.0	6.5	2.2	2.6		6/13		64	1450	83.5	84.2	84.5	0.79	0.87	0.90	13.3
5.5	7.5	160M	73.2	5.0	2.1	2.4	0.14364	15/33	127	51	720	74.0	77.5	79.6	0.48	0.60	0.70	14.2
8.8	12		58.1	6.5	2.1	2.4		7/15		64	1450	83.2	84.3	84.5	0.79	0.86	0.88	17.1
7	9.5	160L	92.0	5.0	2.3	2.4	0.16518	12/26	177	51	725	75.0	79.5	80.5	0.46	0.58	0.68	18.5
11	15		72.4	6.5	2.2	2.6		6/13		64	1455	84.0	85.0	85.0	0.77	0.86	0.89	21.0
11	15	180L	144	7.3	2.3	2.5	0.30337	6/13	255	51	730	82.0	82.6	84.0	0.50	0.63	0.70	27.0
18	24.5		118	8.5	2.2	2.4		6/13		69	1460	85.8	86.3	87.0	0.81	0.88	0.90	33.2
17	23	200L	220	4.5	2.0	2.2	0.50227	26/57	360	53	735	84.5	86.5	87.2	0.54	0.67	0.74	38.0
27	37		177	6.0	2.0	2.4		10/22		67	1465	88.0	89.0	89.5	0.85	0.89	0.91	47.8
22	30	225S/M	289	7.5	2.0	2.3	1.22377	9/20	425	56	730	86.5	87.5	88.0	0.65	0.76	0.82	44.0
32	43.5		209	8.5	2.0	2.5		6/13		70	1465	87.5	88.5	89.0	0.89	0.93	0.94	55.2
26	35	225S/M	339	7.5	2.0	2.3	1.36497	7/15	450	56	725	86.2	87.3	88.0	0.67	0.78	0.82	52.0
37	50		242	8.8	2.0	2.3		6/13		70	1450	87.2	88.1	88.7	0.85	0.89	0.91	66.2
33	45	250S/M	433	7.2	1.9	2.2	1.55324	6/13	650	56	730	87.0	88.3	89.0	0.67	0.78	0.82	65.3
47	64		308	9.0	2.2	2.4		6/13		70	1460	87.5	88.4	90.0	0.86	0.90	0.92	81.9
38	52	280S/M	494	5.0	1.8	2.2	3.33245	25/55	690	59	740	87.8	89.5	90.5	0.53	0.63	0.69	87.8
56	76		359	7.0	1.8	2.2		12/26		77	1485	89.5	90.5	91.0	0.83	0.86	0.88	101
46	63	280S/M	602	4.5	1.7	2.0	2.56920	30/66	890	59	735	89.0	90.0	90.2	0.53	0.63	0.70	105
67	91		430	7.0	2.0	2.2		15/33		77	1485	90.5	91.4	91.8	0.84	0.88	0.89	118
56	76	315S/M	726	4.5	1.8	2.0	3.21158	30/66	990	62	735	89.5	90.5	91.0	0.53	0.64	0.70	127
83	113		536	7.0	2.0	2.2		15/33		77	1480	90.5	91.5	92.0	0.84	0.88	0.90	145
78	106	315S/M	1006	7.0	1.8	2.2	5.28596	10/22		62	740	88.6	90.6	91.1	0.65	0.76	0.80	154
115	156		738	8.4	2.0	2.3		6/13		77	1485	88.0	90.0	91.2	0.88	0.90	0.92	198

Notes:
Standard voltage, connection and frequency: 220-240V Δ 50Hz *380-415V Δ 50Hz*
380-415V Y 50Hz *660-690V Y 50Hz*
The values shown are subject to change without prior notice. To obtain guaranteed values please access our website.

Smoke Extraction Motors Aluminium Frame - Two Speed - 300°C/1 hour
Improved Efficiency EFF2 - Constant torque VI/IV Pole - Independent Winding

Output		IEC Frame	Full load torque C_n (Nm)	Locked rotor current I_l/I_n	Locked rotor torque T_l/T_n	Break-down torque T_b/T_n	Inertia J kgm²	Allowable locked rotor time Hot/Cold (s)	Weight (kg)	Sound dB (A)	Rated speed (rpm)	400 V						Full load current I_n (A)
												% of full load						
												Efficiency η			Power Factor (Cos φ)			
kW	HP											50	75	100	50	75	100	
50Hz - 400V - VI/IV pole (1000/1500 rpm) - Y / Y connection																		
0.22	0.3	80	2.19	4.0	2.3	2.8	0.00346	11/24	12	48	960	37.0	46.0	52.0	0.41	0.50	0.56	1.09
0.32	0.43		2.07	5.2	2.1	2.6		6/13		54	1460	48.0	55.0	61.0	0.40	0.51	0.59	1.28
0.26	0.36	80	2.63	3.5	2.1	2.7	0.00346	12/26	12	48	960	37.0	46.0	52.0	0.43	0.52	0.60	1.20
0.4	0.54		2.60	5.0	1.8	2.9		8/18		54	1460	50.0	58.0	62.0	0.49	0.60	0.69	1.35
0.38	0.52	90S	3.77	6.2	2.4	3.3	0.00560	6/13	16	45	970	48.0	58.0	63.7	0.40	0.50	0.59	1.46
0.65	0.88		4.23	6.4	2.0	2.9		5/11		57	1460	61.5	68.0	72.3	0.52	0.64	0.74	1.75
0.55	0.75	90L	5.49	4.0	2.2	2.9	0.00672	12/26	20	45	960	52.0	60.0	65.0	0.41	0.52	0.61	2.00
0.9	1.22		5.95	5.6	2.0	2.8		5/11		57	1440	67.0	72.0	73.0	0.54	0.67	0.77	2.31
0.9	1.22	100L	9.07	4.7	2.2	2.4	0.01121	9/20	21	44	945	59.0	65.0	67.7	0.51	0.62	0.71	2.70
1.3	1.77		8.63	5.8	1.8	2.4		8/18		59	1440	69.5	72.0	72.4	0.61	0.72	0.81	3.20
1.1	1.5	100L	11.2	4.5	2.1	2.3	0.00925	9/20	25	44	940	65.0	69.0	69.2	0.48	0.61	0.74	3.10
1.7	2.3		11.2	6.0	2.0	2.7		5/11		59	1440	73.5	76.5	76.7	0.56	0.70	0.80	4.00
1.5	2	112M	14.5	5.8	2.6	3.0	0.01889	10/22	36	48	970	70.0	74.0	77.0	0.51	0.62	0.69	4.08
2.3	3.1		14.9	6.6	1.8	2.6		5/11		61	1460	73.0	76.0	78.0	0.63	0.75	0.81	5.25
2	2.7	132S	19.3	6.2	2.8	3.2	0.05072	9/20	68	52	985	63.0	70.0	73.0	0.45	0.57	0.66	5.99
3.1	4.2		20.2	7.8	2.2	2.9		12/26		65	1460	82.0	84.0	84.2	0.64	0.75	0.83	6.40
2.8	3.8	132M	27.1	7.9	2.5	2.9	0.06242	9/20	79	52	985	77.0	81.0	82.0	0.48	0.60	0.69	7.14
4.3	5.8		27.8	7.2	2.2	2.5		8/18		65	1465	80.0	81.0	82.0	0.70	0.80	0.85	8.90
4.3	5.8	160M	41.8	5.5	2.0	2.6	0.11565	8/18	96	56	975	79.0	80.0	81.0	0.59	0.74	0.82	9.34
6.6	8.97		42.7	6.9	2.0	3.0		5/11		68	1475	76.0	80.0	82.0	0.60	0.75	0.84	13.8
5.7	7.7	160L	55.5	5.7	2.0	2.6	0.14456	7/15	127	56	975	80.5	81.5	82.6	0.60	0.75	0.83	12.0
8.7	11.8		56.4	6.0	1.9	3.0		6/13		68	1470	79.2	82.5	83.4	0.67	0.80	0.87	17.3
9.5	12.9	180M[1)]	92.5	8.4	2.5	2.9	0.30532	5/11	179	56	980	86.0	86.5	87.0	0.78	0.86	0.87	18.1
14	19		90.8	8.6	2.1	3.0		5/11		71	1470	86.5	87.0	87.2	0.88	0.91	0.92	25.2
11	15	180L	108	6.5	2.0	2.2	0.33308	5/11	200	56	975	84.0	85.0	85.5	0.80	0.86	0.88	21.1
16.5	22.4		107	9.6	2.4	2.9		5/11		71	1470	86.5	87.5	88.0	0.85	0.90	0.93	29.1
16	21.7	200L	155	7.0	2.7	2.8	0.46939	8/18	280	58	985	88.0	89.5	90.0	0.64	0.75	0.81	31.7
24	32.6		155	7.0	2.3	2.6		10/22		74	1475	88.5	90.0	90.0	0.80	0.87	0.89	43.2
21	28.5	225S/M	202	7.0	2.8	3.0	0.77479	7/15	379	61	990	84.0	87.0	88.3	0.55	0.68	0.78	44.0
31	42		198	7.7	2.5	3.3		7/15		76	1490	85.0	87.5	88.5	0.70	0.80	0.86	58.8
25	34	225S/M	241	7.0	2.9	3.2	0.91566	7/15	469	61	990	85.0	87.0	88.0	0.52	0.66	0.74	55.4
37	50		237	8.1	2.4	3.2		7/15		76	1480	90.5	91.0	91.5	0.76	0.85	0.88	66.3
32	43.5	250S/M	309	6.8	2.7	3.4	1.16219	6/13	520	61	990	86.3	88.0	89.0	0.57	0.69	0.77	67.4
47	64		303	8.6	2.6	3.4		7/15		76	1485	90.0	91.5	92.0	0.76	0.85	0.88	83.8
45	60	280S/M	424	7.1	2.9	2.4	2.58594	11/24	685	66	995	87.0	89.0	90.0	0.60	0.70	0.75	96.2
66	90		426	8.5	2.5	3.0		11/24		81	1485	89.0	91.0	92.0	0.72	0.82	0.86	120
54	73	280S/M	518	7.1	3.0	2.5	3.07081	14/31	810	66	990	87.5	90.0	91.0	0.60	0.70	0.75	114
80	109		516	8.4	2.6	3.1		10/22		81	1485	89.5	91.5	92.5	0.75	0.83	0.86	145
62	84	315S/M	596	7.7	3.0	3.3	3.39405	11/24	898	69	990	85.0	88.5	90.0	0.56	0.67	0.72	138
92	126		596	8.5	2.8	2.9		9/20		81	1485	88.0	90.5	91.5	0.80	0.86	0.87	169
75	100	315S/M*	709	7.0	2.9	2.8	3.79811	5/11	1005	69	990	86.0	89.0	90.0	0.60	0.69	0.75	160
110	150		712	6.6	2.2	2.4		5/11		81	1480	89.0	91.0	92.0	0.81	0.86	0.88	196

**Class "H" insulation ΔT105K*
[1)]For Pad Mounted, please consider frame size 180L.
[2)]Frame size 132M/L is not available for Pad Mounted.
For Pad Mounted version frame sizes up to 250S/M.

Smoke Extraction Motors Aluminium Frame - Single Speed - 400^{0}C/2 hours Improved Efficiency EFF2

Output		IEC Frame	Full load torque C_n (Nm)	Locked rotor current I_l/I_n	Locked rotor torque T_l/T_n	Break-down torque T_b/T_n	Inertia J kgm^2	Allowable locked rotor time Hot/Cold (s)	Weight (kg)	Sound dB (A)	Rated speed (rpm)	400 V						Full load current I_n (A)
												% of full load						
												Efficiency η			Power Factor (Cos φ)			
kW	HP											50	75	100	50	75	100	
II Pole - 3000 rpm																		
0.75	1	80	2.52	5.8	2.9	3.1	0.00079	25/55	14	59	2790	76.0	80.0	79.5	0.76	0.84	0.87	1.57
1.1	1.5	80	3.75	6.0	3.0	2.9	0.00090	13/29	15	59	2810	77.1	80.2	79.7	0.69	0.80	0.86	2.32
1.5	2	90S	4.89	6.8	2.8	3.0	0.00205	14/31	19	68	2870	81.4	83.7	83.6	0.71	0.81	0.86	3.01
2.2	3	90L	7.42	6.6	2.8	3.0	0.00242	9/20	21	68	2840	82.2	83.7	83.4	0.69	0.80	0.85	4.48
4	5.5	112M	13.4	7.6	2.7	3.1	0.00842	15/33	44	64	2890	85.0	87.5	87.5	0.76	0.84	0.88	7.50
5.5	7.5	132S	18.0	8.0	2.7	3.2	0.02056	18/40	60	68	2935	84.0	87.1	88.3	0.73	0.82	0.87	10.3
7.5	10	132S	24.0	7.3	2.5	2.9	0.02430	10/22	64	68	2925	86.5	88.9	89.2	0.77	0.86	0.89	13.6
11	15	132M	36.0	7.0	2.4	3.2	0.03178	13/29	78	68	2925	90.0	90.6	90.2	0.76	0.84	0.88	20.0
15	20	160M	47.7	7.8	2.5	3.2	0.05295	10/22	114	70	2945	89.6	91.1	91.2	0.76	0.84	0.88	27.0
18.5	25	160L	59.6	8.2	2.6	3.3	0.06471	10/22	128	70	2945	90.4	91.9	91.7	0.77	0.85	0.88	33.1
22	30	180L	71.4	8.2	2.8	3.1	0.11351	13/29	175	70	2950	90.5	92.1	92.1	0.78	0.78	0.89	38.7
30	40	200L	94.8	7.5	2.8	2.8	0.20630	19/42	239	74	2965	90.0	92.0	92.7	0.77	0.85	0.88	53.1
37	50	200L	118	7.6	2.9	2.9	0.22424	19/42	253	74	2965	91.3	92.8	93.0	0.75	0.84	0.88	65.3
45	60	225S/M	142	7.9	2.6	3.5	0.44846	24/53	414	78	2965	91.6	93.3	93.6	0.85	0.89	0.91	76.3
55	75	250S/M	178	8.5	2.8	3.0	0.50227	15/33	454	78	2960	91.8	93.5	93.8	0.85	0.89	0.91	93.0
IV Pole - 1500 rpm																		
0.55	0.75	80	3.71	6.0	2.3	2.5	0.00242	17/37	14	44	1430	69.0	73.0	75.0	0.56	0.69	0.78	1.36
0.75	1	90S	4.91	7.5	2.6	2.6	0.00504	8/18	21	47	1435	73.0	76.0	77.0	0.57	0.67	0.76	1.85
1.1	1.5	90S	7.47	7.2	2.6	2.4	0.00560	8/18	22	47	1420	77.5	78.6	79.5	0.64	0.75	0.82	2.44
1.5	2	90L	9.96	7.6	2.6	2.5	0.00672	7/15	24	47	1420	78.0	79.0	80.2	0.63	0.76	0.82	3.29
2.2	3	100L	15.1	7.1	2.2	2.4	0.00918	8/18	32	51	1410	81.8	82.5	81.5	0.67	0.78	0.84	4.64
3	4	100L	20.1	7.5	2.6	2.5	0.00995	7/15	34	51	1410	81.9	82.6	82.6	0.62	0.75	0.81	6.47
4	5.5	112M	27.2	7.5	2.5	2.6	0.01875	12/26	47	55	1430	86.0	87.4	87.1	0.70	0.81	0.87	7.62
5.5	7.5	132S	36.1	8.0	2.2	2.7	0.04652	11/24	63	58	1465	85.4	87.7	88.5	0.68	0.79	0.85	10.6
7.5	10	132M	48.0	8.0	2.3	2.6	0.05427	8/18	70	58	1470	86.4	88.4	88.6	0.70	0.80	0.86	14.2
11	15	160M	72.4	6.0	2.0	2.3	0.09535	16/35	115	62	1460	87.6	89.4	89.9	0.68	0.77	0.82	21.5
15	20	160L	96.9	6.0	2.0	2.2	0.11542	13/29	122	62	1455	89.0	90.4	90.0	0.68	0.79	0.83	29.0
18.5	25	180M[1)]	120	7.3	2.3	2.6	0.17939	18/40	180	64	1470	89.8	91.5	91.5	0.68	0.79	0.84	34.7
22	30	180L	144	7.5	2.5	2.5	0.19733	14/31	185	64	1470	90.0	91.2	91.7	0.67	0.78	0.83	41.7
30	40	200L	191	6.5	2.0	2.2	0.33095	17/37	248	67	1475	91.8	93.0	93.0	0.75	0.82	0.85	54.8
37	50	225S/M	238	7.2	2.1	2.4	0.62988	20/44	356	70	1480	91.2	92.2	92.8	0.76	0.85	0.88	65.4
45	60	225S/M	286	7.0	2.1	2.5	0.76985	16/35	377	70	1475	91.0	92.9	93.5	0.76	0.85	0.88	78.9
55	75	250S/M	357	7.5	2.1	2.4	0.97981	16/35	446	70	1475	92.7	93.1	93.4	0.80	0.87	0.90	94.4
75	100	280S/M	475	6.7	1.9	2.2	2.32858	44/97	719	74	1485	92.4	93.8	94.3	0.83	0.88	0.90	128
90	125	280S/M	593	7.1	2.2	2.3	2.56947	31/68	754	74	1485	92.3	93.9	94.2	0.82	0.87	0.89	155
110	150	315S/M	709	7.1	2.3	2.6	2.81036	27/59	857	77	1485	92.8	94.4	94.4	0.78	0.85	0.88	191
132	175	315S/M	828	7.3	2.5	2.6	3.77391	31/68	1007	77	1485	93.3	94.7	95.1	0.78	0.85	0.88	228
160	220	315S/M	1044	7.0	2.4	2.7	3.77391	22/48	994	77	1480	93.3	95.1	95.5	0.78	0.85	0.87	278
200	270	355M/L	1273	6.6	2.3	2.2	7.45663	44/97	1525	79	1490	94.0	95.0	95.2	0.82	0.86	0.88	345
250	340	355M/L	1603	6.9	2.2	2.5	8.38871	36/79	1651	79	1490	94.3	95.2	95.8	0.80	0.86	0.88	428
315	430	355M/L	2027	6.7	2.2	2.4	10.2529	42/92	1835	79	1490	94.8	95.9	96.2	0.79	0.86	0.89	531
330	450	355M/L	2121	6.5	2.3	2.3	11.1850	32/70	1865	79	1490	95.0	96.0	96.2	0.83	0.88	0.90	550
HIGH-OUTPUT DESIGN																		
0.75	1	80	5.02	5.5	2.2	2.3	0.00294	14/31	15	44	1415	73.5	76.2	76.2	0.62	0.74	0.83	1.71

Notes:
**Class "F" insulation with ΔT105K*
Standard voltage, connection and frequency: 220-240V Δ 50Hz; 380-415V Δ 50Hz; 380-415V Y 50Hz; 660-690V Y 50Hz
The values shown are subject to change without prior notice. To obtain guaranteed values please access our website.

Smoke Extraction Motors Aluminium Frame - Single Speed - 400^{0}C/2 hours Improved Efficiency EFF2

Output		380 V								415 V							
		Rated speed (rpm)	% of full load						Full load current I_n (A)	Rated speed (rpm)	% of full load						Full load current I_n (A)
			Efficiency η			Power Factor (Cos φ)					Efficiency η			Power Factor (Cos φ)			
kW	HP		50	75	100	50	75	100			50	75	100	50	75	100	
II Pole - 3000 rpm																	
0.75	1	2770	76.5	79.7	78.5	0.79	0.86	0.89	1.63	2810	75.5	80.1	80.0	0.73	0.82	0.86	1.52
1.1	1.5	2790	78.2	80.4	79.3	0.74	0.84	0.88	2.39	2825	76.0	79.8	79.8	0.64	0.76	0.84	2.28
1.5	2	2855	81.8	83.8	83.0	0.75	0.84	0.88	3.12	2880	80.0	83.7	83.8	0.67	0.78	0.84	2.96
2.2	3	2820	82.8	83.6	83.3	0.75	0.84	0.87	4.61	2850	81.5	83.6	84.3	0.64	0.76	0.83	4.37
4	5.5	2880	85.5	87.5	87.2	0.80	0.86	0.89	7.83	2900	84.5	87.4	88.2	0.72	0.82	0.87	7.25
5.5	7.5	2930	84.5	87.5	88.2	0.77	0.85	0.89	10.6	2940	83.5	86.8	88.2	0.69	0.80	0.85	10.2
7.5	10	2915	87.0	89.0	88.8	0.81	0.87	0.90	14.3	2930	86.0	88.8	89.3	0.73	0.83	0.87	13.4
11	15	2920	89.5	90.8	90.2	0.80	0.87	0.90	20.6	2930	89.3	90.5	90.2	0.72	0.82	0.86	19.7
15	20	2935	90.1	91.2	91.0	0.81	0.87	0.89	28.1	2950	89.1	91.0	91.2	0.72	0.81	0.87	26.3
18.5	25	2940	90.7	92.0	91.5	0.81	0.87	0.89	34.5	2950	90.1	91.8	92.0	0.73	0.83	0.86	32.5
22	30	2945	91.0	92.1	92.0	0.82	0.82	0.90	40.4	2955	90.0	92.0	92.1	0.75	0.75	0.87	38.2
30	40	2960	90.5	92.1	92.6	0.80	0.87	0.89	55.3	2970	89.5	91.8	92.7	0.73	0.83	0.87	51.8
37	50	2960	91.7	93.0	93.0	0.80	0.87	0.89	67.9	2965	90.8	92.6	93.0	0.70	0.81	0.86	64.4
45	60	2960	91.9	93.4	93.5	0.86	0.9	0.92	79.5	2970	91.5	93.3	93.9	0.84	0.88	0.9	74.1
55	75	2960	91.8	93.2	93.5	0.87	0.91	0.92	97.1	2965	91.6	93.5	94	0.83	0.88	0.91	89.5
IV Pole - 1500 rpm																	
0.55	0.75	1420	70.0	73.5	75.0	0.61	0.73	0.81	1.38	1440	67.0	72.5	74.6	0.53	0.66	0.75	1.37
0.75	1	1430	73.0	75.0	77.0	0.60	0.70	0.78	1.90	1440	72.0	76.0	77.0	0.55	0.67	0.74	1.83
1.1	1.5	1410	77.0	78.4	79.0	0.67	0.77	0.84	2.52	1425	76.0	78.3	79.5	0.61	0.73	0.80	2.41
1.5	2	1410	78.0	79.0	79.8	0.68	0.78	0.84	3.40	1430	77.8	78.8	80.2	0.60	0.72	0.80	3.25
2.2	3	1400	80.0	81.0	80.5	0.71	0.80	0.85	4.88	1415	81.5	82.0	82.0	0.65	0.76	0.82	4.55
3	4	1400	81.0	82.0	81.3	0.68	0.78	0.83	6.75	1415	81.0	82.6	82.3	0.60	0.71	0.78	6.50
4	5.5	1420	86.5	87.5	86.7	0.74	0.84	0.89	7.88	1440	85.2	87.2	86.7	0.67	0.78	0.84	7.64
5.5	7.5	1460	86.7	88.3	88.3	0.73	0.82	0.87	10.9	1470	84.2	87.0	88.4	0.64	0.75	0.83	10.4
7.5	10	1465	87.0	88.6	88.4	0.75	0.84	0.88	14.6	1470	85.6	88.0	88.6	0.65	0.77	0.83	14.2
11	15	1455	88.3	89.6	89.2	0.71	0.80	0.83	22.6	1465	86.8	89.0	89.8	0.65	0.74	0.80	21.3
15	20	1450	89.5	90.5	89.5	0.73	0.81	0.84	30.3	1460	88.4	90.3	90.0	0.66	0.76	0.81	28.6
18.5	25	1465	90.3	91.3	91.3	0.72	0.81	0.85	36.2	1470	89.3	91.3	91.5	0.65	0.76	0.82	34.3
22	30	1465	90.0	91.0	91.3	0.72	0.81	0.85	43.1	1475	90.0	91.0	91.5	0.63	0.75	0.81	41.3
30	40	1470	92.2	93.0	92.6	0.78	0.84	0.86	57.2	1480	91.5	93.0	93.2	0.72	0.80	0.84	53.3
37	50	1475	91.6	92.4	92.5	0.79	0.86	0.89	68.3	1480	90.8	92.1	92.9	0.72	0.83	0.87	63.7
45	60	1475	91.3	92.8	93.5	0.80	0.87	0.89	82.2	1480	91.0	92.9	93.5	0.72	0.83	0.87	77.0
55	75	1475	92.8	93.5	93.4	0.83	0.88	0.91	98.3	1480	92.5	93.4	93.6	0.77	0.85	0.89	91.9
75	100	1480	92.8	93.9	94.2	0.85	0.89	0.90	134	1485	92.2	93.8	94.3	0.81	0.87	0.89	124
90	125	1480	92.6	94.1	94.2	0.84	0.88	0.90	161	1485	92.0	93.9	94.2	0.80	0.86	0.89	149
110	150	1480	92.8	93.6	94.2	0.80	0.86	0.88	202	1485	92.8	94.4	94.5	0.76	0.83	0.87	186
132	175	1480	93.5	94.9	95.1	0.81	0.86	0.89	237	1485	93.3	94.7	95.1	0.76	0.84	0.87	222
160	220	1480	93.0	95.0	95.4	0.81	0.86	0.88	290	1485	94.2	95.1	95.5	0.77	0.84	0.87	268
200	270	1485	94.2	95.0	95.1	0.84	0.87	0.89	359	1490	93.8	94.9	95.1	0.80	0.85	0.87	336
250	340	1485	94.5	95.2	95.7	0.82	0.87	0.89	446	1490	94.1	95.0	95.7	0.77	0.85	0.87	418
315	430	1485	95.0	95.8	96.1	0.83	0.87	0.89	560	1490	94.5	95.8	96.2	0.76	0.84	0.88	518
330	450	1485	95.2	96.0	96.1	0.85	0.89	0.90	580	1490	94.8	95.8	96.2	0.81	0.87	0.89	536
HIGH-OUTPUT DESIGN																	
0.75	1	1400	75.0	76.5	76.0	0.66	0.78	0.85	1.76	1430	72.0	76.0	76.2	0.59	0.71	0.81	1.69

[1)]For Pad Mounted, please consider frame size 180L.
[2)]Frame size 132M/L is not available for Pad Mounted.
For Pad Mounted version frame sizes up to 250S/M.

Smoke Extraction Motors Aluminium Frame - Single Speed - 400^{0}C/2 hours Improved Efficiency EFF2

Output		IEC Frame	Full load torque C_n (Nm)	Locked rotor current I_l/I_n	Locked rotor torque T_l/T_n	Break-down torque T_b/T_n	Inertia J kgm^2	Allowable locked rotor time Hot/Cold (s)	Weight (kg)	Sound dB (A)	Rated speed (rpm)	400 V						Full load current I_n (A)
												% of full load						
												Efficiency η			Power Factor (Cos φ)			
kW	HP											50	75	100	50	75	100	
VI Pole - 1000 rpm																		
0.37	0.5	80	3.78	4.5	2.5	2.5	0.00242	12/26	14	43	930	54.0	62.5	65.0	0.45	0.57	0.67	1.23
0.55	0.75	90S	5.73	5.5	2.1	2.4	0.00448	10/22	20	45	920	65.0	68.5	69.6	0.50	0.62	0.71	1.61
0.75	1	90S	7.68	5.5	2.2	2.3	0.00504	8/18	21	45	915	69.0	70.3	71.2	0.51	0.63	0.73	2.08
1.1	1.5	90L	11.4	5.2	2.3	2.4	0.00672	10/22	24	45	925	69.0	74.0	75.2	0.48	0.63	0.72	2.93
1.5	2	100L	14.9	4.8	2.2	2.5	0.01121	18/40	29	44	940	74.0	77.3	77.5	0.53	0.65	0.74	3.78
2.2	3	112M	22.4	5.0	2.2	2.3	0.01682	14/31	38	48	940	77.0	80.5	80.1	0.53	0.66	0.74	5.36
3	4	132S	29.6	5.3	1.9	2.2	0.03489	20/44	54	52	950	80.5	83.0	82.5	0.58	0.70	0.77	6.82
4	5.5	132M	41.1	6.0	2.1	2.2	0.05039	18/40	66	52	940	82.2	85.5	86.0	0.60	0.70	0.77	8.72
5.5	7.5	132M	54.9	6.4	2.2	2.4	0.06202	14/31	74	52	960	84.0	85.8	85.8	0.56	0.68	0.76	12.2
7.5	10	160M	72.4	6.1	2.3	2.5	0.12209	17/37	107	56	970	85.0	87.0	87.0	0.60	0.72	0.80	15.6
11	15	160L	109	6.6	2.4	2.9	0.17595	13/29	130	56	970	85.0	87.0	87.5	0.59	0.70	0.78	23.3
15	20	180L	145	8.5	2.5	2.3	0.33095	10/22	182	56	970	89.1	90.1	89.8	0.78	0.85	0.88	27.4
18.5	25	200L	180	6.0	2.3	2.3	0.37670	33/73	232	58	975	89.3	90.5	89.9	0.70	0.79	0.83	35.8
22	30	200L	216	6.0	2.2	2.3	0.41258	33/73	241	58	975	89.0	90.5	91.0	0.68	0.78	0.82	42.6
30	40	225S/M	285	7.2	2.6	2.7	0.98842	20/44	367	61	985	90.5	91.8	91.8	0.77	0.84	0.87	54.2
37	50	250S/M	358	7.5	2.7	2.6	1.22377	18/40	428	61	980	90.0	92.4	92.5	0.76	0.84	0.87	66.4
45	60	280S/M	428	6.8	2.0	2.6	2.29824	24/53	621	66	985	90.5	92.3	92.6	0.68	0.78	0.83	84.5
55	75	280S/M	535	7.0	2.0	2.5	2.64298	23/51	636	66	985	91.6	93.2	93.5	0.71	0.81	0.84	101
75	100	315S/M	713	6.7	2.3	2.5	3.44737	20/44	788	69	985	91.6	93.5	93.7	0.71	0.81	0.85	136
90	125	315S/M	891	6.3	2.1	2.3	3.67719	18/40	813	69	985	92.5	94.0	93.9	0.73	0.81	0.85	163
110	150	315S/M	1070	6.4	2.3	2.4	5.28596	18/40	988	69	985	93.4	94.5	94.6	0.71	0.80	0.84	200
132	175	355M/L	1242	6.1	2.0	2.3	8.10159	90/198	1100	73	990	92.5	94.7	94.7	0.65	0.75	0.80	251
160	220	355M/L	1561	6.2	1.9	2.1	9.53128	72/158	1526	73	990	93.0	95.0	95.4	0.67	0.77	0.82	295
200	270	355M/L	1916	6.3	2.1	2.3	12.3907	85/187	1754	73	990	93.5	94.5	94.8	0.70	0.78	0.81	376
250	340	355M/L	2400	6.1	2.2	2.2	14.7735	64/141	1916	73	995	94.0	95.1	95.6	0.70	0.79	0.82	460
315	430	355M/L*	3051	6.0	1.9	1.9	15.4883	38/84	1979	73	990	94.3	95.8	95.9	0.69	0.78	0.81	585
HIGH-OUTPUT DESIGN																		
0.55	0.75	80	5.66	4.5	2.3	2.3	0.00311	10/22	15	43	930	60.0	65.0	67.0	0.50	0.63	0.73	1.62
VIII Pole - 750 rpm																		
0.18	0.25	80	2.51	3.1	1.9	2.1	0.00242	16/35	14	42	700	40.0	49.0	54.2	0.43	0.53	0.62	0.77
0.25	0.33	80	3.41	3.0	1.8	1.8	0.00294	21/46	15	42	680	47.5	55.0	57.0	0.45	0.56	0.65	0.97
0.37	0.5	90S	5.16	4.0	1.9	1.9	0.00504	12/26	19	43	690	50.0	57.5	61.0	0.40	0.50	0.58	1.51
0.55	0.75	90L	7.75	4.0	1.8	1.8	0.00616	11/24	22	43	690	53.0	61.5	63.0	0.37	0.48	0.58	2.17
0.75	1	100L	10.2	4.2	2.0	2.1	0.00952	30/66	27	50	705	65.0	70.0	71.0	0.42	0.54	0.63	2.42
1.1	1.5	100L	15.3	4.1	1.5	1.9	0.01289	23/51	30	50	700	66.0	71.5	72.2	0.43	0.56	0.65	3.38
1.5	2	112M	20.1	4.6	2.3	2.5	0.02430	32/70	44	46	710	76.5	81.3	81.6	0.45	0.57	0.66	4.02
2.2	3	132S	29.7	6.2	2.2	2.5	0.07527	23/51	67	48	715	78.5	81.5	82.5	0.53	0.65	0.73	5.27
3	4	132M	39.9	5.8	2.1	2.4	0.08531	22/48	53	48	710	78.0	82.7	83.5	0.52	0.64	0.72	7.20
4	5.5	160M	53.3	5.4	2.0	2.4	0.12209	32/70	105	51	730	79.0	83.0	84.0	0.44	0.57	0.66	10.4
5.5	7.5	160M	72.7	5.4	1.9	2.2	0.14364	23/51	114	51	730	82.0	84.0	84.5	0.46	0.60	0.68	13.8
7.5	10	160L	97.6	4.9	1.7	2.0	0.16518	15/33	125	51	725	83.0	84.5	84.5	0.51	0.63	0.72	17.8
11	15	180L	146	7.3	2.0	2.2	0.30337	12/26	181	51	725	87.0	88.5	88.0	0.67	0.78	0.83	21.7
15	20	200L	194	5.0	1.7	1.8	0.41258	36/79	229	53	725	87.0	88.5	88.9	0.55	0.67	0.74	32.9
18.5	25	225S/M	241	6.9	1.9	2.5	0.84722	17/37	339	56	730	88.5	90.1	90.0	0.72	0.80	0.85	34.9
22	30	225S/M	289	7.5	2.0	2.4	0.98842	19/42	364	56	730	89.0	91.0	91.0	0.73	0.82	0.85	41.1
30	40	250S/M	385	7.9	2.0	2.6	1.22377	17/37	425	56	730	89.5	91.2	91.6	0.70	0.79	0.84	56.3
37	50	280S/M	478	6.5	1.8	2.1	2.29824	29/64	589	59	740	90.5	92.2	92.3	0.68	0.78	0.82	70.6
45	60	280S/M	573	6.9	1.8	1.9	2.64298	26/57	626	59	740	90.0	92.0	92.0	0.70	0.76	0.80	88.2
55	75	315S/M	712	6.5	1.9	2.2	3.10263	27/59	732	62	740	91.2	93.1	93.0	0.69	0.78	0.82	104
75	100	315S/M	949	6.6	1.9	2.2	4.36666	20/44	872	62	740	92.0	93.4	93.5	0.67	0.79	0.82	141
90	125	315S/M	1186	6.8	2.1	2.4	5.28596	23/51	1021	62	740	92.5	93.8	94.2	0.70	0.78	0.83	166
110	150	355M/L	1424	6.4	1.5	2.2	11.9324	41/90	1390	70	740	92.5	94.1	94.5	0.63	0.74	0.80	210
132	175	355M/L	1661	6.5	1.6	2.2	13.1885	47/103	1445	70	740	93.0	94.5	94.8	0.63	0.73	0.79	254
160	220	355M/L	2088	6.6	1.6	2.2	16.3286	42/92	1620	70	740	93.3	94.7	94.7	0.64	0.75	0.80	305
200	270	355M/L	2563	6.8	1.6	2.1	19.4687	37/81	1800	70	740	93.3	94.6	95.2	0.60	0.72	0.79	384
HIGH-OUTPUT DESIGN																		
55	75	280S/M	717	6.5	1.8	1.9	3.10263	27/59	696	59	735	90.9	93.1	93.3	0.69	0.78	0.82	104

Notes:
**Class "F" insulation with ΔT105K*
Standard voltage, connection and frequency: 220-240V Δ 50Hz 380-415V Δ 50Hz
380-415V Y 50Hz 660-690V Y 50Hz
The values shown are subject to change without prior notice. To obtain guaranteed values please access our website.

Smoke Extraction Motors Aluminium Frame - Single Speed - 400^{0}C/2 hours Improved Efficiency EFF2

Output		380 V								415 V							
		Rated speed (rpm)	% of full load						Full load current I_n (A)	Rated speed (rpm)	% of full load						Full load current I_n (A)
			Efficiency η			Power Factor (Cos φ)					Efficiency η			Power Factor (Cos φ)			
kW	HP		50	75	100	50	75	100			50	75	100	50	75	100	
VI Pole - 1000 rpm																	
0.37	0.5	920	56.0	64.0	66.0	0.49	0.62	0.72	1.18	935	52.0	61.0	64.0	0.42	0.54	0.64	1.26
0.55	0.75	915	67.0	69.0	69.6	0.52	0.66	0.75	1.6	925	62.0	67.2	68.7	0.46	0.58	0.68	1.64
0.75	1	910	69.0	71.6	71.0	0.52	0.66	0.75	2.14	920	66.0	69.2	70.5	0.46	0.60	0.69	2.14
1.1	1.5	915	70.0	73.0	74.0	0.54	0.68	0.77	2.93	930	66.0	72.0	74.0	0.44	0.58	0.69	3.00
1.5	2	930	75.0	77.5	77.3	0.56	0.69	0.77	3.83	950	72.0	77.3	77.6	0.50	0.63	0.71	3.79
2.2	3	930	78.0	80.0	80.0	0.55	0.68	0.76	5.5	950	76.0	80.3	80.5	0.50	0.63	0.72	5.28
3	4	940	80.0	83.0	82.0	0.60	0.72	0.79	7.04	960	80.0	83.0	82.6	0.53	0.66	0.74	6.83
4	5.5	930	83.4	85.4	85.6	0.61	0.72	0.79	8.99	945	82.0	85.3	85.9	0.58	0.68	0.75	8.64
5.5	7.5	955	85.0	86.1	85.6	0.58	0.71	0.77	12.7	965	83.0	85.5	86.0	0.53	0.65	0.74	12.0
7.5	10	965	85.0	86.0	86.0	0.66	0.76	0.81	16.4	970	85.0	86.5	86.5	0.58	0.70	0.78	15.5
11	15	970	86.0	88.0	87.5	0.63	0.75	0.81	23.6	975	85.0	87.0	87.5	0.52	0.66	0.75	23.3
15	20	970	89.0	90.0	89.5	0.80	0.86	0.89	28.6	975	89.0	90.5	90.5	0.74	0.83	0.87	26.5
18.5	25	975	89.7	90.7	89.8	0.73	0.82	0.84	37.3	980	88.9	90.3	91.2	0.66	0.76	0.81	34.8
22	30	970	89.6	90.5	91.0	0.73	0.81	0.84	43.7	980	88.4	90.5	91.0	0.64	0.74	0.80	42.0
30	40	980	91.0	91.8	91.6	0.80	0.86	0.88	56.5	985	90.0	91.8	92.2	0.73	0.81	0.86	52.6
37	50	980	90.5	92.5	92.4	0.80	0.86	0.88	69.1	985	89.5	92.4	92.6	0.73	0.82	0.86	64.6
45	60	985	91.0	92.3	92.6	0.72	0.81	0.85	86.9	990	90.0	92.3	92.7	0.64	0.76	0.82	82.4
55	75	985	92.0	93.2	93.4	0.74	0.82	0.85	105	990	91.2	93.2	93.6	0.68	0.78	0.83	98.5
75	100	985	92.0	93.5	93.5	0.74	0.82	0.86	142	990	91.2	93.5	93.8	0.69	0.80	0.84	132
90	125	985	92.8	93.9	93.6	0.75	0.83	0.86	170	990	92.2	93.9	93.9	0.71	0.79	0.84	159
110	150	985	93.6	94.4	94.4	0.74	0.82	0.85	208	985	93.2	94.5	94.7	0.69	0.79	0.83	195
132	175	990	93.0	94.7	94.5	0.70	0.80	0.82	259	995	92.0	94.7	94.7	0.60	0.70	0.77	252
160	220	990	93.5	95.2	95.2	0.73	0.80	0.84	304	990	92.5	94.9	95.4	0.63	0.74	0.80	292
200	270	990	94.0	94.7	94.8	0.74	0.81	0.83	386	990	93.0	94.3	94.8	0.66	0.75	0.79	372
250	340	995	94.3	95.2	95.5	0.74	0.81	0.83	479	995	93.7	95.0	95.8	0.67	0.77	0.81	448
315	430	985	94.8	96.0	95.8	0.73	0.80	0.82	609	990	93.8	95.6	95.8	0.65	0.76	0.80	572
HIGH OUTPUT DESIGN																	
0.55	0.75	920	62.0	65.8	68.0	0.54	0.67	0.77	1.60	935	58.0	64.0	66.0	0.47	0.59	0.68	1.70
VIII Pole - 750 rpm																	
0.18	0.25	690	43.0	52.0	54.5	0.45	0.56	0.65	0.77	710	37.0	46.0	53.0	0.41	0.50	0.59	0.80
0.25	0.33	670	50.5	56.5	56.5	0.48	0.59	0.69	0.97	690	45.0	53.5	56.5	0.42	0.53	0.61	1.01
0.37	0.5	680	52.3	60.0	62.0	0.42	0.53	0.62	1.46	700	47.0	56.0	60.0	0.36	0.47	0.55	1.56
0.55	0.75	680	57.0	62.0	64.0	0.43	0.53	0.62	2.11	700	51.0	60.0	61.0	0.35	0.45	0.55	2.28
0.75	1	695	67.0	71.0	70.5	0.46	0.58	0.66	2.45	710	63.0	69.0	70.5	0.38	0.50	0.60	2.47
1.1	1.5	690	68.0	72.0	72.0	0.47	0.60	0.68	3.41	710	64.0	70.5	72.2	0.40	0.52	0.62	3.42
1.5	2	700	77.5	81.5	81.3	0.49	0.60	0.68	4.12	715	75.5	81.1	81.5	0.41	0.54	0.64	4.00
2.2	3	710	79.5	81.8	82.1	0.56	0.68	0.75	5.43	720	77.5	81.2	82.6	0.50	0.62	0.71	5.22
3	4	705	79.5	83.0	83.0	0.54	0.66	0.74	7.42	715	76.5	82.4	83.5	0.50	0.62	0.70	7.14
4	5.5	725	80.0	83.0	84.0	0.48	0.61	0.70	10.3	730	78.0	81.0	83.0	0.41	0.54	0.63	10.6
5.5	7.5	725	82.5	84.5	84.5	0.50	0.64	0.70	14.1	730	80.0	83.0	84.0	0.43	0.55	0.67	13.6
7.5	10	720	84.0	84.5	84.0	0.55	0.68	0.75	18.1	730	82.5	84.5	84.5	0.48	0.60	0.70	17.6
11	15	720	87.0	88.0	87.5	0.72	0.80	0.84	22.7	730	86.0	88.6	88.0	0.63	0.75	0.81	21.5
15	20	725	87.0	88.0	88.0	0.60	0.70	0.76	34.1	730	87.0	88.5	88.9	0.50	0.64	0.72	32.6
18.5	25	730	88.8	90.0	89.8	0.75	0.83	0.86	36.4	735	88.2	90.3	90.2	0.68	0.78	0.84	34.0
22	30	730	89.4	90.9	90.5	0.76	0.84	0.86	42.9	735	88.6	91.0	91.2	0.71	0.80	0.84	40.0
30	40	730	90.0	91.3	91.3	0.73	0.81	0.85	58.7	735	89.0	91.1	91.8	0.66	0.77	0.83	54.8
37	50	735	91.0	92.2	92.1	0.71	0.80	0.83	73.5	740	90.0	92.2	92.4	0.65	0.76	0.80	69.6
45	60	735	90.0	92.0	92.0	0.71	0.77	0.81	91.7	740	90.0	92.0	92.0	0.69	0.75	0.79	86.1
55	75	735	91.6	93.2	92.8	0.72	0.80	0.83	108	740	90.7	93.0	93.0	0.65	0.76	0.80	103
75	100	735	92.4	93.3	93.3	0.70	0.80	0.83	147	740	91.6	93.4	93.4	0.64	0.78	0.81	138
90	125	735	92.9	93.9	94.0	0.73	0.81	0.84	173	740	92.1	93.7	94.2	0.67	0.75	0.81	164
110	150	740	93.0	94.2	94.5	0.66	0.77	0.82	216	745	92.0	94.1	94.5	0.60	0.71	0.78	208
132	175	740	93.5	94.6	94.8	0.66	0.75	0.81	261	745	92.5	94.4	94.8	0.60	0.71	0.77	252
160	220	740	93.8	94.8	94.8	0.68	0.77	0.81	317	745	92.8	94.7	94.7	0.60	0.72	0.79	298
200	270	740	93.8	94.8	95.1	0.65	0.75	0.81	394	745	92.8	94.4	95.2	0.56	0.69	0.77	380
HIGH OUTPUT DESIGN																	
55	75	735	91.2	93.0	93.1	0.71	0.80	0.83	108	740	90.6	93.1	93.4	0.65	0.76	0.81	101

[1)]For Pad Mounted, please consider frame size 180L.
[2)]Frame size 132M/L is not available for Pad Mounted.
For Pad Mounted version frame sizes up to 250S/M.

Smoke Extraction Motors Aluminium Frame - Two Speed - 400^{0}C/2 hours Improved Efficiency EFF2 - Variable torque IV/II Pole - Dahlander Winding

Output		IEC Frame	Full load torque C_n (Nm)	Locked rotor current I_r/I_n	Locked rotor torque T_r/T_n	Break-down torque T_b/T_n	Inertia J kgm^2	Allowable locked rotor time Hot/Cold (s)	Weight (kg)	Sound dB (A)	Rated speed (rpm)	400 V						Full load current I_n (A)
												% of full load						
												Efficiency η			Power Factor (Cos φ)			
kW	HP											50	75	100	50	75	100	
50HZ - 400V - IV/II POLE (1500/3000 RPM) - Y / YY CONNECTION																		
0.2	0.27	80	1.35	4.5	2.0	2.5	0.00242	30/66	14	44	1400	64.0	68.0	68.5	0.48	0.61	0.70	0.60
0.8	1.08		2.69	6.0	2.5	3.2		8/18		59	2820	70.0	72.0	73.0	0.66	0.77	0.83	1.91
0.25	0.33	80	1.67	3.8	2.2	2.5	0.00294	30/66	15	44	1390	66.0	70.0	70.5	0.48	0.60	0.68	0.75
1.1	1.5		3.75	6.0	2.5	2.8		8/18		59	2810	74.0	75.0	75.0	0.71	0.83	0.88	2.41
0.37	0.5	90S	2.45	4.5	2.0	2.1	0.00476	18/40	20	47	1435	62.3	67.4	68.8	0.45	0.54	0.62	1.25
1.5	2		4.84	6.5	2.5	3.0		6/13		68	2900	68.0	75.0	76.4	0.62	0.73	0.80	3.54
0.5	0.68	90L	3.36	3.5	1.8	2.2	0.00616	13/29	22	47	1420	67.0	70.0	71.0	0.47	0.58	0.66	1.54
2.2	3		7.41	6.0	2.2	2.6		6/13		68	2845	75.0	77.8	78.9	0.71	0.80	0.87	4.63
0.65	0.88	100L	4.31	4.5	2.1	2.2	0.00765	22/48	30	51	1435	72.0	76.5	77.5	0.56	0.67	0.73	1.66
2.5	3.4		8.26	6.5	2.3	2.8		6/13		67	2890	78.0	80.0	81.0	0.70	0.81	0.86	5.18
0.8	1.08	100L	5.30	4.6	2.1	2.2	0.00918	18/40	33	51	1430	75.0	77.0	77.5	0.57	0.68	0.75	1.99
3.1	4.2		10.2	7.2	2.3	2.8		6/13		67	2890	80.0	81.5	82.0	0.73	0.83	0.88	6.20
1.1	1.5	112M	7.32	5.0	1.8	2.6	0.01741	22/48	43	55	1440	74.0	78.5	79.0	0.55	0.66	0.72	2.79
4.4	5.9		14.3	7.8	2.4	3.0		7/15		64	2890	82.5	83.5	84.0	0.76	0.84	0.88	8.59
1.5	2	132S	9.62	5.6	2.0	2.4	0.02430	38/84	58	58	1460	77.0	81.5	83.0	0.50	0.62	0.71	3.67
6	8		19.2	8.3	2.5	3.0		6/13		68	2930	83.5	85.0	85.0	0.73	0.84	0.89	11.4
2	2.7	132M	12.9	5.8	1.9	2.0	0.02804	38/84	67	58	1470	80.0	82.0	83.0	0.51	0.63	0.72	4.83
8	10.8		25.9	8.5	2.6	2.7		6/13		68	2930	82.8	84.0	85.0	0.77	0.85	0.89	15.3
3	4	160M	19.1	6.0	2.0	2.4	0.05294	28/62	118	62	1470	80.0	83.0	84.0	0.50	0.63	0.71	7.26
12	16		38.1	8.5	2.5	2.9		6/13		70	2950	83.0	85.0	86.0	0.71	0.81	0.87	23.1
4	5.5	160L	26.3	6.0	2.2	2.4	0.06766	30/66	135	62	1470	83.5	84.5	85.0	0.50	0.63	0.71	9.57
16	21.7		51.7	8.6	2.6	3.0		6/13		70	2950	85.0	86.5	87.0	0.73	0.82	0.87	30.5
5.5	7.5	180M[1)]	36.0	4.7	1.6	2.7	0.17939	40/88	160	64	1465	84.5	87.0	87.0	0.54	0.65	0.72	12.7
20	27.2		64.7	9.2	2.7	3.5		6/13		70	2955	87.5	89.5	90.0	0.76	0.84	0.89	36.0
6.3	8.6	180L	41.2	4.7	1.6	2.4	0.21527	35/77	180	64	1465	86.5	88.0	88.5	0.54	0.65	0.72	14.3
25	34		81.0	8.9	2.7	3.4		6/13		70	2950	90.0	90.7	91.0	0.76	0.85	0.89	44.6
8.5	11.5	200L	55.0	4.2	2.0	2.0	0.34474	50/110	242	67	1470	88.5	89.5	90.0	0.58	0.69	0.74	18.4
33	44.8		106	8.2	3.2	2.8		10/22		74	2960	89.5	91.0	91.2	0.80	0.87	0.89	58.7
9	12.2	225S/M	57.71	6.1	2.3	2.6	0.39467	28/62	366	70	1485	85.0	88.0	88.5	0.55	0.65	0.72	20.4
37	50		118.25	8.7	2.6	3.0		6/13		78	2970	88.5	90.0	90.5	0.81	0.87	0.90	65.6
12	16.3	225S/M	77.88	6.3	2.2	2.4	0.76985	23/51	385	70	1470	86.0	87.0	88.2	0.57	0.67	0.73	26.9
46	63		149.5	8.8	2.4	2.8		6/13		78	2960	85.0	88.0	90.6	0.76	0.84	0.90	81.4
15	20	250S/M	94.92	5.2	1.9	2.2	1.08479	32/70	450	70	1480	88.5	89.7	90.5	0.64	0.73	0.76	31.5
55	75		177.37	8.5	2.3	2.7		6/13		78	2970	89.8	90.8	91.0	0.85	0.89	0.91	95.9

Notes:
**Class "F" insulation with ΔT105K*
Standard voltage, connection and frequency: 220-240V Δ 50Hz *380-415V Δ 50Hz*
380-415V Y 50Hz *660-690V Y 50Hz*
The values shown are subject to change without prior notice. To obtain guaranteed values please access our website.

Smoke Extraction Motors Aluminium Frame - Two Speed - 400^{0}C/2 hours
Improved Efficiency EFF2 - Variable torque VIII/IV Pole - Dahlander Winding

Output		IEC Frame	Full load torque C_n (Nm)	Locked rotor current I_l/I_n	Locked rotor torque T_l/T_n	Break-down torque T_b/T_n	Inertia J kgm^2	Allowable locked rotor time Hot/Cold (s)	Weight (kg)	Sound dB (A)	Rated speed (rpm)	400 V						Full load current I_n (A)
												% of full load						
												Efficiency η			Power Factor (Cos φ)			
kW	HP											50	75	100	50	75	100	
50Hz - 400V - VIII/IV pole (750/1500 rpm) - Y / YY connection																		
0.15	0.2	80	1.98	3.1	2.3	2.5	0.00294	20/44	15	42	710	31.0	39.0	46.0	0.47	0.54	0.62	0.76
0.6	0.8		3.90	5.5	2.2	2.7		6/13		51	1440	57.0	65.0	68.5	0.51	0.64	0.72	1.76
0.2	0.27	80	2.75	2.7	1.7	2.0	0.00294	18/40	15	42	690	37.0	45.0	49.5	0.50	0.60	0.66	0.88
0.8	1.08		5.36	4.7	1.7	2.1		6/13		51	1415	64.0	69.0	70.0	0.59	0.73	0.83	1.99
0.3	0.4	90S	3.99	3.1	2.2	2.2	0.00560	28/62	20	43	705	46.0	54.0	57.0	0.42	0.50	0.59	1.29
1.2	1.6		7.86	5.5	2.3	2.7		6/13		53	1430	72.0	75.0	76.0	0.55	0.69	0.78	2.92
0.4	0.55	90L	5.52	3.2	2.2	2.3	0.00672	17/37	23	43	700	49.0	56.0	59.0	0.40	0.50	0.58	1.69
1.6	2.17		10.7	5.7	2.3	2.6		6/13		54	1420	73.0	76.0	77.0	0.57	0.70	0.79	3.80
0.55	0.75	100L	7.53	3.5	2.3	2.5	0.01345	20/44	30	50	700	55.0	63.0	65.0	0.40	0.52	0.61	2.00
2.2	3		14.7	6.9	2.5	2.8		6/13		55	1430	77.0	79.0	80.0	0.62	0.75	0.82	4.84
0.7	0.95	100L	9.67	3.6	2.2	2.4	0.01457	20/44	33	50	690	58.0	64.5	66.5	0.42	0.53	0.63	2.41
2.8	3.8		18.9	6.0	2.4	2.6		6/13		55	1410	77.5	80.0	80.0	0.64	0.77	0.84	6.01
1	1.4	112M	13.9	4.0	2.0	2.1	0.02617	18/40	43	46	710	70.0	73.0	74.0	0.50	0.64	0.71	2.75
3.8	5.2		25.4	7.0	2.6	2.8		6/13		57	1440	76.0	78.5	80.0	0.62	0.76	0.83	8.26
1.3	1.77	132S	17.0	6.2	2.1	2.8	0.07527	20/44	68	48	730	72.0	75.0	76.5	0.48	0.61	0.70	3.50
5	6.8		33.2	8.5	2.7	2.8		6/13		62	1440	77.0	79.0	80.0	0.71	0.82	0.87	10.4
1.8	2.45	132M/L[2)]	23.7	6.2	2.1	2.5	0.09535	21/46	80	48	725	76.0	79.0	80.0	0.50	0.63	0.70	4.64
7.2	9.8		48.1	8.5	2.7	2.7		6/13		62	1430	79.0	81.0	82.0	0.71	0.82	0.88	14.4
3	4	160M	38.8	4.3	1.7	2.1	0.14364	30/66	119	51	725	81.0	82.0	82.5	0.54	0.67	0.75	7.00
11	15		72.4	7.0	2.4	2.7		6/13		64	1455	84.0	85.5	86.0	0.71	0.83	0.88	21.0
3.5	4.8	160L	46.5	4.2	1.9	2.2	0.18673	30/66	135	51	725	81.0	83.0	83.0	0.51	0.64	0.72	8.45
14	19		91.7	7.2	2.6	2.9		6/13		64	1455	84.0	86.0	86.5	0.71	0.83	0.88	26.5
4.3	5.8	180M[1)]	55.8	4.0	1.7	2.0	0.19734	20/44	162	51	730	80.0	83.0	84.2	0.39	0.50	0.58	12.7
17	23		110	8.0	2.4	2.8		7/15		69	1475	88.6	89.5	89.5	0.62	0.75	0.82	33.4
5	6.8	180L	65.4	5.1	2.0	2.0	0.33095	20/44	177	51	730	79.0	82.7	82.7	0.40	0.54	0.62	14.1
20	27		129	8.8	2.5	2.6		7/15		69	1470	85.0	88.0	89.0	0.65	0.77	0.84	38.6
6.5	8.8	200L	84.1	3.6	1.9	2.0	0.38609	20/44	235	53	735	83.5	86.5	87.0	0.43	0.54	0.60	18.0
28	38		180	7.4	2.6	2.8		8/18		70	1480	90.5	91.5	91.5	0.71	0.81	0.85	52.0
8	10.8	200L*	104	4.0	1.8	2.0	0.41370	20/44	255	53	730	82.5	86.0	87.0	0.41	0.53	0.61	21.8
35	47		225	7.8	2.4	2.8		6/13		70	1470	89.0	90.0	90.5	0.66	0.78	0.83	67.3
9.2	12.5	225S/M	119	5.5	2.8	3.1	0.75686	18/40	360	56	740	81.0	85.0	87.0	0.43	0.53	0.60	25.4
37	50		237	9.5	3.1	4.2		6/13		70	1485	86.5	89.0	90.0	0.62	0.74	0.80	74.2
11	15	225S/M	142	5.0	2.2	2.2	1.12963	20/44	425	56	740	83.0	86.0	87.0	0.47	0.58	0.67	27.2
44	59.7		283	8.0	2.4	3.0		8/18		74	1480	89.0	90.5	91.0	0.73	0.83	0.87	80.2
14.7	19.9	250S/M	190	4.6	1.8	2.0	1.55324	18/40	450	56	735	86.0	87.5	88.0	0.45	0.58	0.66	36.5
55	75		356	9.0	2.6	3.0		6/13		74	1480	89.0	90.5	91.0	0.71	0.82	0.87	100
17	23	280S/M	218	4.2	1.5	1.6	3.33245	20/44	650	59	740	83.2	86.4	88.6	0.47	0.57	0.63	44.0
68	92.3		437	8.0	2.5	2.5		10/22		74	1485	85.1	89.0	90.0	0.76	0.83	0.86	127
20	27	280S/M	256	4.2	1.6	1.6	3.67719	20/44	690	59	740	83.9	87.3	89.0	0.46	0.57	0.61	53.2
80	109		516	8.6	2.7	2.8		10/22		78	1485	86.5	89.0	90.3	0.76	0.81	0.84	152
27	37	315S/M	351	4.0	1.7	1.7	4.82631	20/44	890	62	740	81.9	86.8	88.5	0.40	0.50	0.56	78.6
110	150		709	8.5	2.6	2.7		10/22		78	1485	88.0	90.2	91.3	0.69	0.72	0.82	212
33	44.8	315S/M	425	4.0	1.7	1.8	5.40087	20/44	990	62	740	83.5	87.8	89.4	0.40	0.51	0.58	91.9
130	177		837	8.4	2.6	2.7		10/22		78	1485	87.3	90.0	91.3	0.65	0.76	0.82	251
40	55	315S/M*	522	4.0	1.6	1.6	5.40087	20/44	1000	62	740	89.2	91.0	91.3	0.43	0.59	0.59	107
160	217		1026	8.0	2.3	2.5		10/22		78	1485	91.3	92.8	93.9	0.74	0.84	0.84	293

[1)]For Pad Mounted, please consider frame size 180L.
[2)]Frame size 132M/L is not available for Pad Mounted.
For Pad Mounted version frame sizes up to 250S/M.

Smoke Extraction Motors Aluminium Frame - Two Speed - 400^{0}C/2 hours Improved Efficiency EFF2 - Variable torque VI/IV Pole - Independent Winding

Output		IEC Frame	Full load torque C_n (Nm)	Locked rotor current I_l/I_n	Locked rotor torque T_l/T_n	Break-down torque T_b/T_n	Inertia J kgm^2	Allowable locked rotor time Hot/Cold (s)	Weight (kg)	Sound dB (A)	Rated speed (rpm)	400 V						Full load current I_n (A)
												% of full load						
												Efficiency η			Power Factor (Cos φ)			
kW	HP											50	75	100	50	75	100	
50Hz - 400V - VI/IV pole (1000/1500 rpm) - Y / Y connection																		
0.2	0.27	80	1.96	3.7	1.9	2.7	0.00328	9/20	11	48	970	31.0	40.0	46.0	0.44	0.52	0.60	1.05
0.55	0.75		3.63	5.0	1.9	2.7		6/13		54	1450	52.0	60.0	65.7	0.48	0.61	0.69	1.75
0.25	0.33	80	2.39	3.9	2.5	3.4	0.00346	7/15	12	48	970	33.0	41.5	48.0	0.42	0.50	0.57	1.32
0.75	1		4.91	4.7	1.4	2.1		6/13		54	1430	62.0	67.0	68.0	0.59	0.72	0.82	1.94
0.3	0.4	90S	2.90	5.1	2.6	3.2	0.00560	9/20	16	45	970	38.0	48.0	53.0	0.39	0.46	0.54	1.51
1.1	1.5		7.32	5.4	2.0	2.6		6/13		57	1440	65.0	71.0	72.5	0.51	0.65	0.75	2.92
0.37	0.5	90L	3.62	4.5	2.1	2.6	0.00672	8/18	20	45	970	40.0	50.0	55.0	0.43	0.50	0.60	1.62
1.5	2		9.76	5.5	1.9	2.4		6/13		57	1440	70.0	74.0	75.0	0.55	0.69	0.79	3.65
0.6	0.82	100L	5.94	5.0	2.2	3.1	0.01345	9/20	25	44	970	51.0	59.0	63.0	0.41	0.50	0.59	2.33
1.7	2.3		11.1	6.5	2.1	2.7		6/13		59	1450	68.0	73.0	75.0	0.52	0.65	0.74	4.42
0.7	0.95	100L	6.88	5.5	2.8	3.5	0.01000	10/22	27	44	970	57.0	64.0	68.0	0.40	0.50	0.60	2.48
2.2	3		14.7	6.0	1.7	2.2		6/13		59	1430	76.0	77.0	77.0	0.64	0.77	0.84	4.91
1	1.36	112M	9.70	6.2	3.0	3.5	0.02617	7/15	36	48	985	54.0	63.0	68.0	0.37	0.46	0.55	3.86
3	4		19.2	7.6	2.6	3.0		6/13		61	1460	76.0	80.0	81.0	0.58	0.70	0.78	6.85
1.5	2	132S	14.2	7.0	3.0	3.8	0.05071	8/18	68	52	990	64.0	71.0	76.0	0.35	0.45	0.53	5.38
4.5	6		28.8	7.5	2.8	3.1		8/18		65	1465	76.0	80.0	82.0	0.58	0.70	0.78	10.2
2.2	3	132M	21.3	7.4	2.8	3.2	0.06242	7/15	79	52	990	72.0	78.0	80.0	0.37	0.48	0.57	6.96
6	8.1		38.8	7.8	2.5	3.1		6/13		65	1465	75.0	80.0	82.0	0.57	0.70	0.78	13.7
2.5	3.4	160M	24.4	7.0	2.5	3.6	0.11491	12/26	96	56	980	74.5	79.0	81.0	0.49	0.64	0.74	6.02
5.5	7.5		35.7	7.5	2.0	3.3		6/13		68	1475	75.5	80.0	81.5	0.60	0.74	0.83	11.7
3.3	4.5	160M	32.4	4.0	2.0	2.3	0.10610	18/40	120	56	975	75.5	78.5	79.0	0.48	0.61	0.69	8.74
10	13.6		64.8	7.0	3.0	3.2		7/15		68	1475	83.0	86.0	87.0	0.56	0.69	0.76	22.0
3.5	4.8	160M	34.4	6.6	2.3	3.2	0.14364	9/20	118	56	980	77.0	81.0	82.0	0.53	0.68	0.78	7.90
7.5	10		47.6	8.0	2.2	3.5		6/13		68	1475	78.0	82.0	83.5	0.60	0.75	0.83	15.6
4.5	6	160L	43.2	4.5	1.9	2.0	0.13131	8/18	135	56	975	77.0	79.0	79.0	0.56	0.68	0.75	11.0
14	19		90.8	7.0	3.0	3.0		8/18		68	1470	84.5	87.0	88.0	0.66	0.77	0.82	28.0
5	6.8	180M[1)]	48.5	8.0	2.2	2.7	0.27579	6/13	163	56	985	85.0	86.0	86.0	0.73	0.83	0.87	9.65
11	15		71.7	10.0	2.6	3.3		5/11		71	1470	86.5	88.0	88.5	0.85	0.90	0.92	19.5
6.5	8.8	180M[1)]	63.1	7.6	2.1	2.9	0.33308	5/11	195	56	980	85.5	86.0	86.3	0.73	0.83	0.87	12.5
16	21.7		104.0	8.5	2.4	2.9		5/11		71	1465	88.0	88.5	88.5	0.89	0.91	0.92	28.4
8.5	11.5	180L	82.0	8.7	2.5	3.5	0.37922	5/11	230	56	985	86.5	87.5	87.5	0.68	0.80	0.86	16.3
20	27.2		130.4	9.0	2.4	3.3		5/11		71	1465	88.5	89.0	89.0	0.86	0.91	0.93	34.9
9	12.2	200L	86.6	8.1	3.0	3.2	0.50550	7/15	280	58	990	84.5	87.5	88.5	0.58	0.70	0.79	18.6
26	35.5		168.5	7.5	2.5	3.1		13/29		74	1480	88.5	90.5	90.5	0.74	0.83	0.87	47.7
12	16	225S/M	113.5	8.3	3.5	3.5	0.77479	9/20	379	61	990	82.0	85.5	87.0	0.50	0.62	0.71	28.0
34	46.2		218.5	8.5	2.5	3.2		6/13		76	1485	87.0	89.0	89.0	0.72	0.82	0.87	63.4
14	19	225S/M	134.8	8.0	3.2	3.3	0.84523	5/11	433	61	990	81.5	85.5	87.0	0.48	0.61	0.71	32.7
40	55		260.2	9.0	2.9	3.5		5/11		76	1485	88.5	90.5	91.0	0.71	0.81	0.87	72.9
18	24.4	250S/M	173.1	8.1	3.3	3.6	1.16219	9/20	520	61	990	86.0	88.0	89.0	0.51	0.65	0.73	40.0
50	68		321.6	8.6	2.6	3.4		5/11		76	1485	90.0	91.5	92.0	0.73	0.83	0.87	90.2
25	34	280S/M	241.2	8.0	3.6	3.2	2.58594	11/24	685	66	990	84.0	87.5	89.0	0.50	0.61	0.69	58.8
70	95		449.3	7.5	2.3	2.8		20/44		81	1485	90.5	92.0	93.0	0.78	0.85	0.87	125
28	38	280S/M	269.6	7.1	3.1	2.7	2.82838	24/53	748	66	990	86.0	89.0	90.5	0.55	0.66	0.73	61.2
80	109		513.8	9.0	2.7	3.4		12/26		81	1490	89.0	91.5	92.6	0.71	0.80	0.85	147
34	46	315S/M	324.7	8.8	3.7	3.4	3.39405	8/18	898	69	995	85.0	88.0	90.0	0.49	0.61	0.69	79.0
95	129		610.2	8.1	2.9	2.9		15/33		81	1485	91.0	92.7	93.5	0.79	0.85	0.88	167
40	54.3	315S/M	385.3	7.0	3.3	3.3	3.79810	15/33	1005	69	990	88.5	90.5	91.5	0.50	0.62	0.70	90.1
115	156		735.4	9.0	3.0	3.8		11/24		81	1490	91.4	93.2	93.9	0.62	0.73	0.80	221
45	60	315S/M	425.7	6.5	2.7	2.5	3.79810	8/18	1005	69	990	90.0	91.0	91.5	0.60	0.71	0.77	92.2
125	170		801.4	9.0	2.9	3.5		13/29		81	1490	93.0	94.0	94.5	0.70	0.80	0.83	230
55	75	315S/M	532.1	7.2	3.2	2.9	3.79810	5/11	1005	69	990	90.0	91.0	91.6	0.56	0.68	0.75	116
145	197		931.8	8.0	2.5	3.0		9/20		81	1485	93.5	94.5	94.5	0.73	0.83	0.84	264

Notes:
**Class "F" insulation with ΔT105K*
Standard voltage, connection and frequency: 220-240V Δ 50Hz *380-415V Δ 50Hz*
380-415V Y 50Hz *660-690V Y 50Hz*
The values shown are subject to change without prior notice. To obtain guaranteed values please access our website.

Smoke Extraction Motors Aluminium Frame - Two Speed - 400^{0}C/2 hours Improved Efficiency EFF2 - Constant torque IV/II Pole - Dahlander Winding

Output		IEC Frame	Full load torque C_n (Nm)	Locked rotor current I_l/I_n	Locked rotor torque T_l/T_n	Break-down torque T_b/T_n	Inertia J kgm^2	Allowable locked rotor time Hot/Cold (s)	Weight (kg)	Sound dB (A)	Rated speed (rpm)	400 V						Full load current I_n (A)
												% of full load						
												Efficiency η			Power Factor (Cos φ)			
kW	HP											50	75	100	50	75	100	
50Hz - 400V - IV/II pole (1500/3000 rpm) - Δ / YY connection																		
0.48	0.65	80	3.31	4.0	2.3	2.3	0.00079	20/44	14	44	1380	61.0	67.0	68.1	0.50	0.62	0.72	1.41
0.60	0.82		2.04	6.1	2.5	2.8		12/26		59	2830	69.0	72.0	73.0	0.72	0.82	0.87	1.36
0.70	0.95	80	4.91	4.0	2.2	2.2	0.00096	18/40	15	44	1360	65.0	68.0	68.4	0.50	0.62	0.71	2.08
0.85	1.15		2.86	6.2	2.5	2.8		10/22		59	2820	72.0	75.5	76.5	0.73	0.82	0.88	1.82
1.1	1.5	90S	7.53	5.0	2.1	2.2	0.00504	7/15	20	47	1400	71.0	73.5	74.0	0.66	0.78	0.84	2.55
1.4	1.9		4.85	6.0	2.2	2.2		6/13		68	2750	68.0	72.0	73.0	0.70	0.81	0.90	3.08
1.5	2	90L	9.96	5.2	2.3	2.4	0.00616	8/18	22	47	1410	73.0	75.3	76.0	0.61	0.76	0.83	3.43
1.9	2.6		6.50	5.5	2.3	2.5		6/13		68	2810	68.0	72.0	72.5	0.74	0.84	0.90	4.20
2	2.7	100L	13.5	6.0	2.4	2.4	0.00918	12/26	34	51	1410	72.4	75.5	76.2	0.62	0.74	0.83	4.56
2.4	3.3		8.08	6.7	2.4	2.5		8/18		67	2870	72.0	74.0	76.0	0.75	0.85	0.89	5.12
2.6	3.5	100L	17.4	5.5	2.4	2.5	0.00918	8/18	34	51	1410	74.0	77.3	78.0	0.62	0.74	0.83	5.80
3.1	4.2		10.3	6.8	2.5	2.8		6/13		67	2870	74.0	77.0	77.5	0.67	0.80	0.87	6.64
3.7	5	112M	24.6	6.0	2.3	2.3	0.01607	8/18	45	55	1430	79.5	80.0	80.0	0.68	0.80	0.86	7.76
4.4	5.9		14.4	7.3	2.4	2.7		6/13		64	2885	79.0	80.0	80.5	0.77	0.86	0.91	8.67
4.9	6.6	132S	32.0	6.5	1.7	2.0	0.04264	8/18	62	58	1450	82.0	83.0	83.0	0.78	0.86	0.89	9.57
5.9	7.9		19.2	6.5	2.0	2.3		6/13		68	2890	77.5	78.5	79.0	0.82	0.89	0.92	11.7
6.8	9.2	132M	44.6	6.4	1.6	2.0	0.05427	7/15	68	58	1450	83.0	84.0	84.0	0.75	0.84	0.88	13.3
8	10.9		26.3	6.5	2.0	2.3		6/13		68	2910	79.0	81.0	82.0	0.75	0.87	0.91	15.5
9.5	12.9	160M	62.5	5.0	2.0	2.1	0.09535	20/44	110	62	1450	83.5	84.2	85.0	0.77	0.84	0.86	18.8
11	15		35.8	8.0	2.8	2.8		10/22		70	2940	80.0	82.1	83.0	0.78	0.86	0.87	22.0
12	16.3	160L*	79.0	5.0	1.9	2.0	0.11542	20/44	126	62	1450	83.9	85.5	86.0	0.78	0.85	0.87	23.1
15	20		48.3	7.0	2.1	2.6		8/18		70	2910	82.5	85.0	85.4	0.85	0.90	0.92	27.6
15	20	180M[1)]	96.2	6.3	2.2	2.3	0.19733	17/37	170	64	1460	86.5	87.7	88.0	0.72	0.81	0.86	28.6
18	24.5		58.3	7.5	2.3	2.8		10/22		70	2950	86.5	87.5	88.0	0.84	0.89	0.92	32.1
18	24.5	180L	117	6.7	2.2	2.4	0.22424	15/33	190	64	1465	87.5	88.7	89.0	0.71	0.81	0.85	34.3
21.5	29.2		69.5	8.5	2.5	2.9		9/20		70	2950	86.5	88.0	88.7	0.79	0.87	0.90	38.9
26	35	200L	167	6.2	2.0	2.2	0.35853	22/48	250	67	1475	89.0	90.0	90.5	0.69	0.79	0.84	49.4
33	45		107	8.0	2.2	2.5		8/18		74	2950	85.5	88.0	88.8	0.83	0.89	0.91	58.9
32	43.5	225S/M	206	8.1	2.6	3.3	0.69987	11/24	350	70	1480	89.0	90.1	90.6	0.76	0.83	0.88	57.9
38	52		123	8.7	2.6	3.3		8/18		78	2960	84.6	87.3	88.5	0.83	0.87	0.89	69.6
38	52	225S/M	247	7.8	2.3	2.6	0.76985	12/26	380	70	1480	89.0	90.4	91.0	0.75	0.83	0.88	68.5
45	60		142	8.3	2.5	2.8		7/15		78	2960	85.0	87.9	89.0	0.77	0.84	0.87	83.9
46	63	250S/M	301	8.0	2.3	2.6	0.97981	7/15	440	70	1470	89.2	90.8	91.4	0.76	0.83	0.88	82.5
55	75		179	8.6	2.2	2.8		6/13		78	2940	85.5	88.4	89.5	0.82	0.87	0.90	98.6

[1)]For Pad Mounted, please consider frame size 180L.
[2)]Frame size 132M/L is not available for Pad Mounted.
For Pad Mounted version frame sizes up to 250S/M.

Smoke Extraction Motors Aluminium Frame - Two Speed - 400^{0}C/2 hours
Improved Efficiency EFF2 - Constant torque VIII/IV Pole - Dahlander Winding

Output		IEC Frame	Full load torque C_n (Nm)	Locked rotor current I_l/I_n	Locked rotor torque T_l/T_n	Break-down torque T_b/T_n	Inertia J kgm^2	Allowable locked rotor time Hot/Cold (s)	Weight (kg)	Sound dB (A)	Rated speed (rpm)	400 V						Full load current I_n (A)
												% of full load						
												Efficiency η			Power Factor (Cos φ)			
kW	HP											50	75	100	50	75	100	
50Hz - 400V - VIII/IV pole (750/1500 rpm) - Δ / YY connection																		
0.27	0.37	80	3.79	2.5	1.8	1.8	0.00294	10/22	15	42	685	35.0	41.0	48.0	0.46	0.55	0.64	1.27
0.4	0.55		2.72	4.2	1.6	1.8		9/20		51	1420	65.0	68.0	69.1	0.60	0.71	0.81	1.03
0.4	0.54	90S	5.42	3.2	2.0	2.0	0.00504	13/29	19	43	700	40.0	50.0	53.0	0.42	0.52	0.60	1.82
0.7	0.95		4.77	5.0	1.8	2.0		8/18		53	1400	71.5	73.0	73.0	0.68	0.80	0.86	1.61
0.52	0.71	90L	7.12	3.3	2.0	2.0	0.00672	8/18	23	43	700	45.0	53.0	57.0	0.42	0.53	0.63	2.09
0.9	1.22		6.16	5.2	1.8	2.0		7/15		54	1390	73.5	75.0	75.0	0.70	0.81	0.86	2.01
0.7	0.95	100L	9.40	4.2	1.9	2.2	0.01121	13/29	29	50	710	60.0	66.0	68.0	0.42	0.53	0.64	2.32
1.1	1.5		7.32	5.8	2.0	2.4		6/13		55	1440	71.0	75.0	75.0	0.61	0.74	0.82	2.58
1.1	1.5	100L	15.1	4.2	1.9	2.3	0.01289	12/26	31	50	700	62.0	67.0	68.5	0.44	0.56	0.66	3.51
1.8	2.45		12.0	5.5	2.1	2.4		6/13		55	1430	70.0	75.0	75.0	0.64	0.75	0.82	4.22
1.5	2	112M	19.5	5.0	2.5	2.5	0.02617	8/18	45	46	720	66.0	71.0	75.0	0.43	0.53	0.64	4.51
2.5	3.4		16.6	7.0	2.5	2.7		6/13		57	1440	78.0	80.0	80.5	0.72	0.82	0.88	5.09
1.9	2.58	132S	25.2	6.3	2.6	2.6	0.07527	7/15	68	48	720	70.0	74.5	76.0	0.44	0.57	0.67	5.39
3.7	5		24.6	7.0	2.4	2.4		6/13		62	1430	79.2	80.1	82.0	0.78	0.87	0.90	7.24
3.3	4.5	132M/L[2)]	43.9	6.3	2.6	2.8	0.09535	10/22	80	48	720	74.0	77.0	78.0	0.47	0.60	0.70	8.72
5.5	7.5		36.8	7.5	2.7	2.7		6/13		62	1430	79.6	80.6	82.5	0.78	0.87	0.90	10.7
3.7	5	160M	48.1	5.4	2.3	2.8	0.12927	10/22	119	51	730	72.5	77.5	79.5	0.43	0.55	0.65	10.3
7	9.5		46.0	6.5	2.2	2.6		6/13		64	1450	83.5	84.2	84.5	0.79	0.87	0.90	13.3
5.5	7.5	160M	73.2	5.0	2.1	2.4	0.14364	15/33	119	51	720	74.0	77.5	79.6	0.48	0.60	0.70	14.2
8.8	12		58.1	6.5	2.1	2.4		7/15		64	1450	83.2	84.3	84.5	0.79	0.86	0.88	17.1
7	9.5	160L	92.0	5.0	2.3	2.4	0.16518	12/26	127	51	725	75.0	79.5	80.5	0.46	0.58	0.68	18.5
11	15		72.4	6.5	2.2	2.6		6/13		64	1455	84.0	85.0	85.0	0.77	0.86	0.89	21.0
11	15	180L	144	7.3	2.3	2.5	0.30337	6/13	177	51	730	82.0	82.6	84.0	0.50	0.63	0.70	27.0
18	24.5		118	8.5	2.2	2.4		6/13		69	1460	85.8	86.3	87.0	0.81	0.88	0.90	33.2
17	23	200L	220	4.5	2.0	2.2	0.50227	26/57	255	53	735	84.5	86.5	87.2	0.54	0.67	0.74	38.0
27	37		177	6.0	2.0	2.4		10/22		67	1465	88.0	89.0	89.5	0.85	0.89	0.91	47.8
22	30	225S/M	289	7.5	2.0	2.3	1.22377	9/20	360	56	730	86.5	87.5	88.0	0.65	0.76	0.82	44.0
32	43.5		209	8.5	2.0	2.5		6/13		70	1465	87.5	88.5	89.0	0.89	0.93	0.94	55.2
26	35	225S/M	339	7.5	2.0	2.3	1.36497	7/15	425	56	725	86.2	87.3	88.0	0.67	0.78	0.82	52.0
37	50		242	8.8	2.0	2.3		6/13		70	1450	87.2	88.1	88.7	0.85	0.89	0.91	66.2
33	45	250S/M	433	7.2	1.9	2.2	1.55324	6/13	450	56	730	87.0	88.3	89.0	0.67	0.78	0.82	65.3
47	64		308	9.0	2.2	2.4		6/13		70	1460	87.5	88.4	90.0	0.86	0.90	0.92	81.9
38	52	280S/M	494	5.0	1.8	2.2	3.33245	25/55	650	59	740	87.8	89.5	90.5	0.53	0.63	0.69	87.8
56	76		359	7.0	1.8	2.2		12/26		77	1485	89.5	90.5	91.0	0.83	0.86	0.88	101
46	63	280S/M	602	4.5	1.7	2.0	2.5692	30/66	690	59	735	89.0	90.0	90.2	0.53	0.63	0.70	105
67	91		430	7.0	2.0	2.2		15/33		77	1485	90.5	91.4	91.8	0.84	0.88	0.89	118
56	76	315S/M	726	4.5	1.8	2.0	3.21158	30/66	890	62	735	89.5	90.5	91.0	0.53	0.64	0.70	127
83	113		536	7.0	2.0	2.2		15/33		77	1480	90.5	91.5	92.0	0.84	0.88	0.90	145
78	106	315S/M	1006	7.0	1.8	2.2	5.28596	10/22	990	62	740	88.6	90.6	91.1	0.65	0.76	0.80	154
115	156		738	8.4	2.0	2.3		6/13		77	1485	88.0	90.0	91.2	0.88	0.90	0.92	198

Notes:
**Class "F" insulation with ΔT105K*
Standard voltage, connection and frequency: 220-240V Δ 50Hz 380-415V Δ 50Hz
380-415V Y 50Hz 660-690V Y 50Hz
The values shown are subject to change without prior notice. To obtain guaranteed values please access our website.

Smoke Extraction Motors Aluminium Frame - Two Speed - 400^{0}C/2 hours Improved Efficiency EFF2 - Constant torque VI/IV Pole - Independent Winding

Output		IEC Frame	Full load torque C_n (Nm)	Locked rotor current I_l/I_n	Locked rotor torque T_l/T_n	Break-down torque T_b/T_n	Inertia J kgm^2	Allowable locked rotor time Hot/Cold (s)	Weight (kg)	Sound dB (A)	Rated speed (rpm)	400 V						Full load current I_n (A)
												% of full load						
												Efficiency η			Power Factor (Cos φ)			
kW	HP											50	75	100	50	75	100	
50Hz - 400V - VI/IV pole (1000/1500 rpm) - Y / Y connection																		
0.22	0.3	80	2.19	4.0	2.3	2.8	0.00346	11/24	12	48	960	37.0	46.0	52.0	0.41	0.50	0.56	1.09
0.32	0.43		2.07	5.2	2.1	2.6		6/13		54	1460	48.0	55.0	61.0	0.40	0.51	0.59	1.28
0.26	0.36	80	2.63	3.5	2.1	2.7	0.00346	12/26	12	48	960	37.0	46.0	52.0	0.43	0.52	0.60	1.20
0.4	0.54		2.60	5.0	1.8	2.9		8/18		54	1460	50.0	58.0	62.0	0.49	0.60	0.69	1.35
0.38	0.52	90S	3.77	6.2	2.4	3.3	0.00560	6/13	16	45	970	48.0	58.0	63.7	0.40	0.50	0.59	1.46
0.65	0.88		4.23	6.4	2.0	2.9		5/11		57	1460	61.5	68.0	72.3	0.52	0.64	0.74	1.75
0.55	0.75	90L	5.49	4.0	2.2	2.9	0.00672	12/26	20	45	960	52.0	60.0	65.0	0.41	0.52	0.61	2.00
0.9	1.22		5.95	5.6	2.0	2.8		5/11		57	1440	67.0	72.0	73.0	0.54	0.67	0.77	2.31
0.9	1.22	100L	9.07	4.7	2.2	2.4	0.01121	9/20	21	44	945	59.0	65.0	67.7	0.51	0.62	0.71	2.70
1.3	1.77		8.63	5.8	1.8	2.4		8/18		59	1440	69.5	72.0	72.4	0.61	0.72	0.81	3.20
1.1	1.5	100L	11.2	4.5	2.1	2.3	0.00925	9/20	25	44	940	65.0	69.0	69.2	0.48	0.61	0.74	3.10
1.7	2.3		11.2	6.0	2.0	2.7		5/11		59	1440	73.5	76.5	76.7	0.56	0.70	0.80	4.00
1.5	2	112M	14.5	5.8	2.6	3.0	0.01889	10/22	36	48	970	70.0	74.0	77.0	0.51	0.62	0.69	4.08
2.3	3.1		14.9	6.6	1.8	2.6		5/11		61	1460	73.0	76.0	78.0	0.63	0.75	0.81	5.25
2	2.7	132S	19.3	6.2	2.8	3.2	0.05072	9/20	68	52	985	63.0	70.0	73.0	0.45	0.57	0.66	5.99
3.1	4.2		20.2	7.8	2.2	2.9		12/26		65	1460	82.0	84.0	84.2	0.64	0.75	0.83	6.40
2.8	3.8	132M	27.1	7.9	2.5	2.9	0.06242	9/20	79	52	985	77.0	81.0	82.0	0.48	0.60	0.69	7.14
4.3	5.8		27.8	7.2	2.2	2.5		8/18		65	1465	80.0	81.0	82.0	0.70	0.80	0.85	8.90
4.3	5.8	160M	41.8	5.5	2.0	2.6	0.11565	8/18	96	56	975	79.0	80.0	81.0	0.59	0.74	0.82	9.34
6.6	8.97		42.7	6.9	2.0	3.0		5/11		68	1475	76.0	80.0	82.0	0.60	0.75	0.84	13.8
5.7	7.7	160L	55.5	5.7	2.0	2.6	0.14456	7/15	127	56	975	80.5	81.5	82.6	0.60	0.75	0.83	12.0
8.7	11.8		56.4	6.0	1.9	3.0		6/13		68	1470	79.2	82.5	83.4	0.67	0.80	0.87	17.3
9.5	12.9	180M[1)]	92.5	8.4	2.5	2.9	0.30532	5/11	179	56	980	86.0	86.5	87.0	0.78	0.86	0.87	18.1
14	19		90.8	8.6	2.1	3.0		5/11		71	1470	86.5	87.0	87.2	0.88	0.91	0.92	25.2
11	15	180L	108	6.5	2.0	2.2	0.33308	5/11	200	56	975	84.0	85.0	85.5	0.80	0.86	0.88	21.1
16.5	22.4		107	9.6	2.4	2.9		5/11		71	1470	86.5	87.5	88.0	0.85	0.90	0.93	29.1
16	21.7	200L	155	7.0	2.7	2.8	0.46939	8/18	280	58	985	88.0	89.5	90.0	0.64	0.75	0.81	31.7
24	32.6		155	7.0	2.3	2.6		10/22		74	1475	88.5	90.0	90.0	0.80	0.87	0.89	43.2
21	28.5	225S/M	202	7.0	2.8	3.0	0.77479	7/15	379	61	990	84.0	87.0	88.3	0.55	0.68	0.78	44.0
31	42		198	7.7	2.5	3.3		7/15		76	1490	85.0	87.5	88.5	0.70	0.80	0.86	58.8
25	34	225S/M	241	7.0	2.9	3.2	0.91566	7/15	469	61	990	85.0	87.0	88.0	0.52	0.66	0.74	55.4
37	50		237	8.1	2.4	3.2		7/15		76	1480	90.5	91.0	91.5	0.76	0.85	0.88	66.3
32	43.5	250S/M	309	6.8	2.7	3.4	1.16219	6/13	520	61	990	86.3	88.0	89.0	0.57	0.69	0.77	67.4
47	64		303	8.6	2.6	3.4		7/15		76	1485	90.0	91.5	92.0	0.76	0.85	0.88	83.8
45	60	280S/M	424	7.1	2.9	2.4	2.58594	11/24	685	66	995	87.0	89.0	90.0	0.60	0.70	0.75	96.2
66	90		426	8.5	2.5	3.0		11/24		81	1485	89.0	91.0	92.0	0.72	0.82	0.86	120
54	73	280S/M	518	7.1	3.0	2.5	3.07081	14/31	810	66	990	87.5	90.0	91.0	0.60	0.70	0.75	114
80	109		516	8.4	2.6	3.1		10/22		81	1485	89.5	91.5	92.5	0.75	0.83	0.86	145
60	80	315S/M	568	6.0	2.2	2.2	4.82631	11/24	898	69	990	86.0	89.0	90.0	0.60	0.70	0.75	128
90	125		591	8.0	2.7	2.9		9/20		81	1485	89.0	91.0	91.5	0.71	0.80	0.85	167
62	84	315S/M	596	7.7	3.0	3.3	3.39405	11/24	898	69	990	85.0	88.5	90.0	0.56	0.67	0.72	138
92	126		596	8.5	2.8	2.9		9/20		81	1485	88.0	90.5	91.5	0.80	0.86	0.87	169
75	100	315S/M*	709	7.0	2.9	2.8	3.79811	5/11	1005	69	990	86.0	89.0	90.0	0.60	0.69	0.75	160
110	150		712	6.6	2.2	2.4		5/11		81	1480	89.0	91.0	92.0	0.81	0.86	0.88	196

[1)]For Pad Mounted, please consider frame size 180L.
[2)]Frame size 132M/L is not available for Pad Mounted.
For Pad Mounted version frame sizes up to 250S/M.

Smoke Extraction Motors Aluminium Frame

Mechanical Data

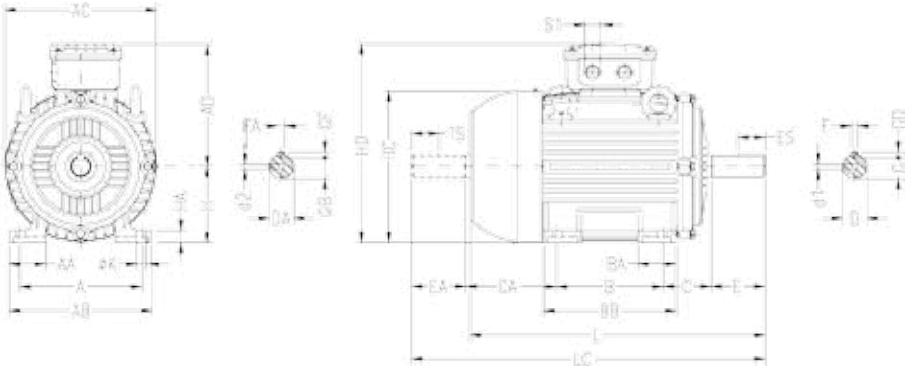

IEC FRAME	A	AA	AB	AC	AD	B	BA	BB	C	CA	SHAFT DIMENSIONS											H	HA	HC	HD	K	L*	L	LC	S1	d1	d2
											D	E	ES	F	G	GD	DA	EA	TS	FA	GB	GE										
80	125	35	149	159	130	100	40	125.5	50	93	19j6	40	28	6	15.5	6	14j6	30	18	5	11	5	80	13	157	210	10	237	276	313	2xM20x1.5	DM6	DM4
90S	140	38	164	179	156	125	42	131	56	104	24j6	50	36	8	20	7	19j6	40	28	5	13	5	90	15	177	240		259	304	350	2xM25x1.5	DM8	DM6
90L								156																			284	329	375			
100L	160	45	188	199	160	140	50	173	63	118	28j6	60	45		24		22j6	50	36	6	18.5	6	100	16	198	260	12	322	376	431	2xM32x1.5	DM10	DM8
112M	190	48	220	232	180			177	70	128							24j6			8	20	7	112	18.5	235	282		335	393	448			
132S	216	51	248	270	207		55	187	89	150	38k6	80	63	10	33	8	28j6	60	45		24		132	20	274	339		393	452	519		DM12	DM10
132M						178		225																			431	490	557			
160M	254	64	308	312	250	210	65	254	108	174	42k6	110	80	12	37		42k6	110	80	12	37	8	160	22	317	410	14.5	530	598	712	2xM40x1.5	DM16	
160L						254		298																				574	642	756			
180M	279	80	350	358	270	241	75	298	121	200	48k6			14	42.5	9	48k6			14	42.5	9	180	28	360	450		586	664	782			
180L						279		332																				624	702	820			
200M	318	82	385	396	294	267	85	370	133	222	55m6			16	49	10							200	30	402	494	18.5	638	729	842	2xM50x1.5	M20	
200L						305																						676	767	880			
225S/M	356	80	436	476	368	286	105	391	149	280	55m6*	110	100				55m6*	110	80	16	49	10	225	34	466	593		718	817	935			
						311				255	60m6						60m6											748	847	995			
250S/M	406	100	506				138	449	168	312	60m6*	140	125	18	53	11	60m6*	140	125	18	53	11	250	42	491	618	24	824	923	1071	2xM63x1.5	M20	
						349				274	65m6				58		60m6																
280S/M	457		557	600	463	368	142	510	190	350	65m6*						60m6*						280		578	743		937	1036	1186			
						419				299	75m6			20	67.5	12	65m6				58												
315S/M	508	182	630	698	590	406	152	558	216	376	65m6*			18	58	11	60m6*				53		315	52	613	807	28	1027	1126	1278			
						457				325	80m6	170	160	22	71	14	65m6				58							1057	1156	1308			
355M/L	610	140	750	810	686	560	200	760	254	458	75m6*	140	125	20	67.5	12	60m6*				53		355	50	725	1035		1248	1396	1561			
						630				388	100m6	210	200	28	90	16	80m6	170	160	22	71	14						1318	1466	1661		M24	M20

IEC FRAME	IEC 60034-22: 200°C		IEC 60034-22: 300°C en 400°C	
	LTB	N.D.E.	LTB	N.D.E.
80	6204-ZZ	6203-ZZ	6204-Z-C3	6203-Z-C3
90S	6205-ZZ	6204-ZZ	6205-Z-C3	6204-Z-C3
90L				
100L	6206-ZZ	6205-ZZ	6206-Z-C3	6205-Z-C3
112M	6307-ZZ	6206-ZZ	6307-Z-C3	6206-Z-C3
132S	6308-ZZ	6207-ZZ	6308-Z-C3	6207-Z-C3
132M				
160M	6309-C3	6209-Z-C3	6309-C3	6209-C3
160L				
180M	6311-C3	6211-Z-C3	6311-C3	6211-C3
180L				
200M	6312-C3	6212-Z-C3	6312-C3	6212-C3
200L				
225S/M	6314-C3		6314-C3	
250S/M				
280S/M	6316-C3		6316-C3	
315S/M	6314-C3		6314-C3	
	6319-C3	6316-C3	6319-C3	6316-C3
355M/L	6316-C3	6314-C3	6316-C3	6314-C3
	NU 322-C3	6319-C3	NU 322-C3	6319-C3

**Shaft dimension for II pole motors, only for direct coupling.*
All dimensions are given in milimeters.
Larger and smaller flanges, on request.
The values shown are subject to change without prior notice.

Smoke Extraction Motors Aluminium Frame

Mechanical Data

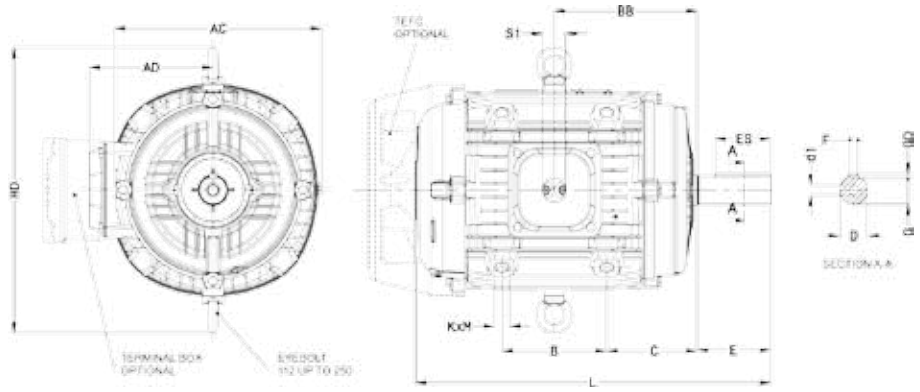

IEC FRAME	AC	AD	B	BB	C	SHAFT DIMENSIONS						H	HC	HD	L	d1	S1		KxM
						ID	E	ES	F	G	GD								
80	196	100	80	100	60	19j6	40	28	6	15.5	6	85	170		238	DM6	M20x1.5	NPT1/2"	M12x1.75x18
90S	174	110	65	106	73.5	24j6	50	36	8	20	7	95	190	-	258	DM8		NPT3/4"	
90L			90	118.5											283				
100L	196	122	100	133	83	28j6	60	45		24		105	210		322	DM10	M25x1.5	NPT1"	
112M	222	137	100	140	90							117	234	316	336				
132S	260	165	125	159	96.5	38k6	80	63	10	33	8	145	290	354	393	DM12			M16x2x24
132M			140	178	108										430				
160M	300	185	156	213	135	42k6	110	80	12	37		161	322	410	530	DM16	M32x1.5	NPT1.1/4"	M20x2.5x30
160L			200	235											574				
180L	345	205		260.5	160.5	48k6			14	42.5	9	184.5	369	459	624			NPT1.1/2"	
200M	380	218	186	270.5	173.5	55m6			16	49	10	215.5	431	610	638	DM20	M40X1.5	NPT2"	M24x3x45
200L			224	289.5											676				
225S/M	476	274	224	309	192.5	55m6	140	100	18	53	11	255	510	624	748		M50X1.5	NPT3"	
						60m6		125											
250S/M				340	230.5	60m6									824		M63X1.5		
						65m6				58									

IEC FRAME	BEARINGS 200°C		BEARINGS 300°C et 400°C	
	D.E.	N.D.E.	D.E.	N.D.E.
80	6204-ZZ	6203-ZZ	6204-Z-C3	6203-Z-C3
90S	6205-ZZ	6204-ZZ	6205-Z-C3	6204-Z-C3
90L				
100L	6206-ZZ	6205-ZZ	6206-Z-C3	6205-Z-C3
112M	6307-ZZ	6206-ZZ	6307-Z-C3	6206-Z-C3
132S	6308-ZZ	6207-ZZ	6308-Z-C3	6207-Z-C3
132M				
160M	6309-C3	6209-Z-C3	6309-C3	6209-C3
160L				
180L	6311-C3	6211-Z-C3	6311-C3	6211-C3
200M	6312-C3	6212-Z-C3	6312-C3	6212-C3
200L				
225S/M	6314-C3	6314-C3	6314-C3	6314-C3
250S/M	6314-C3	6314-C3	6314-C3	6314-C3

"FF" Flange

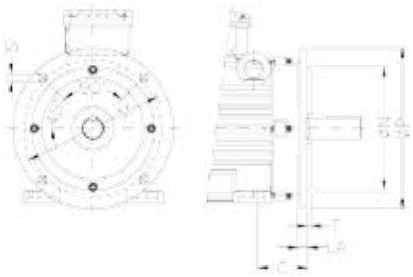

IEC FRAME	"FF" FLANGE									Nº OF HOLES
	FLANGE	C	LA	M	N	P	T	S	α	
80	FF-165	50	10	165	130	200	3.5	12	45°	4
90S/L		56								
100L	FF-215	63	11	215	180	250	4	15		
112M		70								
132S/M	FF-265	89	12	265	230	300				
160M/L	FF-300	108	18	300	250	350	5	19		
180M/L		121								
200M/L	FF-350	133		350	300	400				
225S/M	FF-400	149		400	350	450			22°30'	8
250S/M	FF-500	168		500	450	550				
280S/M		190								
315S/M	FF-600	216	22	600	550	660	6	24		
355M/L	FF-740	254		740	680	800				

"C" Din Flange

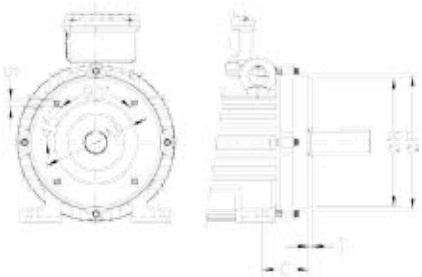

IEC FRAME	"C" DIN FLANGE							Nº OF HOLES
	FLANGE	C	M	N	P	S	T	
80	C-120	50	100	80	120	M6	3	4
90S/L	C-140	56	115	95	140	M8		
100L	C-160	63	130	110	160		3.5	
112M		70						
132S/M	C-200	89	165	130	200	M10		

** II Pole*
All dimensions are givem in milimeters.
The values shown are subject to change without prior notice.

Low Voltage
Hazardous Area Motors

1 EXPLOSIVE ATMOSPHERE

An atmosphere is considered as explosive when the amount of gas, vapor, dust or fibers is such that a spark originated from an electric circuit or an overheating from an equipment may cause an explosion.
In reference to surrounding equipment, preventive construction measures are taken so as to avoid that the area around them is flamed.

2 EUROPEAN STANDARDS FOR EXPLOSIVE ATMOSPHERE DESIGNED MOTORS

In Europe, all motors designed for explosive atmospheres must meet IEC and CENELEC Standards and ATEX Directive 94/9/EC, which is mandatory since July 2003.

2.1 IEC STANDARDS

The IEC Standard classifies the risk areas into zones and groups:
- The zones are classified according to frequency and period of time that the explosive atmosphere is present.
- The division into groups is based on the aggressiveness of the environment.

Zone classification:

Gases and Vapours	Zone 0	Environment where the explosive atmosphere is present continuously or for long periods of time.
	Zone 1	Environment where the probability of existing an explosive atmosphere is associated with normal operation of the equipment.
	Zone 2	Environment where an explosive atmosphere will probably not be present under normal operating conditions and, if any, this will be for short periods of time.

Dusts	Zone 20	Environment where flammable dust is present continuously or frequently under normal operating conditions in enough amount to generate an explosive concentration of mixed dust with air and/or areas where may occur excessive amount of dust with no further control.
	Zone 21	Area that is not classified as Zone 20. However, where flammable dusts may occur under normal operating conditions in enough amount to generate an explosive concentration of dust mixed with the air.
	Zone 22	Areas that are not classified as Zone 21. However, where flammable dust may occur frequently and is present for short periods of time, or where the amount of dust may occur just under abnormal operating conditions causing an explosive mixture.

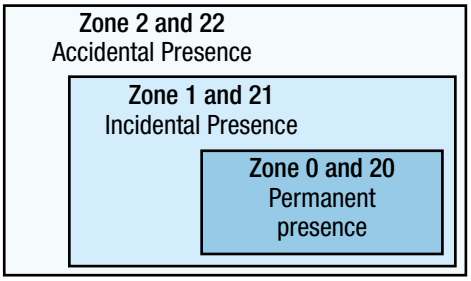

Group classification:

GROUPS	Mines	Equipment manufactured for underground operation mines	I	Methane may be present (grisu)
	Other Explosive Atmospheres	Equipment manufactured for other types of industry (surface industry), being subdivided based on the characteristics of the materials present	IIA	acetone, ammonia, benzene, butane, butanol, alcohol butylic, ethane, ethanol, ethyl acetate, gasoline, hepthanes, hexanes, natural gas, methanol, naphtha, propane, propanol, toluene, esthirene, solvents in general
			IIB	acetaldeide, cyclopropane, diethylic ether, ethene, carbon monoxide
			IIC	acetylene, butadiene, ethene oxide, hydrogen, propylene oxide, gases containing over 30% of hydrogen

2.2 CENELEC STANDARDS

CENELEC Standard provides criteria to determine the classification of the equipment into groups and categories:

Group classification:

GROUP I (Mines)	
Categories	
M1	Equipment designed to operate in environments where the explosive atmosphere is frequently present.
M2	Equipment that must be powered off if there is any risk of explosion. Explosive atmosphere is frequently present.

GROUP II* (Surface Industry)			
Categories			Zone
1	Equipment with high level of protection. Explosive atmosphere is present continuously or for long periods of time	1G (gas) 1D (dust)	0 (gas) 20 (dust)
2	Equipment with high level of protection. Explosive atmosphere may occur occasionally.	2G (gas) 2D (dust)	1 (gas) 21 (dust)
3	Equipment with normal level of protection. The explosive atmosphere will probably not occur.	3G (gas) 3D (dust)	2 (gas) 22 (dust)

** Gases are subdivided into IIA, IIB and IIC, as per IEC Standards.*

2.3 ATEX DIRECTIVE 94/9/EC

Valid since March of 1996, this European Directive is mandatory since July 2003. If provides a classification for motors into areas containing explosive atmospheres. More than product specification, the present Directive gives special attention to the production process including design, production itself and sale.
The certification for the system is provided together with the product certification. ATEX Directive 94/9/EC also classifies the equipment to operate in explosive atmospheres into groups and categories following the same classification bases used by CENELEC.

3 CLASSES OF TEMPERATURE

The minimum temperature causing an explosion of a gas, vapour of explosive mixture is called ignition temperature. To avoid any risk of explosion, the motor surface temperature must always stay below the ignition temperature of the explosive mixture.
The internal and external temperature of the electrical equipment must be strictly checked to avoid ignition of an explosive mixture. So the equipment is classified into classes of temperature, as per table below:

Class of Temperature (ºC) GGROUP II* (Surface Industry) IEC / CENELEC	Maximum motor surface temperature (ºC)	Ignition temperature of the explosive mixture (ºC)
T1	450	>450
T2	300	>300
T3	200	>200
T4	135	>135
T5	100	>100
T6	85	>85

4 MOTORS FED BY VARIABLE FREQUENCY DRIVES

Notes: Ex e motor line fed by VFD requires additional certification.

4.1.1 Temperature class

Ex d and Ex de motor line fed by VFD are suitable to operate at temperature class T4.
Note: For Ex nA motor line, please considerer page 23

4.1.2 Application of filters

- Motors with voltages up to 575V do not require application of filters if the criteria below are followed accordingly:

Rated Voltage	Insulation System	TECHNICAL CRITERIA FOR VFD APPLICATION			
		Voltage Spikes motor terminals (maximum)	dV/dt inverter terminals (maximum)	Rise Time(*) inverter terminals (minimum)	MTBP(*) Minimum Time Between Pulse
Vrated ≤ 460V	Standard Insulation	≤ 1430V	≤ 5200 V/µs	≥ 0,1 µs	≥ 6 µs
460V < Vrated ≤ 575V	Reinforced Insulation	≤ 1780V	≤ 6500 V/µs		

(*) Informed by the converter manufacturer.

Note: Nameplate showing voltage 380-415V / 660-690V – 50Hz and 440-480V – 60Hz, and fed by VFD on voltage

660-690V – 50Hz or 480V – 60Hz require filters.

- Motors fed by VFD with voltage range of 575V up to 690V require filters.

4.1.3 Switching Frequency

The minimum switching frequency is 2.5 kHz.

4.1.4 Type of load torque

For load with quadratic torque, motor can be operated at frequency range from 10% up to 100% of the rated frequency if the load torque at the rated frequency is 95% of the motor rated torque.
For load with constant torque, motor can be worked at frequency range of 10% up to 100% of the rated frequency if the load torque is lower than motor torque derating curve as showing below.
To operate at frequency above the rated frequency, use the derating curve and check if breakdown torque is appropriate for the application in the maximum run speed.

Note: For maximum motor speed selection, item 4.2.1. showing mechanical speed limits must be considered.

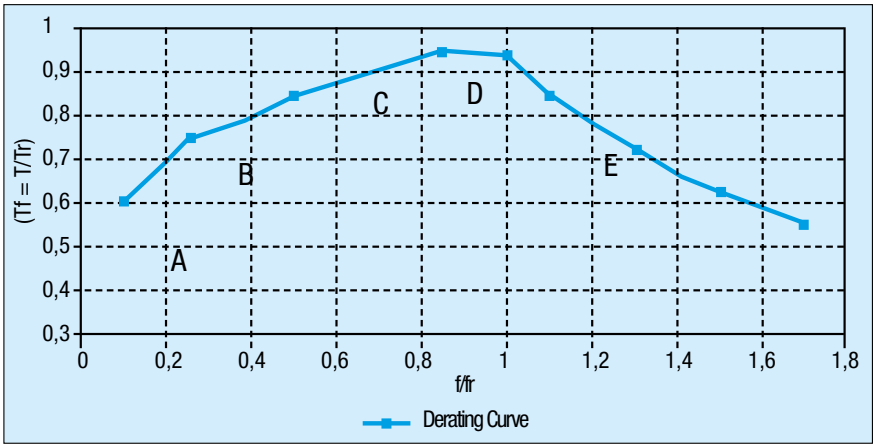

PART	DERATING CURVE	
	FREQUENCY RANGE	DERATING
A	0.1 ≤ f/fr < 0.25	Tf = (f/fr) + 0.50
B	0.25 ≤ f/fr < 0.50	Tf = 0.4(f/fr) + 0.65
C	0.50 ≤ f/fr < 0.83	Tf = 0.3(f/fr) + 0.70
D	0.83 ≤ f/fr ≤1.0	Tf = 0.95
E	f/fr > 1.0	Tf = 0.95 / (f/fr)

4.2 Mechanical Characteristics

4.2.1 Mechanical Limit Speed:

The mechanical limit speeds of the motor are indicated on the table below:

MOTOR	SPEED (RPM)			
	2 pole	4 pole	6 pole	8 pole
90 – 100	7000	7000	7000	7000
112	7000	6000	6000	6000
132	6000	5500	5500	5500
160	5000	5000	5000	5000
180	4500	4000	4000	4000
200	4000	3800	3800	3800
225	3600	3600	3600	3600
250	3600	3600	3600	3600
280	3600	3000	3000	3000
315	3600	2500	2500	2500
355	3600	1800	1800	1800

Note: For maximum motor speed selection, the derating curve of item 4.1.4 must be considered.

For other applications, please contact WEG.

4.2.2 Bearing insulation

For “Ex d” and “Ex de” motors, on frames 315S/M and 355M/L* when used with VFD’s must use insulated bearings.

(*) Other frame sizes, on request.

5 PROTECTION CATEGORIES FOR ELECTRIC MOTORS

5.1 TYPE Ex d – EXPLOSION PROOF

It is a type of protection where the parts that may ignite an explosive atmosphere are closed into enclosures which are capable to withstand a pressure during an internal explosion of an explosive mixture and to avoid that explosion leaves this enclosure and reaches an external explosive atmosphere.
An induction electric motor (of any protection) is not totally sealed, that is, air goes in and out. While in operation, it becomes heated up and the internal air gets to a higher pressure compared to the external pressure (air is blown out): when motor is switched - off, the internal pressure decreases, allowing in this way entrance of air (which in this case is contaminated).
The motor surfaces do not need to be totally enclosed to avoid flame propagation. The minimum opening required to avoid passage of flames depends on the gas or vapour that is present.
Therefore, there will always be flame passages on the motor. The safety level on an explosion proof motor is on the fact that it must ensure that all flame passages never exceed the standardized dimensions that the motor is physically suitable to withstand an internal explosion without transmitting to the external environment.
Ex d protection will not allow that an internal explosion propagates to the external environment. To ensure safety to the system, WEG provides a control of the openings and the finishing of joints once these are responsible for the volume of gases exchanged between inside and outside of the motor.

The main characteristics of Ex d motors are as follows:

- Reinforced frame, terminal box and endbells
- Greater contact surface between motor components
- Reduced clearance between motor shaft and bearing cap to avoid transmission of sparks and the external environment
- Water pressure test on all components (frames, endbells, terminal box, terminal box covers)

Application:
Environments containing flammable gases or vapour continuously, intermittently or periodically in enough amount to generate explosive or flammable mixtures arising out of repairs or maintenance services.
The most common locations of Zone 1 and 2, group IIA and IIB are those where the following gases are found present: oil, naphtha, benzene, ammonia, propane, diethylic ether, acetone, alcohol, industrial methane, natural gas.
The main applications include fans, blowers, crushers, conveyor systems, mills, cranes and other applications located in areas that require explosion proof motors.

5.2 TYPE Ex de – EXPLOSION PROOF WITH INCREASED SAFETY TERMINAL BOX

Ex de motors differ from Ex d motors only on the configuration of terminals and terminal box. The terminal box with increased safety terminal block prevents from any ignition source that may occur such as sparks, excessive heating, etc.

The main characteristics of Ex de motors are:

- Terminal box components as well as connection cables must be firmly fastened (without allowing any movement)
- Special terminal block to avoid arcs and sparks and standardized distance between terminals (increased safety terminal block)
- Double grounding must be provided (one on the foot and the other on terminal box covers)

Application:
Same as described for Ex d motors.

5.3 TYPE Ex e – INCREASED SAFETY

This is an electric equipment which under normal operating conditions will not cause arcs, sparks or overheating enough to cause ignition of an explosive atmosphere which it has been designed to. These motors are similar to standard motors.

However, they are fitted with special features as follows:

- Temperature rise 10K below the maximum temperature allowed for the insulation class
- Commitment with “time tE” (maximum time for switching off through protection device)
- Terminal box components as well as connection cables must be firmly fastened (without allowing any movement)
- External grounding on the frame is mandatory
- Frame grounding must be connected with terminal box grounding
- Drip cover must be applied on vertical applications
- Reduced output x frame ratio
- Special care when manufacturing the winding along with applying double impregnation layer (frames 63 up to 200)
- For frames 225S/M and above resin continuous flow impregnation
- Special terminal block to avoid arcs and sparks and standardized distance between terminals (increased safety terminal block)
- Drain holes on endbells

5.3.1 TIME tE

It is the time required for the motor winding, when starting current goes through it, to reach the limit temperature, starting from the achieved temperature under normal service duty and considering the ambient temperature on its maximum value.
The protection device must be designed so as to avoid any risk under all operating conditions. This protection device must operate, without fault, not only on overload cases, but also on locked rotor conditions. On this way, the value of time tE must be such that, when rotor is locked, motor must be switched off by a protection device that depends on the current, before time tE gets to the end.

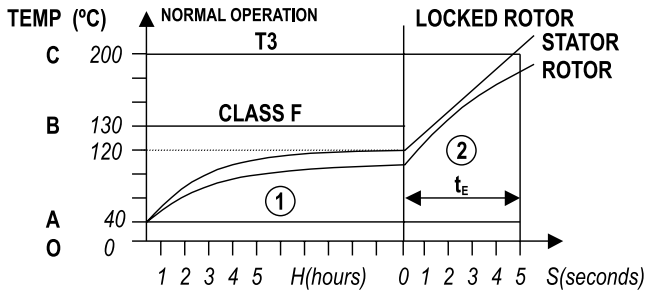

On the chart above, the interval OA represents the maximum ambient temperature, and OB is the temperature reached under normal operating duty. In case there is any failure with further rotor locking, the condition is represented on the interval 2 of the chart. The motor temperature increases fastly up to interval OC which must be shorter than motor classification temperature T. So, care must be taken to ensure motor is switched-off within time tE.

Application:

Environments where the probability of existing an explosive atmosphere is associated with normal operation of the equipment in amount enough to cause an explosion.
The environments are classified as Zone 1 and 2, groups IIA, IIB and IIC. The most common gases included in this classification are: acetone, ammonia, benzene, butane, butanol, buthylic alcohol, ethane, ethanol, acetate of ethyl, gasoline, heptanes, hexanes, natural gas, methanol, oil naphtha, propane, propanol, toluene, esthirene, solvents in general, acetaldehyde, cyclopropane, diethylic ether, ethane, carbon monoxide, acetylene, butadiene, ethane oxide, hydrogen, propylene oxide and gases containing over 30% of hydrogen.

5.4 TYPE Ex n – NON-SPARKING

This type of protection is applied to electric equipment which do not cause ignition of an explosive atmosphere under normal operating conditions.

The Ex n motor is built identically to a normal TEFC motor, with the following characteristics:

- Terminal box components as well as connection cables must be firmly fastened (without allowing any movement)
- Increased safety terminal block to avoid arcs and sparks, along with standardized distance between terminals

Application:
Environment where an explosive atmosphere will probably not be present under normal operating conditions and, if any, this will be for short periods of time, that is, an explosive atmosphere may be present accidentally.
The environments are classified as Zone 2, groups IIA, IIB and IIC. The most common gases included in this classification are: acetone, ammonia, benzene, butane, butanol, buthylic alcohol, ethane, ethanol, acetane of ethyl, gasoline, heptanes, hexanes, natural gas, methanol, oil naphtha, propane, propanol, toluene, esthyrene, solvents in general, acetaldehyde, cyclopropane, diethylic ether, ethane, monoxide of carbon, acetylene, butadiene, oxide of ethane, hydrogen, oxide of propylene and gases containing over 30% of hydrogen.

5.5 Cast Iron Motor for Zone 21

These motors are designed to avoid that sparks, arcs or external superficial heat produced, cause the ignition of the dust (cloud or layer). WEG Zone 21 motors are standard motors with special degree of protection that not allow the ingress of dust.

The main characteristics of a Cast Iron Motor for Zone 21 are:

- Degree of protection: IP6X
- Temperature classification: Zone 21: maximum motor guarantee external surface Temperature T125°C – Temperature limitation because of the presence of dust clouds (for materials with ignition temperature above 125°C) and presence of dust layers (up to 5mm).

Application:
These motors are designed to operate in areas that can release flammable dust or in atmospheres where explosions can occur due to a mixture of air and dust. The main applications include sugar refining plants, breweries, cement works, textiles and pharmaceutical, chemical and agricultural process industries.

6 GENERAL INFORMATION

Type of Protection	Ex d	Ex de	Ex e	Ex n	Cast Iron for Zone 21
Designation	Explosion Proof	Explosion Proof with Increased Safety Terminal Box	Increased Safety	Non-sparking	DIP
Objective	Keep an internal explosion not allowing to propagate to the external environment	Explosion not allowing to propagate to the external environment, with special attention to terminal box	Ensure non occurrence of arcs, sparks or overheating under normal operationor on starting	Ensure non occurrence of arcs, sparks or overheating under normal operation	Avoid that sparks, arcs or external superficial heat produced, cause the ignition of the dust
Time t_E	Not applied	Not applied	Applied	Not applied	Not applied
Construction	Rugged frame	Rugged frame, with special characteristics on the terminal box	Similar to standard motor, with special characteristics on the terminal box	Similar to standard motor, with special characteristics on the terminal box	Similar to standard motors, with degree of protection IP 66
Output/frame ratio	Standard	Standard	Reduced	Standard	Standard

Terminal box	Explosion Proof	Explosion proof with increased safety terminal block	Increased safety terminal block	Increased safety terminal block	

7 WEG MOTORS NAMEPLATE IDENTIFICATION

- Type EEx d – Explosion Proof / Explosion Proof with Brake

CE 0102 Ex II 2 G Ex d II B T4 CESI 01 ATEX XXXX

- Type EEx de – Explosion Proof with Increased Safety Terminal Box

CE 0102 Ex II 2 G Ex de II B T4 CESI 01 ATEX XXXX

- Type EEx e – Increased Safety

CE 0102 Ex II 2 G Ex e II C T1,T2,T3 PTB 01 ATEX XXXX

- Type EEx nA – Non Sparking

CE 0102 Ex II 3 G Ex nA II T3 / CE 0102 Ex II 3 D T 125°C

- Cast Iron for Zone 21

CE 0102 Ex II 2 D tD A21 IP 6X T 125°C

Caption:
Identification code of the notified body
Group for the equipment
Category for the equipment
G - Gas / D - Dust
Type of protection against explosion
Protection by enclosure
A21 Level of protection
Group of the equipment
Gas subdivision
Class of Temperature
Certifying Entity
Year
ATEX directive
Certificate Number

For Ex nA motors, the letter A means that all motor components are non-sparking.

Ex d / Ex de - Explosion Proof Motors
Cast Iron Frame
Improved Efficiency EFF2

Standard Features:

- Three-phase, multivoltage, IP55, TEFC
- Output: 0.55 up to 315kW
- Frames: 90 up to 355M/L
- Voltage: 220-240/380-415V (up to 100L)
  380-415/660V (from 112M and up)
- Class “F” insulation (ΔT=80K)
- Continuous duty: S1
- Design N
- Ambient temperature: 40°C, at 1000 m.a.s.l.
- Squirrel cage rotor/Aluminium die cast
- Stainless steel nameplate AISI 316
- Dimensions according to IEC-72
- Performance characteristics according to IEC 34
- Regreasing nipple from frame 225S/M and above
- Metric threaded cable entries on the terminal box
- Thermistors (1 per phase) fitted in frame 160M and above
- Suitable for inverter duty applications
- Color: RAL 5010

Options Available:

- Degree of Protection: IP56, IP65 or IP66 (W)
- Bearing seals:
  - Lip seal
  - Oil seal
  - Labyrinth taconite seal and W3seal for frames 90S and above
- Thermal protection:
  - Thermistors: frame 132M and below
  - Thermostats
  - RTD-PT 100
- Space heaters
- Design H
- Class “H” insulation
- Roller bearings for frame 160M and above

More options available, on request

Typical Applications:

- Pumps
- Fans
- Crushers
- Conveyor belts
- Mills
- Centrifugal machines
- Presses
- Elevators
- Packaging equipment
- Grinders and others.

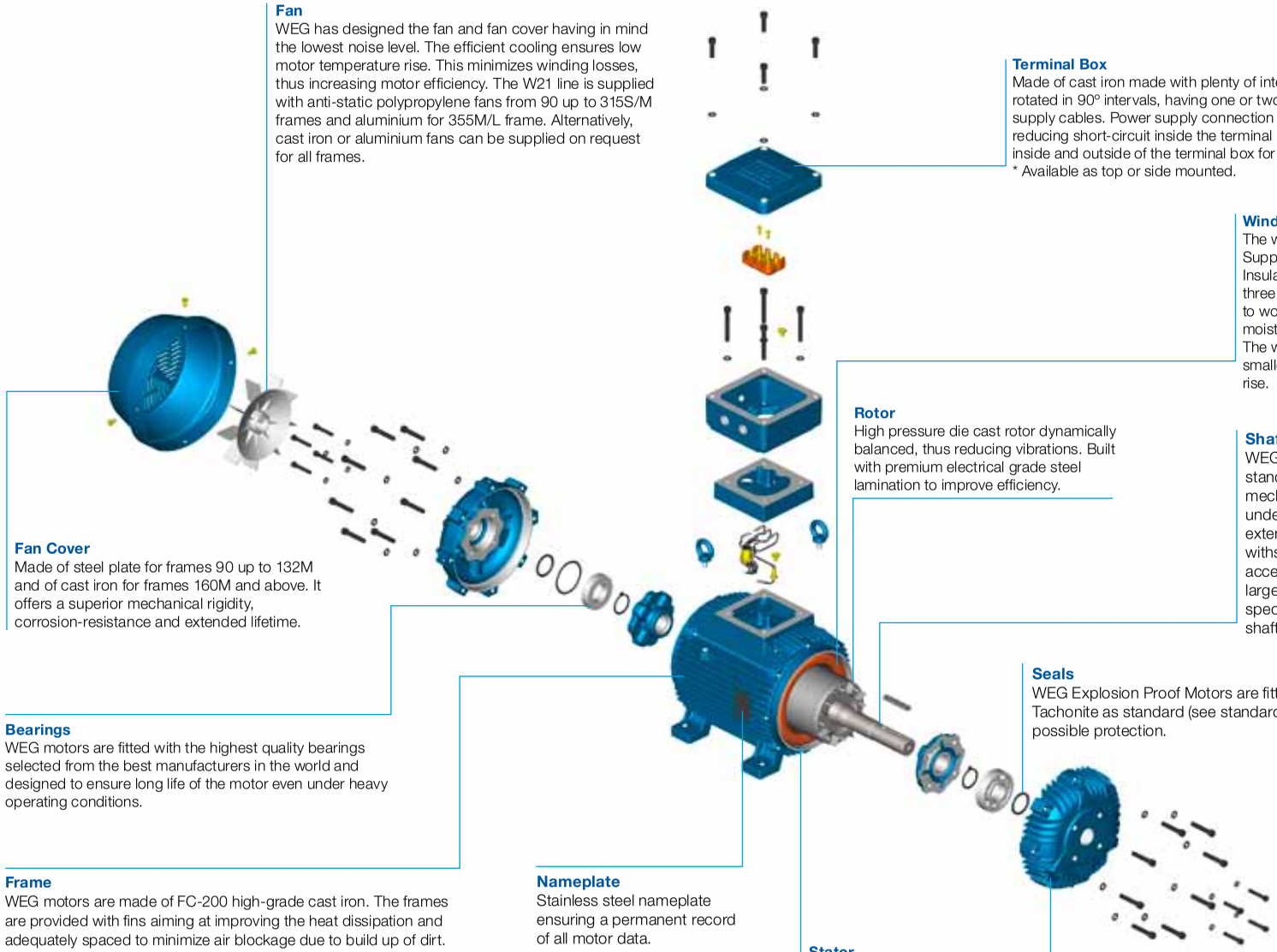

Fan
WEG has designed the fan and fan cover having in mind the lowest noise level. The efficient cooling ensures low motor temperature rise. This minimizes winding losses, thus increasing motor efficiency. The W21 line is supplied with anti-static polypropylene fans from 90 up to 315S/M frames and aluminium for 355M/L frame. Alternatively, cast iron or aluminium fans can be supplied on request for all frames.

Terminal Box
Made of cast iron made with plenty of internal space. The terminal box can be rotated in 90° intervals, having one or two threaded holes to connect the power supply cables. Power supply connection components are certified, then reducing short-circuit inside the terminal box. The grounding system is placed inside and outside of the terminal box for improved safety.
* Available as top or side mounted.

Winding
The wire is enameled with class H. Supplied with patented WISE (WEG Insulation System Evolution), which allows three times longer motor lifetime designed to work in environments with excess of moisture and suitable for VFD application. The winding is designed to obtain the smallest Joule losses and temperature rise.

Rotor
High pressure die cast rotor dynamically balanced, thus reducing vibrations. Built with premium electrical grade steel lamination to improve efficiency.

Shaft
WEG uses SAE/AISI 1040/45 steel as standard, which provides high mechanical strength, preventing bending under load and minimizes fatigue which extends lifetime. Specially designed to withstand torques caused during motor acceleration and deceleration. It's size is larger than the standard motor and, upon special design, motor can have second shaft end.

Fan Cover
Made of steel plate for frames 90 up to 132M and of cast iron for frames 160M and above. It offers a superior mechanical rigidity, corrosion-resistance and extended lifetime.

Seals
WEG Explosion Proof Motors are fitted with either Lip seal or Labyrinth Tachonite as standard (see standard features list) to provide the best possible protection.

Bearings
WEG motors are fitted with the highest quality bearings selected from the best manufacturers in the world and designed to ensure long life of the motor even under heavy operating conditions.

Frame
WEG motors are made of FC-200 high-grade cast iron. The frames are provided with fins aiming at improving the heat dissipation and adequately spaced to minimize air blockage due to build up of dirt. Motor designed to ensure that surface temperature is lower than ignition temperature of the gas that is present in the environment. Mechanical components are designed towithstand an explosion inside the motor without causing any risk to outside areas since there is no flame flame propagation through flame path. The motors can be mounted in any position, horizontal and vertical, withstanding the maximum axial and radial thrusts.

Nameplate
Stainless steel nameplate ensuring a permanent record of all motor data.

Stator
Built with premium electrical grade steel lamination to reduce electrical losses and operating temperature.

Endshields
Made of cast iron, they are provided with external fins for better temperature dissipation, thus increasing bearing life.

Ex d / Ex de - Explosion Proof Motors - Cast Iron Frame
Improved Efficiency EFF2

Output		IEC Frame	Full load torque C_n (Nm)	Locked rotor current I_l/I_n	Locked rotor torque T_l/T_n	Break-down torque T_b/T_n	Inertia J kgm²	Allowable locked rotor time Hot/Cold (s)	Weight (kg)	Sound dB (A)	Rated speed (rpm)	400 V						Full load current I_n (A)
												% of full load						
												Efficiency η			Power Factor (Cos φ)			
kW	HP											50	75	100	50	75	100	
II Pole - 3000 rpm																		
0.75	1	90S	2.44	7	2.8	3.3	0.00181	25/55	31.7	64	2880	72	76.1	78.2	0.69	0.79	0.84	1.65
1.1	1.5	90S	3.67	7.2	2.9	2.9	0.00181	15/33	31.7	64	2870	76	79	80	0.71	0.81	0.87	2.28
1.5	2	90S	4.95	6.5	2.4	2.8	0.00181	12/26	31.7	64	2840	79.6	82	82.2	0.72	0.81	0.87	3.03
2.2	3	90L	7.42	6.6	2.8	3	0.00242	9/20	33.7	64	2840	82.2	83.7	83.4	0.69	0.8	0.85	4.48
3	4	100L	9.76	7.2	2.6	2.8	0.00616	9/20	45.5	67	2880	83.2	85.7	85.6	0.77	0.85	0.88	5.75
4	5.5	112M	13.37	7.6	2.7	3.1	0.00842	15/33	59.9	64	2890	85	87.5	87.5	0.76	0.84	0.88	7.5
5.5	7.5	132S	17.95	8	2.7	3.2	0.02056	18/40	85.3	68	2935	84	87.1	88.3	0.73	0.82	0.87	10.3
7.5	10	132S	24.05	7.3	2.4	2.9	0.02056	10/22	85.4	68	2920	86	87.5	88	0.76	0.84	0.88	14
11	15	160M	35.78	8.3	2.6	3.1	0.04706	12/26	144.8	70	2945	87.8	90.1	90.3	0.77	0.85	0.88	20
15	20	160M	47.7	7.8	2.5	3.2	0.05295	10/22	151.6	70	2945	89.6	91.1	91.2	0.76	0.84	0.88	27
18.5	25	160L	59.63	8.2	2.6	3.3	0.06471	10/22	168.9	70	2945	90.4	91.9	91.7	0.75	0.84	0.88	33.1
22	30	180M	71.43	8.2	2.8	3.1	0.11351	13/29	218.5	70	2950	90.5	92	92.1	0.78	0.86	0.89	38.7
30	40	200L	94.76	7.5	2.8	2.8	0.2063	19/42	289.6	74	2965	90	92	92.7	0.77	0.85	0.88	53.1
37	50	200L	118.45	7.6	2.9	2.9	0.22424	19/42	305	74	2965	91.3	92.8	93	0.75	0.84	0.88	65.3
45	60	225S/M	142.14	7.9	2.6	3.5	0.44846	24/53	460.3	82	2965	91.6	93.3	93.6	0.85	0.89	0.91	76.3
55	75	250S/M	177.67	8.5	2.8	3	0.50227	15/33	513.9	82	2965	91.8	93.5	93.8	0.84	0.89	0.91	93
75	100	280S/M	236.1	7.5	2.4	2.8	1.08256	44/97	782.9	83	2975	91.4	93.6	94.2	0.81	0.87	0.89	129
90	125	280S/M	295.12	8.1	2.3	2.8	1.27083	35/77	845.4	83	2975	92	94.1	94.5	0.79	0.87	0.9	153
110	150	315S/M	354.15	7.6	2.3	2.8	1.41204	40/88	972.8	84	2975	93	94.4	94.9	0.79	0.85	0.89	188
132	175	315S/M	413.87	7.5	2.3	2.8	1.64738	31/68	1034.3	84	2970	93.2	94.8	95	0.82	0.88	0.9	223
160	220	315S/M	520.29	7.3	2.2	2.5	2.11806	25/55	1164.6	84	2970	94.1	95	95.4	0.85	0.89	0.9	269
200	270	355M/L	635.33	7.2	1.8	2.6	4.82631	70/154	1830	81	2985	93.5	95	95.4	0.89	0.91	0.92	329
250	340	355M/L	800.05	7.8	2.2	2.5	5.74561	65/143	1972	81	2985	94.4	95.8	96	0.88	0.91	0.92	409
HIGH-OUTPUT DESIGN																		
75	100	250S/M	236.9	8.3	3	3.4	0.55609	10/22	570	82	2965	92.5	93.6	93.6	0.83	0.88	0.9	129
110	150	280S/M	354.15	7.6	2.3	2.8	1.41204	40/88	878	83	2975	93	94.4	94.9	0.79	0.85	0.89	188
IV Pole - 1500 rpm																		
0.55	0.75	90S	3.7	6.4	2.7	2.8	0.00392	17/37	31.6	49	1425	69	73	75	0.6	0.72	0.78	1.36
0.75	1	90S	4.91	6.5	2.7	2.8	0.00392	14/31	31.7	49	1430	71	74.4	74.4	0.58	0.71	0.79	1.84
1.1	1.5	90S	7.53	5.5	2.4	2.5	0.00392	9/20	31.8	49	1400	72.5	76.2	76.2	0.61	0.75	0.82	2.54
1.5	2	90L	9.96	6.4	2.7	2.5	0.0056	9/20	34.6	49	1410	75	78.6	78.6	0.63	0.75	0.82	3.36
2.2	3	100L	14.84	6.7	2.7	2.9	0.00842	14/31	45.1	53	1420	81	82.3	83	0.65	0.78	0.83	4.61
3	4	100L	20	6.7	2.5	2.6	0.00918	8/18	46.6	53	1405	81.5	82.6	82.6	0.68	0.78	0.84	6.24
4	5.5	112M	27.02	6.9	2.6	2.8	0.01607	10/22	62.3	56	1430	83	84.3	84.2	0.67	0.78	0.84	8.16
5.5	7.5	132S	35.96	8	2.4	3	0.04264	10/22	83.6	60	1465	85.2	87.5	88	0.65	0.78	0.84	10.7
7.5	10	132M	47.95	8	2.5	2.8	0.05427	8/18	95.1	60	1465	86.4	88.4	88.6	0.7	0.8	0.86	14.2
11	15	160M	72.41	6	2.3	2.5	0.08029	16/35	142.8	67	1455	87.6	89.4	89.9	0.7	0.79	0.84	21
15	20	160L	96.55	6	2.3	2.4	0.10539	13/29	162.7	67	1455	89	90.4	90.6	0.69	0.79	0.84	28.4
18.5	25	180M	119.46	7	2.7	2.8	0.17939	18/40	212.4	64	1470	89.8	91.5	92.1	0.68	0.79	0.84	34.5
22	30	180L	143.35	7.5	2.8	2.8	0.21528	14/31	229.9	64	1470	91	92.2	92.4	0.67	0.78	0.83	41.4
30	40	200L	190.48	6.5	2.2	2.5	0.33095	17/37	289.7	69	1475	91.8	93	93	0.75	0.82	0.85	54.8
37	50	225S/M	237.3	7.2	2.3	2.7	0.62988	20/44	404.6	70	1480	91.2	92.2	92.8	0.76	0.85	0.88	65.4
45	60	225S/M	285.72	7	2.3	2.7	0.76985	16/35	433.8	70	1475	91	92.9	93.5	0.76	0.85	0.88	78.9
55	75	250S/M	357.15	7	2.3	2.6	0.97981	16/35	508.8	70	1475	93	93.5	93.7	0.78	0.86	0.89	95.2
75	100	280S/M	472.99	6.7	2.1	2.4	1.84681	31/68	777.5	76	1485	92	93.6	94	0.79	0.85	0.88	131
90	125	280S/M	591.24	7.1	2.4	2.5	2.56947	31/68	869	76	1485	92.3	93.9	94.2	0.8	0.86	0.88	157
110	150	315S/M	709.49	7.1	2.3	2.6	2.81036	27/59	1036.1	77	1485	92.8	94.4	94.4	0.78	0.85	0.88	191
132	175	315S/M	827.74	7.5	2.3	2.6	3.37243	13/29	1121.1	77	1485	93	94	94.6	0.78	0.85	0.88	229
160	220	315S/M	1044.1	7	2.4	2.7	3.77391	22/48	1189.9	77	1480	93.3	95.1	95.5	0.75	0.83	0.87	278
200	270	355M/L	1272.8	6.6	2.3	2.2	6.34151	44/97	1808.1	79	1490	94.8	95.2	95.4	0.78	0.85	0.87	348
250	340	355M/L	1602.78	6.9	2.2	2.5	7.57882	36/79	1921.6	79	1490	94.3	95.2	95.8	0.8	0.86	0.88	428
280	380	355M/L	1791.35	7.1	2.2	2.4	9.0224	39/86	1770	79	1490	95	95.7	95.8	0.81	0.87	0.88	479
315	430	355M/L	2027.05	6.7	2.2	2.4	9.92464	42/92	2198.5	79	1490	94.8	95.9	96.2	0.79	0.86	0.88	537
HIGH-OUTPUT DESIGN																		
75	100	250S/M	476.2	7.2	2.4	2.6	1.15478	12/26	556	70	1475	92.5	93.6	93.7	0.77	0.85	0.87	133
110	150	280S/M	709.49	7.1	2.3	2.6	2.81036	27/59	935.2	76	1485	92.8	94.4	94.4	0.78	0.85	0.88	191

Notes:
**Class "F" insulation with ΔT105K*
Standard voltage, connection and frequency: 220-240V Δ 50Hz *380-415V Δ 50Hz*
380-415V Y 50Hz *660-690V Y 50Hz*
The values shown are subject to change without prior notice. To obtain guaranteed values please access our website.

Ex d / Ex de - Explosion Proof Motors - Cast Iron Frame
Improved Efficiency EFF2

Output		380 V								415 V							
		Rated speed (rpm)	% of full load						Full load current I_n (A)	Rated speed (rpm)	% of full load						Full load current I_n (A)
			Efficiency η			Power Factor (Cos φ)					Efficiency η			Power Factor (Cos φ)			
kW	HP		50	75	100	50	75	100			50	75	100	50	75	100	
II Pole - 3000 rpm																	
0.75	1	2870	72.5	76	77.8	0.73	0.81	0.86	1.7	2890	71.5	76	78.4	0.66	0.77	0.82	1.62
1.1	1.5	2850	76.5	78.8	79.5	0.75	0.84	0.89	2.36	2880	75.5	78.9	80.2	0.68	0.79	0.85	2.24
1.5	2	2830	80	81.5	81.2	0.75	0.84	0.89	3.15	2850	79.1	82.2	82.5	0.68	0.79	0.85	2.98
2.2	3	2820	82.8	83.6	83.3	0.75	0.84	0.87	4.61	2850	81.5	83.6	84.3	0.64	0.76	0.83	4.37
3	4	2870	83.5	85.6	85.1	0.8	0.86	0.89	6.02	2890	82.8	85.6	85.6	0.74	0.84	0.87	5.6
4	5.5	2880	85.5	87.5	87.2	0.8	0.86	0.89	7.83	2900	84.5	87.4	88.2	0.72	0.82	0.87	7.25
5.5	7.5	2930	84.5	87.5	88.2	0.77	0.85	0.89	10.6	2940	83.5	86.8	88.2	0.69	0.8	0.85	10.2
7.5	10	2910	86.5	87.5	87.5	0.8	0.87	0.9	14.5	2925	85.5	87.4	88.1	0.71	0.81	0.86	13.8
11	15	2940	88.3	90.1	90.2	0.8	0.86	0.89	20.8	2950	87.3	90	90.4	0.74	0.83	0.87	19.5
15	20	2935	90.1	91.2	91	0.81	0.87	0.89	28.1	2950	89.1	91	91.2	0.72	0.81	0.87	26.3
18.5	25	2940	90.7	92	91.5	0.78	0.86	0.89	34.5	2950	90.1	91.8	92	0.73	0.83	0.86	32.5
22	30	2945	91	92.1	92	0.82	0.88	0.9	40.4	2955	90	91.9	92.1	0.75	0.84	0.87	38.2
30	40	2960	90.5	92.1	92.6	0.8	0.87	0.89	55.3	2970	89.5	91.8	92.7	0.73	0.83	0.87	51.8
37	50	2960	91.7	93	93	0.8	0.87	0.89	67.9	2965	90.8	92.6	93	0.7	0.81	0.86	64.4
45	60	2960	91.9	93.4	93.5	0.86	0.9	0.92	79.5	2970	91.5	93.3	93.9	0.84	0.88	0.9	74.1
55	75	2965	91.8	93.2	93.5	0.86	0.91	0.92	97.1	2970	91.6	93.5	94	0.82	0.88	0.91	89.5
75	100	2970	91.9	93.6	94.3	0.84	0.88	0.9	134	2980	91	93.6	94.2	0.78	0.85	0.88	126
90	125	2970	92.3	93.9	94.5	0.82	0.88	0.9	161	2975	91.5	94.1	94.5	0.77	0.86	0.89	149
110	150	2970	93.1	94.4	94.9	0.81	0.87	0.9	196	2975	92.2	94.4	94.8	0.75	0.83	0.88	183
132	175	2965	93.5	94.7	94.8	0.84	0.89	0.91	232	2970	93	94.8	95.2	0.8	0.87	0.9	214
160	220	2970	94.2	95	95.3	0.86	0.9	0.91	280	2975	94	95	95.4	0.83	0.88	0.89	262
200	270	2980	93.7	95	95.3	0.9	0.92	0.92	347	2985	93.3	94.9	95.4	0.88	0.9	0.91	321
250	340	2980	94.5	95.8	96	0.9	0.92	0.93	425	2985	94.3	95.8	96.1	0.87	0.91	0.92	393
HIGH-OUTPUT DESIGN																	
75	100	2960	92.6	93.3	93.3	0.85	0.89	0.91	134	2965	92.5	93.7	94.2	0.81	0.87	0.9	123
110	150	2970	93.1	94.4	94.9	0.81	0.87	0.9	196	2975	92.2	94.4	94.8	0.75	0.83	0.88	183
IV Pole - 1500 rpm																	
0.55	0.75	1420	70.2	74.8	75	0.64	0.75	0.8	1.39	1430	68	73.8	75	0.55	0.68	0.75	1.36
0.75	1	1415	72	74.6	74	0.62	0.74	0.81	1.9	1440	70	74.4	74.4	0.54	0.68	0.77	1.82
1.1	1.5	1390	73.5	76.4	75.5	0.67	0.8	0.85	2.6	1410	70.5	76.2	76.2	0.56	0.71	0.8	2.51
1.5	2	1390	76.5	78.7	77.8	0.67	0.79	0.85	3.45	1420	73.5	78.5	78.8	0.58	0.72	0.8	3.31
2.2	3	1410	81.5	82	81.7	0.69	0.81	0.85	4.81	1430	80.5	82.3	83	0.61	0.75	0.81	4.55
3	4	1390	82	82.3	82	0.7	0.8	0.86	6.46	1415	80.5	82.5	82.7	0.65	0.75	0.82	6.15
4	5.5	1420	84	84.5	84	0.72	0.81	0.86	8.41	1440	82	84.2	84.2	0.62	0.74	0.82	8.06
5.5	7.5	1460	86.5	88.1	88	0.72	0.82	0.86	11	1470	84	86.8	87.8	0.6	0.74	0.82	10.6
7.5	10	1465	87	88.6	88.4	0.75	0.84	0.88	14.6	1470	85.6	88	88.6	0.65	0.77	0.83	14.2
11	15	1450	88.3	89.6	89.2	0.74	0.82	0.85	22	1460	86.8	89	89.8	0.65	0.76	0.82	20.8
15	20	1450	89.5	90.5	90.1	0.73	0.82	0.86	29.4	1460	88.4	90.3	90.6	0.67	0.78	0.83	27.8
18.5	25	1465	90.3	91.7	91.7	0.72	0.81	0.85	36.1	1470	89.3	91.3	92.1	0.65	0.76	0.82	34.1
22	30	1465	91.5	92.4	92.3	0.72	0.81	0.85	42.6	1475	90.5	92	92.5	0.63	0.75	0.81	40.8
30	40	1470	92.2	93	92.6	0.78	0.84	0.86	57.2	1480	91.5	93	93.2	0.72	0.8	0.84	53.3
37	50	1475	91.6	92.4	92.5	0.79	0.86	0.89	68.3	1480	90.8	92.1	92.9	0.72	0.83	0.87	63.7
45	60	1475	91.3	92.8	93.5	0.8	0.87	0.89	82.2	1480	91	92.9	93.5	0.72	0.83	0.87	77
55	75	1475	92.8	93.5	93.4	0.83	0.88	0.91	98.3	1480	92.5	93.4	93.6	0.77	0.85	0.89	91.9
75	100	1480	92.1	93.4	93.6	0.82	0.87	0.89	137	1485	91.5	93.6	94	0.76	0.84	0.87	128
90	125	1480	92.6	94.1	94.2	0.82	0.87	0.89	163	1485	92	93.9	94.2	0.78	0.85	0.88	151
110	150	1480	92.8	93.6	94.2	0.8	0.86	0.88	202	1485	92.8	94.4	94.5	0.76	0.83	0.87	186
132	175	1480	93	93.5	94.3	0.81	0.86	0.89	241	1485	92.2	94.7	94.7	0.76	0.84	0.87	223
160	220	1480	93	95	95.4	0.78	0.85	0.88	290	1485	94.2	95.1	95.5	0.73	0.82	0.86	271
200	270	1485	94.8	95	95.2	0.8	0.86	0.88	363	1490	94.5	95.1	95.3	0.76	0.84	0.86	339
250	340	1485	94.5	95.2	95.7	0.82	0.87	0.89	446	1490	94.1	95	95.7	0.77	0.85	0.87	418
280	380	1485	95.1	95.6	95.7	0.83	0.88	0.89	499	1490	95	95.6	95.8	0.79	0.86	0.87	467
315	430	1485	95	95.8	96.1	0.83	0.87	0.89	560	1490	94.5	95.8	96.2	0.76	0.84	0.87	524
HIGH-OUTPUT DESIGN																	
75	100	1475	92.6	93.4	93.5	0.8	0.86	0.88	138	1480	92.6	93.7	93.6	0.74	0.84	0.87	128
110	150	1480	92.8	93.6	94.2	0.8	0.86	0.88	202	1485	92.8	94.4	94.5	0.76	0.83	0.87	186

Ex d / Ex de - Explosion Proof Motors - Cast Iron Frame
Improved Efficiency EFF2

Output		IEC Frame	Full load torque C_n (Nm)	Locked rotor current I_r/I_n	Locked rotor torque T_r/T_n	Break-down torque T_b/T_n	Inertia J kgm²	Allowable locked rotor time Hot/Cold (s)	Weight (kg)	Sound dB (A)	Rated speed (rpm)	400 V						Full load current I_n (A)
												% of full load						
												Efficiency η			Power Factor (Cos φ)			
kW	HP											50	75	100	50	75	100	
VI Pole - 1000 rpm																		
0.75	1	90L	7.63	4.8	2.1	2.1	0.00504	16/35	33.3	45	920	70	72.6	72.4	0.54	0.67	0.76	1.97
1.1	1.5	90L	11.51	4.5	2.3	2.3	0.0056	12/26	34.5	45	915	68	71	72.9	0.48	0.62	0.72	3.02
1.5	2	100L	14.94	4.8	2.2	2.5	0.01121	18/40	43.1	44	940	74	77.3	77.5	0.53	0.66	0.74	3.78
2.2	3	112M	22.42	5	2.2	2.3	0.01682	14/31	56.5	48	940	77.5	80.5	80.1	0.53	0.66	0.74	5.36
3	4	132S	29.27	5.3	2	2.2	0.03489	20/44	77.2	52	960	80	82.7	82.5	0.58	0.7	0.77	6.82
4	5.5	132M	40.24	6	2.1	2.3	0.05039	18/40	91.4	52	960	83.6	85.5	85.8	0.59	0.7	0.77	8.74
5.5	7.5	132M	54.87	6.4	2.3	2.4	0.06202	14/31	99.5	52	960	84	85.8	85.8	0.54	0.66	0.74	12.5
7.5	10	160M	72.41	6.1	2.3	2.6	0.12209	17/37	145	56	970	87	88.2	88	0.62	0.74	0.81	15.2
9.2	12.5	160L	90.51	6.5	2.3	2.8	0.14364	12/26	115	56	970	86.5	88	87.6	0.61	0.74	0.81	18.7
11	15	160L	108.62	6.6	2.4	2.9	0.17595	13/29	170.2	56	970	87.2	88.3	88.3	0.62	0.75	0.82	21.9
15	20	180L	145.57	7.5	2.5	2.6	0.30338	9/20	217.9	56	965	89.1	90.1	89.8	0.8	0.88	0.91	26.5
18.5	25	200L	180.1	6	2.1	2.3	0.3767	15/33	270.1	58	975	89.7	90.7	90.2	0.74	0.82	0.86	34.4
22	30	200L	216.12	6	2.3	2.4	0.41258	14/31	280.4	58	975	89	90.9	91.3	0.7	0.79	0.84	41.4
30	40	225S/M	285.24	7.2	2.6	2.7	0.98842	20/44	422.8	61	985	90.5	91.8	91.8	0.77	0.84	0.87	54.2
37	50	250S/M	358.37	7.5	2.7	2.6	1.22377	18/40	490.5	61	980	90.2	92.4	92.5	0.77	0.85	0.87	66.4
45	60	280S/M	427.86	6.8	2.4	2.6	2.29824	24/53	735.8	66	985	90.5	92.3	92.6	0.68	0.78	0.83	84.5
55	75	280S/M	534.82	6.5	2.3	2.5	2.64298	23/51	774.6	66	985	91.6	93.2	93.5	0.71	0.82	0.85	100
75	100	315S/M	713.09	6.7	2.3	2.5	3.44737	20/44	963.1	69	985	91.6	93.5	93.7	0.71	0.81	0.85	136
90	125	315S/M	891.37	6.3	2.1	2.3	3.67719	18/40	993.1	69	985	92.5	94	93.9	0.71	0.81	0.85	163
110	150	315S/M	1069.64	6.4	2.3	2.4	5.28596	18/40	1169.3	69	985	93.4	94.4	94.5	0.71	0.8	0.84	200
132	175	355M/L	1241.61	6.1	2	2.3	8.10159	90/198	1685.3	73	990	92.5	94.7	94.7	0.65	0.75	0.8	251
160	220	355M/L	1560.88	6.2	1.9	2.1	9.53128	72/158	1730	73	990	93	95	95.3	0.67	0.77	0.82	295
200	270	355M/L	1915.63	6.3	2.1	2.3	12.39067	85/187	1910	73	990	93.5	94.5	94.8	0.7	0.78	0.81	376
250	340	355M/L	2400.15	6.1	2.2	2.2	14.77349	64/141	2185	73	995	94	95.1	95.6	0.7	0.79	0.82	460
280	380	355M/L	2696.07	6	2.1	2.2	14.77349	54/119	2185	73	990	94.3	95.2	95.4	0.68	0.77	0.8	530
HIGH-OUTPUT DESIGN																		
45	60	250S/M	430.04	8	2.8	2.8	1.55324	18/40	544.9	61	980	91	92.3	92.6	0.76	0.84	0.87	79.7
75	100	280S/M	713.09	6.7	2.3	2.5	3.44737	20/44	800	66	985	91.6	93.5	93.7	0.71	0.81	0.85	136
VIII Pole - 750 rpm																		
0.37	0.5	90L	5.05	3.5	2.1	2.1	0.00448	29/64	30	43	695	51	59	61	0.43	0.53	0.64	1.37
0.55	0.75	90L	7.63	3.7	2.1	2.1	0.0056	18/40	34.1	43	690	51.6	60	64	0.4	0.5	0.6	2.07
0.75	1	100L	9.96	4.2	2	2.1	0.00952	30/66	41.1	50	705	65	70	71	0.42	0.54	0.63	2.42
1.1	1.5	100L	15.05	4.1	1.7	2.1	0.01289	23/51	44.8	50	700	66	71.5	72.2	0.43	0.56	0.65	3.38
1.5	2	112M	20.07	4.6	2.4	2.4	0.02243	19/42	60.9	46	700	74	75.5	76.3	0.46	0.6	0.68	4.17
2.2	3	132S	29.68	5.3	2.1	2.3	0.0552	19/42	81.9	48	710	78.5	79.3	79.4	0.51	0.64	0.72	5.55
3	4	132M	39.57	5.9	2.5	2.6	0.07527	16/35	94.9	48	710	79	82	82.5	0.52	0.64	0.72	7.29
4	5.5	160M	52.92	5.2	2.2	2.7	0.12209	33/73	144.7	51	730	81.3	84.3	86	0.47	0.6	0.69	9.73
5.5	7.5	160M	72.16	5.2	2.3	2.7	0.14364	23/51	157	51	730	81.5	84.1	85.2	0.46	0.59	0.69	13.5
7.5	10	160L	96.88	4.9	2	2.5	0.16518	15/33	165.8	51	725	83.5	85.7	85.5	0.51	0.63	0.72	17.6
11	15	180L	145.32	6.8	2.3	2.5	0.2758	11/24	208.1	51	725	87	88.5	88.3	0.68	0.79	0.84	21.4
15	20	200L	192.44	4.6	2	2.1	0.3767	23/51	269.8	53	730	86.5	88.6	89	0.56	0.68	0.75	32.4
18.5	25	225S/M	240.55	6.9	2.1	2.8	0.84722	17/37	393.4	56	730	88.5	90.1	90	0.72	0.8	0.85	34.9
22	30	225S/M	288.66	7.5	2.2	2.7	0.98842	19/42	419.3	56	730	89	91	91	0.73	0.82	0.85	41.1
30	40	250S/M	384.87	7.9	2.3	2.9	1.22377	17/37	486.6	56	730	89.5	91.2	91.6	0.7	0.79	0.84	56.3
37	50	280S/M	474.59	6.5	1.9	2.3	2.29824	29/64	700	59	740	90.5	92.2	92.3	0.67	0.77	0.81	71.4
45	60	280S/M	569.51	6.5	2	2.4	2.64298	26/57	765	59	740	90.5	92.1	92.3	0.65	0.75	0.8	88
55	75	315S/M	711.89	6.5	1.9	2.2	3.10263	27/59	845	62	740	91.2	93.1	93	0.69	0.78	0.82	104
75	100	315S/M	949.18	6.6	1.9	2.2	4.36666	20/44	1062	62	740	92	93.4	93.5	0.67	0.79	0.82	141
90	125	315S/M	1186.48	6.8	2.1	2.4	5.28596	23/51	1220	62	740	92.5	93.8	94.2	0.7	0.78	0.83	166
110	150	355M/L	1423.78	6.4	1.5	2.2	11.9324	41/90	1750	70	740	92.5	94.1	94.5	0.63	0.74	0.8	210
132	175	355M/L	1661.07	6.5	1.6	2.2	13.18845	47/103	1800	70	740	93	94.5	94.8	0.63	0.73	0.79	254
160	220	355M/L	2088.2	6.6	1.6	2.2	16.32856	42/92	1710	70	740	93.3	94.7	94.7	0.64	0.75	0.8	305
200	270	355M/L	2562.8	6.8	1.6	2.1	19.46866	37/81	1900	70	740	93.3	94.6	95.2	0.6	0.72	0.79	384
HIGH-OUTPUT DESIGN																		
37	50	250S/M	481.09	8.2	2.3	2.8	1.55324	13/29	540	56	730	89	91.5	91.5	0.68	0.78	0.84	69.5

Notes:
**Class "F" insulation with ΔT105K*
Standard voltage, connection and frequency: 220-240V Δ 50Hz *380-415V Δ 50Hz*
380-415V Y 50Hz *660-690V Y 50Hz*
The values shown are subject to change without prior notice. To obtain guaranteed values please access our website.

Ex d / Ex de - Explosion Proof Motors - Cast Iron Frame
Improved Efficiency EFF2

Output		380 V								415 V							
		Rated speed (rpm)	% of full load						Full load current I_n (A)	Rated speed (rpm)	% of full load						Full load current I_n (A)
			Efficiency η			Power Factor (Cos φ)					Efficiency η			Power Factor (Cos φ)			
kW	HP		50	75	100	50	75	100			50	75	100	50	75	100	
VI Pole - 1000 rpm																	
0.75	1	910	71.5	72.8	71.5	0.58	0.71	0.79	2.02	930	68.5	72.4	72.4	0.5	0.64	0.73	1.97
1.1	1.5	905	71	72	72.9	0.52	0.66	0.76	3.02	925	65	70.5	73	0.45	0.58	0.68	3.08
1.5	2	930	75	77.5	77	0.58	0.7	0.76	3.89	950	73	77.3	77.6	0.5	0.63	0.71	3.79
2.2	3	930	79	80.8	79.7	0.58	0.7	0.76	5.52	950	76	80.3	80.5	0.5	0.63	0.72	5.28
3	4	955	81	83	82	0.61	0.72	0.79	7.04	965	79	82.5	82.6	0.53	0.66	0.74	6.83
4	5.5	955	84.5	85.7	85.4	0.61	0.72	0.79	9.01	965	82.6	85.3	85.9	0.56	0.67	0.75	8.64
5.5	7.5	955	85	86.1	85.6	0.58	0.7	0.77	12.7	965	83	85.5	86	0.5	0.62	0.71	12.5
7.5	10	965	87.5	88.4	87.5	0.66	0.78	0.83	15.7	970	86.5	88	88	0.58	0.71	0.79	15
9.2	12.5	970	87.5	88.2	87.5	0.65	0.76	0.82	19.5	975	85.5	87.8	87.5	0.56	0.71	0.79	18.5
11	15	970	88	88.5	88	0.67	0.78	0.84	22.6	975	86.5	88	88.3	0.58	0.72	0.8	21.7
15	20	960	89	90	89.5	0.82	0.89	0.91	28	970	89	90.5	90.5	0.78	0.87	0.9	25.6
18.5	25	970	90	90.5	89.8	0.76	0.84	0.87	36	980	89.3	90.5	90.5	0.72	0.8	0.84	33.9
22	30	970	89.6	91	91.2	0.74	0.82	0.85	43.1	980	88.4	90.7	91.3	0.66	0.76	0.82	40.9
30	40	980	91	91.8	91.6	0.8	0.86	0.88	56.5	985	90	91.8	92.2	0.73	0.81	0.86	52.6
37	50	980	90.5	92.5	92.4	0.8	0.86	0.88	69.1	985	89.5	92.4	92.6	0.73	0.82	0.86	64.6
45	60	985	91	92.3	92.6	0.72	0.81	0.85	86.9	990	90	92.3	92.7	0.64	0.76	0.82	82.4
55	75	985	92	93.2	93.4	0.74	0.84	0.87	103	990	91.2	93.2	93.6	0.68	0.8	0.84	97.3
75	100	985	92	93.5	93.5	0.74	0.82	0.86	142	990	91.2	93.5	93.8	0.69	0.8	0.84	132
90	125	985	92.8	93.9	93.6	0.74	0.83	0.86	170	990	92.2	93.9	93.9	0.69	0.79	0.84	159
110	150	985	93.6	94.3	94.3	0.74	0.82	0.85	208	985	93.2	94.5	94.6	0.69	0.79	0.83	195
132	175	990	93	94.7	94.5	0.7	0.8	0.82	259	995	92	94.7	94.7	0.6	0.7	0.77	252
160	220	990	93.5	95.2	95.2	0.73	0.8	0.84	304	990	92.5	94.9	95.4	0.63	0.74	0.8	292
200	270	990	94	94.7	94.8	0.74	0.81	0.83	386	990	93	94.3	94.8	0.66	0.75	0.79	372
250	340	995	94.3	95.2	95.5	0.74	0.81	0.83	479	995	93.7	95	95.8	0.67	0.77	0.81	448
280	380	985	94.7	95.3	95.4	0.73	0.8	0.81	551	990	93.9	95.1	95.3	0.64	0.74	0.79	517
HIGH-OUTPUT DESIGN																	
45	60	980	91.5	92.3	92.5	0.79	0.86	0.88	83	985	90.5	92.3	92.7	0.73	0.82	0.86	77.6
75	100	985	92	93.5	93.5	0.74	0.82	0.86	142	990	91.2	93.5	93.8	0.69	0.8	0.84	132
VIII Pole - 750 rpm																	
0.37	0.5	685	54	61	62	0.46	0.56	0.67	1.35	700	48	57	60	0.4	0.5	0.6	1.43
0.55	0.75	680	54	61	64.7	0.44	0.55	0.64	2.02	700	48.5	57.2	62.5	0.38	0.47	0.56	2.19
0.75	1	695	67	71	70.5	0.46	0.58	0.66	2.45	710	63	69	70.5	0.38	0.5	0.6	2.47
1.1	1.5	690	68	72	72	0.47	0.6	0.68	3.41	710	64	70.5	72.2	0.4	0.52	0.62	3.42
1.5	2	695	75	76	76	0.5	0.63	0.7	4.28	705	73	75	76.3	0.43	0.57	0.66	4.14
2.2	3	700	79	79.5	79	0.56	0.68	0.75	5.64	715	78	79	79.5	0.48	0.61	0.7	5.5
3	4	700	80	82.5	82	0.54	0.66	0.74	7.51	715	78	81.5	82.5	0.5	0.62	0.7	7.23
4	5.5	725	82.6	84.8	85.9	0.51	0.64	0.72	9.83	730	80	83.7	86	0.44	0.57	0.66	9.8
5.5	7.5	725	82.5	84.7	85.2	0.5	0.63	0.72	13.6	730	80.5	83.5	85	0.42	0.55	0.66	13.6
7.5	10	720	84.5	86	85.3	0.54	0.66	0.74	18.1	730	82.5	85.5	85.5	0.48	0.6	0.7	17.4
11	15	720	87.5	88.3	87.8	0.71	0.81	0.85	22.4	730	86.5	88.6	88.5	0.65	0.77	0.83	20.8
15	20	725	87.5	88.9	88.9	0.61	0.72	0.77	33.3	730	85.5	88.3	88.9	0.5	0.64	0.72	32.6
18.5	25	730	88.8	90	89.8	0.75	0.83	0.86	36.4	735	88.2	90.3	90.2	0.68	0.78	0.84	34
22	30	730	89.4	90.9	90.5	0.76	0.84	0.86	42.9	735	88.6	91	91.2	0.71	0.8	0.84	40
30	40	730	90	91.3	91.3	0.73	0.81	0.85	58.7	735	89	91.1	91.8	0.66	0.77	0.83	54.8
37	50	735	91	92.2	92.1	0.7	0.79	0.82	74.4	740	90	92.2	92.4	0.64	0.75	0.79	70.5
45	60	735	91	92.2	92	0.7	0.77	0.82	90.6	740	90	92	92.3	0.6	0.72	0.78	87
55	75	735	91.6	93.2	92.8	0.72	0.8	0.83	108	740	90.7	93	93	0.65	0.76	0.8	103
75	100	735	92.4	93.3	93.3	0.7	0.8	0.83	147	740	91.6	93.4	93.4	0.64	0.78	0.81	138
90	125	735	92.9	93.9	94	0.73	0.81	0.84	173	740	92.1	93.7	94.2	0.67	0.75	0.81	164
110	150	740	93	94.2	94.5	0.66	0.77	0.82	216	745	92	94.1	94.5	0.6	0.71	0.78	208
132	175	740	93.5	94.6	94.8	0.66	0.75	0.81	261	745	92.5	94.4	94.8	0.6	0.71	0.77	252
160	220	740	93.8	94.8	94.8	0.68	0.77	0.81	317	745	92.8	94.7	94.7	0.6	0.72	0.79	298
200	270	740	93.8	94.8	95.1	0.65	0.75	0.81	394	745	92.8	94.4	95.2	0.56	0.69	0.77	380
HIGH-OUTPUT DESIGN																	
37	50	730	89.5	91.5	91	0.72	0.82	0.86	71.8	735	88.5	91.5	91.5	0.64	0.76	0.82	68.6

Ex d / Ex de - Explosion Proof Motors
Cast Iron Frame
Premium Efficiency EFF1

Standard Features:

- Three-phase, multivoltage, IP55, TEFC
- Output: 0.26 up to 315kW
- Frames: 90S/L up to 355M/L
- Voltage: 220-240/380-415V (up to 100L)
  380-415/660V (from 112M and up)
- Class “F” insulation (ΔT=80K)
- Continuous duty: S1
- Design N
- Ambient temperature: 40°C, at 1000 m.a.s.l.
- Squirrel cage rotor/Aluminium die cast
- Stainless steel nameplate AISI 316
- Dimensions according to IEC-72
- Performance characteristics according to IEC 34
- Regreasing nipple from frame 225S/M and above
- Metric threaded cable entries on the terminal box
- Thermistors (1 per phase) fitted in frame 160M and above
- Suitable for inverter duty applications
- Color: RAL 5009

Options Available:

- Degree of Protection: IP56, IP65 or IP66 (W)
- Bearing seals:
  - Lip seal
  - Oil seal
  - Labyrinth taconite seal and W3seal for frames 90S and above
- Thermal protection:
  - Thermistors: frame 132M and below
  - Thermostats
  - RTD-PT 100
- Space heaters
- Design H
- Class “H” insulation
- Roller bearings for frame 160M and above

More options available, on request

Typical Applications:

- Pumps
- Fans
- Crushers
- Conveyor belts
- Mills
- Centrifugal machines
- Presses
- Elevators
- Packaging equipment
- Grinders and others.

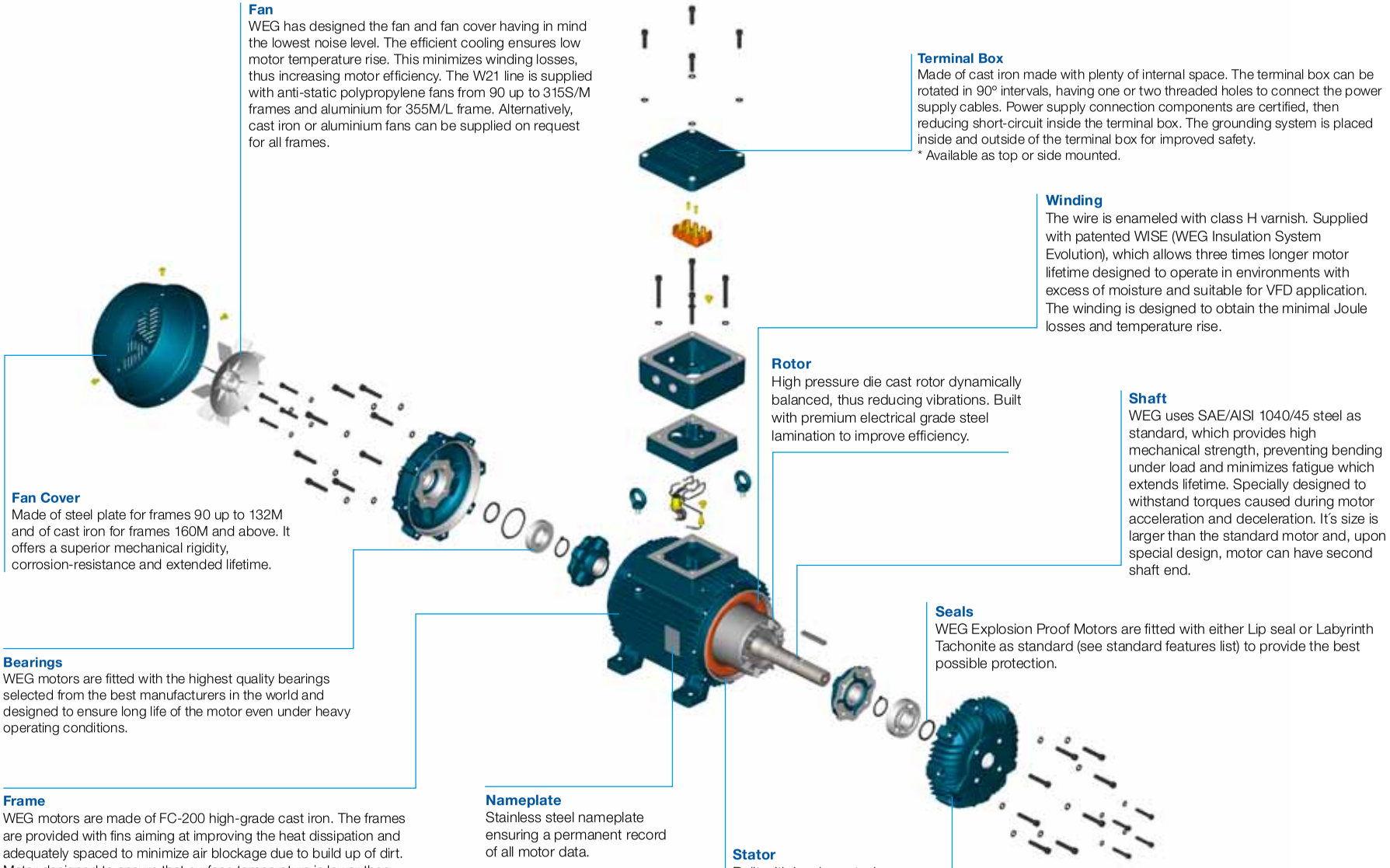

Fan
WEG has designed the fan and fan cover having in mind the lowest noise level. The efficient cooling ensures low motor temperature rise. This minimizes winding losses, thus increasing motor efficiency. The W21 line is supplied with anti-static polypropylene fans from 90 up to 315S/M frames and aluminium for 355M/L frame. Alternatively, cast iron or aluminium fans can be supplied on request for all frames.

Terminal Box
Made of cast iron made with plenty of internal space. The terminal box can be rotated in 90° intervals, having one or two threaded holes to connect the power supply cables. Power supply connection components are certified, then reducing short-circuit inside the terminal box. The grounding system is placed inside and outside of the terminal box for improved safety.
* Available as top or side mounted.

Winding
The wire is enameled with class H varnish. Supplied with patented WISE (WEG Insulation System Evolution), which allows three times longer motor lifetime designed to operate in environments with excess of moisture and suitable for VFD application. The winding is designed to obtain the minimal Joule losses and temperature rise.

Rotor
High pressure die cast rotor dynamically balanced, thus reducing vibrations. Built with premium electrical grade steel lamination to improve efficiency.

Shaft
WEG uses SAE/AISI 1040/45 steel as standard, which provides high mechanical strength, preventing bending under load and minimizes fatigue which extends lifetime. Specially designed to withstand torques caused during motor acceleration and deceleration. It's size is larger than the standard motor and, upon special design, motor can have second shaft end.

Fan Cover
Made of steel plate for frames 90 up to 132M and of cast iron for frames 160M and above. It offers a superior mechanical rigidity, corrosion-resistance and extended lifetime.

Seals
WEG Explosion Proof Motors are fitted with either Lip seal or Labyrinth Tachonite as standard (see standard features list) to provide the best possible protection.

Bearings
WEG motors are fitted with the highest quality bearings selected from the best manufacturers in the world and designed to ensure long life of the motor even under heavy operating conditions.

Frame
WEG motors are made of FC-200 high-grade cast iron. The frames are provided with fins aiming at improving the heat dissipation and adequately spaced to minimize air blockage due to build up of dirt. Motor designed to ensure that surface temperature is lower than ignition temperature of the gas that is present in the environment. Mechanical components are designed towithstand an explosion inside the motor without causing any risk to outside areas since there is no flame flame propagation through flame path. The motors can be mounted in any position, horizontal and vertical, withstanding the maximum axial and radial thrusts.

Nameplate
Stainless steel nameplate ensuring a permanent record of all motor data.

Stator
Built with low loss steel lamination to reduce magnetic losses and operating temperature.

Endshields
Made of cast iron, they are provided with external fins for better temperature dissipation, thus increasing bearing life.

Ex d / Ex de - Explosion Proof Motors - Cast Iron Frame
Premium Efficiency EFF1

Output		IEC Frame	Full load torque C_n (Nm)	Locked rotor current I_l/I_n	Locked rotor torque T_l/T_n	Break-down torque T_b/T_n	Inertia J kgm²	Allowable locked rotor time Hot/Cold (s)	Weight (kg)	Sound dB (A)	Rated speed (rpm)	400 V						Full load current I_n (A)
												% of full load						
												Efficiency η			Power Factor (Cos φ)			
kW	HP											50	75	100	50	75	100	
II Pole - 3000 rpm																		
5.5	7.5	132S	1.83	8	2.7	3.2	0.02056	19/42	85.4	67	2935	88.5	90	90.1	0.71	0.81	0.86	10.2
7.5	10	132S	2.45	7.3	2.5	3	0.02056	10/22	81.3	67	2925	87.3	88.4	89.5	0.67	0.79	0.85	14.2
9.2	12.5	160M	3.03	8.5	2.5	3.2	0.04706	15/33	144.8	70	2955	87.5	90.5	91	0.72	0.82	0.86	17
11	15	160M	3.64	8.5	2.8	3.3	0.05295	14/31	151.5	70	2950	90	91.9	92.3	0.7	0.8	0.85	20.2
15	20	160M	4.86	7.8	2.5	3.2	0.05295	10/22	151.5	70	2945	90.4	91.7	91.8	0.74	0.83	0.87	27.1
18.5	25	160L	6.08	8.2	2.6	3.3	0.06471	10/22	169	70	2945	91.2	92.4	92.3	0.75	0.84	0.87	33.3
22	30	180M	7.28	8.5	2.8	3.1	0.11351	13/29	217.7	70	2950	91.8	93	93	0.76	0.85	0.88	38.8
30	40	200L	9.68	7.4	2.7	2.8	0.2063	31/68	293.6	74	2960	92.8	93.7	94	0.77	0.84	0.87	52.9
37	50	200L	12.09	7.6	2.7	2.7	0.22424	25/55	260	74	2960	93.2	94	94.6	0.76	0.84	0.87	64.9
45	60	225S/M	14.46	8.5	2.4	2.9	0.44846	18/40	461	82	2970	93.6	94.5	94.7	0.82	0.88	0.9	76.2
55	75	250S/M	18.11	8.9	2.6	3.4	0.50227	15/33	513	82	2965	94	95	95	0.85	0.89	0.91	91.8
75	100	280S/M	24.07	7.7	2.2	2.9	1.27083	51/112	841	83	2975	93.2	94.4	95.6	0.83	0.87	0.89	127
90	125	280S/M	30.08	8.2	2.2	2.8	1.41204	42/92	877	83	2975	94.1	95.5	95.8	0.82	0.88	0.9	151
110	150	315S/M	36.1	8	2.3	2.8	1.50617	38/84	1000	83	2975	94.4	95.3	95.8	0.82	0.87	0.89	186
132	175	315S/M	42.12	7.8	2.2	2.7	1.74151	32/70	1060	83	2975	94.3	95.5	96	0.82	0.88	0.89	223
160	220	315S/M	53.04	7.8	2.2	2.5	2.11806	33/73	1164	83	2970	95	96	96.2	0.85	0.89	0.9	267
200	270	355M/L	64.76	7.2	1.8	2.6	4.82631	70/154	1830	81	2985	93.5	95	95.4	0.89	0.91	0.92	329
250	340	355M/L	81.55	7.8	1.7	2.5	5.74561	65/143	1972	81	2985	95.5	96.3	96.4	0.87	0.91	0.92	407
HIGH-OUTPUT DESIGN																		
75	100	250S/M	24.15	8.5	3	3.4	0.55609	10/22	570	82	2965	93	94.3	94.6	0.83	0.88	0.9	127
110	150	280S/M	36.1	8	2.3	2.8	1.50617	38/84	890	83	2975	94.4	95.3	95.8	0.82	0.87	0.89	186
IV Pole - 1500 rpm																		
5.5	7.5	132S	3.67	8	2.4	3	0.04264	10/22	83.6	56	1465	86.5	89.1	89.2	0.64	0.76	0.83	10.7
7.5	10	132M	4.89	8.2	2.5	3	0.05815	9/20	99.3	56	1465	88.5	90	90.2	0.7	0.81	0.86	14
11	15	160M	7.33	6	2.5	2.6	0.10037	19/42	155	67	1465	90.3	91.4	91.2	0.68	0.78	0.83	21
15	20	160L	9.77	6.1	2.5	2.6	0.11542	17/37	165	67	1465	90.5	91.9	91.8	0.66	0.77	0.83	28.4
18.5	25	180M	12.18	8	2.9	2.9	0.19733	12/26	222	64	1470	91.6	93	93.4	0.65	0.76	0.82	34.9
22	30	180L	14.61	7.5	2.7	2.9	0.19733	14/31	216.8	64	1470	92	92.9	93.1	0.65	0.77	0.82	41.6
30	40	200L	19.42	7	2.5	2.6	0.33095	18/40	290	69	1475	93	94	93.9	0.67	0.78	0.83	55.6
37	50	225S/M	24.19	7.2	2.2	2.7	0.69987	16/35	411	70	1480	93	94	94.1	0.76	0.84	0.87	65.2
45	60	225S/M	29.03	7.4	2.4	3	0.83984	15/33	440	70	1480	94	94.5	94.5	0.76	0.83	0.88	78.1
55	75	250S/M	36.41	7.2	2.5	2.8	1.15478	17/37	556	70	1475	94.1	94.7	94.6	0.77	0.86	0.89	94.3
75	100	280S/M	48.22	7.2	2.2	2.6	2.16799	38/84	840	70	1485	93.9	95.1	95.2	0.79	0.85	0.88	129
90	125	280S/M	60.27	7.8	2.4	2.6	2.81036	25/55	934.4	70	1485	94.3	95.1	95.3	0.79	0.85	0.88	155
110	150	315S/M	72.32	7.6	2.4	2.6	3.21184	29/64	1100	72	1485	94.5	95.2	95.6	0.8	0.86	0.88	189
132	175	315S/M	84.38	7.8	2.4	2.6	3.77391	25/55	1190	72	1485	94.8	95.4	95.7	0.78	0.85	0.88	226
160	220	315S/M	106.07	7.6	2.4	2.6	3.77391	20/44	1210	72	1485	94.7	95.7	95.9	0.76	0.84	0.87	277
185	250	355M/L	120.13	7.2	2.2	2.6	6.34151	53/117	1415	79	1490	94.8	95.6	95.9	0.78	0.85	0.87	320
200	270	355M/L	129.75	6.6	2.1	2.3	6.85703	49/108	1817	79	1490	95.3	95.8	96	0.8	0.86	0.88	342
250	340	355M/L	163.38	6.9	2.2	2.5	8.12016	36/79	1921	79	1490	95.3	96.3	96.5	0.8	0.86	0.88	425
315	430	355M/L	206.63	6.5	2.2	2.4	11.18495	42/92	2197	79	1490	95.8	96.3	96.6	0.79	0.86	0.89	529
HIGH-OUTPUT DESIGN																		
110	150	280S/M	72.32	7.6	2.4	2.6	3.21184	29/64	1065	70	1485	94.5	95.2	95.6	0.8	0.86	0.88	189

Notes:
**Class "F" insulation with ΔT105K*
Standard voltage, connection and frequency: 220-240V Δ 50Hz *380-415V Δ 50Hz*
380-415V Y 50Hz *660-690V Y 50Hz*
The values shown are subject to change without prior notice. To obtain guaranteed values please access our website.

Ex d / Ex de - Explosion Proof Motors - Cast Iron Frame
Premium Efficiency EFF1

Output		380 V								415 V							
		Rated speed (rpm)	% of full load						Full load current I_n (A)	Rated speed (rpm)	% of full load						Full load current I_n (A)
			Efficiency η			Power Factor (Cos φ)					Efficiency η			Power Factor (Cos φ)			
kW	HP		50	75	100	50	75	100			50	75	100	50	75	100	
II Pole - 3000 rpm																	
5.5	7.5	2930	89	90.3	90.2	0.75	0.83	0.87	10.6	2940	88	89.8	90	0.68	0.78	0.84	10.1
7.5	10	2915	88	88.7	89.3	0.73	0.83	0.87	14.7	2930	86.5	88	89.5	0.62	0.75	0.82	14.2
9.2	12.5	2950	88	90.5	90.8	0.76	0.84	0.87	17.7	2960	87	90.4	91	0.69	0.8	0.84	16.7
11	15	2945	90.5	92	92.2	0.74	0.83	0.87	20.8	2955	89.5	91.8	92.2	0.66	0.77	0.83	20
15	20	2935	90.9	91.8	91.6	0.79	0.86	0.88	28.3	3950	89.9	91.6	91.9	0.71	0.8	0.86	26.4
18.5	25	2940	91.6	92.5	92.1	0.8	0.86	0.88	34.7	2950	90.8	92.3	92.4	0.72	0.82	0.85	32.8
22	30	2945	92.1	93	92.9	0.8	0.87	0.89	40.4	2955	91.5	92.9	93	0.73	0.83	0.86	38.3
30	40	2955	93	93.7	93.8	0.81	0.86	0.88	55.2	2965	92.6	93.7	94.1	0.74	0.82	0.86	51.6
37	50	2955	93.4	94	94.4	0.8	0.86	0.88	67.7	2965	93	94	94.6	0.72	0.82	0.86	63.3
45	60	2965	93.9	94.5	94.5	0.84	0.89	0.91	79.5	2970	93.3	94.5	94.6	0.8	0.87	0.89	74.4
55	75	2960	94.2	94.7	94.7	0.87	0.9	0.92	95.9	2970	93.8	95	95	0.83	0.88	0.9	89.5
75	100	2970	93.4	94.4	95.4	0.85	0.88	0.9	133	2975	93	94.4	95.5	0.81	0.86	0.88	124
90	125	2975	94.3	95.5	95.8	0.84	0.89	0.9	159	2980	93.9	95.5	95.8	0.8	0.87	0.89	147
110	150	2970	94.6	95.4	95.7	0.84	0.88	0.9	194	2975	94.2	95.2	95.8	0.8	0.86	0.88	182
132	175	2970	94.5	95.5	96	0.84	0.89	0.9	232	2975	94.1	95.4	96	0.8	0.87	0.89	215
160	220	2965	95	95.9	96.1	0.86	0.9	0.91	278	2975	94.9	96	96.2	0.83	0.88	0.89	260
200	270	2980	93.7	95	95.3	0.9	0.92	0.92	347	2985	93.3	94.9	95.4	0.88	0.9	0.91	321
250	340	2980	95.5	96.3	96.4	0.89	0.92	0.93	424	2985	95.4	96.3	96.4	0.86	0.91	0.92	392
HIGH-OUTPUT DESIGN																	
75	100	2960	93.2	94.3	94.3	0.85	0.89	0.91	133	2965	92.8	94.3	94.6	0.81	0.87	0.9	123
110	150	2970	94.6	95.4	95.7	0.84	0.88	0.9	194	2975	94.2	95.2	95.8	0.8	0.86	0.88	182
IV Pole - 1500 rpm																	
5.5	7.5	1460	87.5	89.3	89	0.7	0.8	0.85	11	1465	85.5	88.9	89.2	0.59	0.72	0.81	10.6
7.5	10	1460	89	90	89.8	0.74	0.83	0.87	14.6	1465	88	89.5	90.3	0.65	0.78	0.84	13.8
11	15	1460	90.6	91.5	91	0.72	0.81	0.85	21.6	1470	90	91.3	91.3	0.64	0.75	0.81	20.7
15	20	1460	90.9	91.9	91.5	0.7	0.8	0.85	29.3	1470	90.1	91.9	91.8	0.62	0.74	0.81	28.1
18.5	25	1465	91.8	93	93.3	0.7	0.8	0.84	35.9	1475	91.3	92.9	93.3	0.6	0.73	0.8	34.5
22	30	1465	92.5	93	92.9	0.7	0.8	0.84	42.8	1475	91.5	92.8	93.1	0.61	0.74	0.8	41.1
30	40	1475	93.5	94.1	93.7	0.71	0.81	0.85	57.2	1480	92.5	93.9	93.8	0.63	0.75	0.81	54.9
37	50	1480	93.4	94	94	0.8	0.86	0.88	68	1485	92.6	93.9	94	0.73	0.82	0.86	63.7
45	60	1480	94.2	94.4	94.3	0.79	0.85	0.89	81.5	1485	93.8	94.3	94.5	0.73	0.81	0.87	76.1
55	75	1475	94.2	94.6	94.4	0.8	0.88	0.9	98.4	1480	94	94.7	94.7	0.75	0.85	0.88	91.8
75	100	1480	94.1	95	95	0.81	0.86	0.88	136	1485	93.7	95	95.2	0.77	0.84	0.87	126
90	125	1485	94.5	95.1	95.2	0.81	0.87	0.89	161	1485	94.1	95	95.3	0.77	0.84	0.87	151
110	150	1480	94.7	95.2	95.4	0.82	0.87	0.89	197	1485	94.3	95.1	95.6	0.78	0.85	0.87	184
132	175	1480	95	95.4	95.6	0.8	0.86	0.89	236	1485	94.6	95.3	95.7	0.76	0.84	0.87	221
160	220	1480	94.9	95.7	95.8	0.78	0.86	0.88	288	1485	94.5	95.7	95.9	0.74	0.82	0.86	270
185	250	1490	95	95.6	95.7	0.8	0.86	0.88	334	1490	94.5	95.6	95.9	0.76	0.84	0.86	312
200	270	1485	95.3	95.6	95.7	0.83	0.87	0.89	357	1490	95	95.8	96	0.78	0.85	0.87	333
250	340	1485	95.5	96.3	96.4	0.82	0.87	0.89	443	1490	95.1	96.1	96.4	0.77	0.85	0.87	415
315	430	1485	96	96.4	96.5	0.83	0.87	0.89	557	1490	95.5	96.2	96.6	0.73	0.84	0.88	516
HIGH-OUTPUT DESIGN																	
110	150	1480	94.7	95.2	95.4	0.82	0.87	0.89	197	1485	94.3	95.1	95.6	0.78	0.85	0.87	184

Ex d / Ex de - Explosion Proof Motors - Cast Iron Frame
Premium Efficiency EFF1

Output		IEC Frame	Full load torque C_n (Nm)	Locked rotor current I_l/I_n	Locked rotor torque T_l/T_n	Break-down torque T_b/T_n	Inertia J kgm²	Allowable locked rotor time Hot/Cold (s)	Weight (kg)	Sound dB (A)	Rated speed (rpm)	400 V						Full load current I_n (A)
												% of full load						
												Efficiency η			Power Factor (Cos φ)			
kW	HP											50	75	100	50	75	100	
VI Pole - 1000 rpm																		
3	4	132S	6	2.98	2.1	2.5	0.04264	28/62	81.8	52	960	82	85	86.5	0.53	0.67	0.74	6.76
4	5.5	132M	6.5	4.1	2.2	2.5	0.05039	21/46	91.4	52	960	85	86.6	87.2	0.56	0.69	0.76	8.71
5.5	7.5	132M	6.4	5.59	2.2	2.4	0.06202	14/31	99.5	52	960	84.5	86.7	86.7	0.54	0.67	0.75	12.2
7.5	10	160M	6.6	7.38	2.5	2.9	0.14364	19/42	151	56	970	87.5	89.5	90	0.61	0.74	0.81	14.8
9.2	12.5	160L	6.2	9.23	2.2	2.7	0.16518	15/33	166	56	970	89.4	90.1	90.1	0.6	0.73	0.8	18.4
11	15	160L	7	11.07	2.4	2.7	0.17595	13/29	169.9	56	970	89	90.3	90.3	0.58	0.72	0.79	22.3
15	20	180L	8	14.76	2.7	3	0.28959	9/20	232	56	970	91.2	91.9	91.6	0.72	0.81	0.87	27.2
18.5	25	200L	6.3	18.36	2.3	2.5	0.37671	17/37	279.8	58	975	91.3	92.7	92.9	0.67	0.78	0.82	35.1
22	30	200L	6.2	22.03	2.3	2.6	0.44846	15/33	240	58	975	91.2	92.6	92.9	0.65	0.75	0.82	41.7
30	40	225S/M	7	29.08	2.6	2.6	0.98842	21/46	425	61	985	91.7	93	93.5	0.73	0.81	0.85	54.5
37	50	250S/M	7	36.53	2.5	2.6	1.3179	20/44	500	61	980	91.8	94	94	0.72	0.81	0.84	67.6
45	60	280S/M	6.8	43.61	2.2	2.7	2.29824	27/59	737	66	985	92	93.6	94.2	0.67	0.77	0.82	84.1
55	75	280S/M	6.7	54.52	2.1	2.6	2.64298	21/46	773	66	985	92.5	93.9	94.3	0.67	0.78	0.82	103
75	100	315S/M	6.7	72.69	2.1	2.4	3.44737	20/44	725	69	985	93.7	94.4	94.5	0.72	0.81	0.84	136
90	125	315S/M	6.5	90.86	2.2	2.4	4.02193	16/35	1030	69	985	94	94.8	94.8	0.71	0.8	0.83	165
110	150	315S/M	6.5	109.04	2.2	2.4	5.28596	18/40	1165	69	985	94.5	95.1	95.1	0.69	0.79	0.84	199
132	175	355M/L	6.1	126.57	1.9	2.2	9.05472	90/198	1700	73	990	94.3	95.5	95.8	0.67	0.77	0.81	246
160	220	355M/L	6	159.11	1.9	2.1	9.53128	76/167	1800	73	990	94.2	95.8	96	0.65	0.77	0.81	297
200	270	355M/L	6.1	195.27	2.2	2.3	12.39067	85/187	1910	73	990	94.7	95.5	95.7	0.66	0.76	0.81	372
250	340	355M/L	6.1	245.9	1.9	2.1	14.77349	64/141	2185	73	990	95	96	96.2	0.69	0.78	0.81	463
280	380	355M/L*	6	274.83	2.1	2.2	14.77349	54/119	2185	73	990	94.7	95.7	96	0.68	0.77	0.8	526
VIII Pole - 750 rpm																		
2.2	3	132S	3.03	5.3	2.1	2.3	0.0552	19/42	81.8	48	710	79	79.9	80	0.51	0.64	0.72	5.51
3	4	132M	4.03	5.9	2.5	2.6	0.07527	16/35	94.8	48	710	79.5	82.5	83	0.52	0.64	0.72	7.25
4	5.5	160M	5.43	5.2	2.2	2.8	0.12209	27/59	144.3	51	725	83	85.8	86.6	0.44	0.57	0.66	10.1
5.5	7.5	160M	7.36	5.2	2.3	2.7	0.14364	23/51	157	51	730	82.2	85	86	0.44	0.58	0.68	13.6
7.5	10	160L	9.88	4.9	2	2.5	0.16518	15/33	166	51	725	84.5	86.7	86.5	0.5	0.62	0.71	17.6
9.2	12.5	180M	12.34	7	2.2	2.7	0.262	12/26	207	51	725	87.5	88.3	88.5	0.67	0.77	0.83	18.1
11	15	180L	14.81	7	2.2	2.4	0.26201	9/20	216.8	51	725	88	89	89	0.68	0.78	0.83	21.5
15	20	200L	19.62	5	2	2.2	0.50227	28/62	325	53	730	89.5	90.8	91.5	0.53	0.65	0.71	33.3
18.5	25	225S/M	24.52	7.2	2.1	2.6	0.84722	18/40	393	56	730	90.5	91.5	91.9	0.69	0.79	0.83	35
22	30	225S/M	29.42	7.5	2.2	3	0.98842	18/40	365	56	730	90.8	92.2	92.5	0.67	0.77	0.82	41.9
30	40	250S/M	39.23	7.5	2.1	2.8	1.22377	17/37	485	56	730	91.7	92.5	93	0.69	0.79	0.83	56.1
37	50	280S/M	48.38	6.5	1.9	2.2	2.64298	32/70	765	59	740	92.6	93.5	93.9	0.63	0.74	0.8	71.1
45	60	280S/M	58.05	6.5	2	2.4	3.10263	32/70	825	59	740	92.9	93.7	94	0.62	0.73	0.79	87.5
55	75	315S/M	72.57	6.5	2	2.2	3.44737	32/70	870	62	740	93.5	94.5	94.5	0.63	0.74	0.8	105
75	100	315S/M	96.76	6.6	1.9	2.2	4.36666	20/44	1062	62	740	93.9	94.7	94.9	0.66	0.78	0.81	141
90	125	315S/M	120.95	6.8	1.9	2.4	5.28596	23/51	1220	62	740	93.9	94.7	95	0.67	0.77	0.81	169
110	150	355M/L	145.14	6.4	1.5	2.2	12.56043	41/90	1430	70	740	93.5	95.2	95.2	0.62	0.73	0.79	211
132	175	355M/L	169.32	6.5	1.6	2.2	13.18845	47/103	1800	70	740	94	95.4	95.4	0.63	0.73	0.79	253
160	220	355M/L	212.86	6.6	1.6	2.2	16.32856	42/92	1910	70	740	94.3	95.7	95.7	0.62	0.74	0.79	305
200	270	355M/L	261.24	6.8	1.6	2.1	19.46866	37/81	2185	70	740	94.2	95.1	95.5	0.58	0.71	0.78	388
HIGH OUTPUT DESIGN																		
55	75	280S/M	72.57	6.5	2	2.2	3.44737	32/70	855	62	740	93.5	94.5	94.5	0.63	0.74	0.8	105

Notes:
**Class "F" insulation with ΔT105K*
Standard voltage, connection and frequency: 220-240V Δ 50Hz 380-415V Δ 50Hz
380-415V Y 50Hz 660-690V Y 50Hz
The values shown are subject to change without prior notice. To obtain guaranteed values please access our website.

Ex d / Ex de - Explosion Proof Motors - Cast Iron Frame
Premium Efficiency EFF1

Output		380 V								415 V							
		Rated speed (rpm)	% of full load						Full load current I_n (A)	Rated speed (rpm)	% of full load						Full load current I_n (A)
			Efficiency η			Power Factor (Cos φ)					Efficiency η			Power Factor (Cos φ)			
kW	HP		50	75	100	50	75	100			50	75	100	50	75	100	
VI Pole - 1000 rpm																	
3	4	955	83	85.2	86	0.57	0.69	0.76	6.97	965	81	84.8	86.5	0.5	0.64	0.72	6.7
4	5.5	955	85.7	86.8	87	0.6	0.72	0.78	8.96	965	84.3	86.4	87.2	0.52	0.66	0.74	8.62
5.5	7.5	955	85.5	87	86.5	0.56	0.7	0.76	12.7	965	83.5	86.4	86.9	0.51	0.64	0.73	12.1
7.5	10	965	88	89.7	89.9	0.65	0.77	0.82	15.5	975	87	89.3	90	0.58	0.71	0.79	14.7
9.2	12.5	970	90	90.3	90	0.64	0.75	0.81	19.2	975	88.7	89.9	90	0.55	0.71	0.79	18
11	15	970	89.5	90.5	90.2	0.62	0.76	0.81	22.9	975	88.5	90	90.3	0.54	0.68	0.76	22.3
15	20	970	91.4	91.8	91.4	0.75	0.83	0.89	28	975	91	91.8	91.6	0.7	0.8	0.85	26.8
18.5	25	970	91.8	92.6	92.7	0.72	0.81	0.84	36.1	980	90.8	92.6	92.9	0.64	0.75	0.8	34.6
22	30	970	92	92.9	92.9	0.7	0.78	0.84	42.8	980	90.4	92.2	92.9	0.6	0.72	0.8	41.2
30	40	980	92	93	93.4	0.76	0.84	0.86	56.7	985	91.4	93	93.5	0.7	0.79	0.84	53.1
37	50	980	92	94	93.9	0.75	0.83	0.86	69.6	985	91.6	94	94	0.69	0.79	0.82	66.8
45	60	985	92.5	93.7	94.1	0.71	0.79	0.84	86.5	985	91.5	93.5	94.1	0.64	0.75	0.8	83.2
55	75	985	92.8	93.9	94.2	0.71	0.8	0.83	107	985	92.2	93.9	94.2	0.64	0.75	0.81	100
75	100	985	94	94.4	94.4	0.75	0.83	0.85	142	985	93.4	94.4	94.5	0.69	0.79	0.83	133
90	125	985	94.3	94.8	94.7	0.74	0.82	0.84	172	985	93.7	94.8	94.8	0.68	0.78	0.82	161
110	150	985	94.7	95	95	0.73	0.81	0.85	207	985	94.3	95.1	95.2	0.66	0.77	0.83	194
132	175	990	94.5	95.5	95.7	0.72	0.79	0.82	256	990	94.1	95.5	95.8	0.64	0.75	0.8	240
160	220	990	94.5	95.9	96	0.7	0.8	0.82	309	990	93.9	95.8	96	0.6	0.74	0.8	290
200	270	990	95	95.6	95.7	0.7	0.79	0.82	387	990	94.4	95.4	95.7	0.62	0.73	0.79	368
250	340	990	95.3	96	96.1	0.73	0.8	0.82	482	990	94.7	95.9	96.2	0.66	0.76	0.8	452
280	380	985	95	95.8	96	0.73	0.8	0.81	547	990	94.4	95.5	96	0.64	0.74	0.79	514
VIII Pole - 750 rpm																	
2.2	3	700	79.5	80	79.5	0.56	0.68	0.75	5.61	715	78.5	79.8	80.1	0.48	0.61	0.7	5.46
3	4	700	80.5	83	82.5	0.54	0.66	0.74	7.47	715	78.5	82	83	0.5	0.62	0.7	7.18
4	5.5	725	84	86.2	86.6	0.48	0.61	0.7	10	730	82	85.4	86.6	0.41	0.53	0.63	10.2
5.5	7.5	725	83.2	85.5	86	0.48	0.62	0.71	13.7	730	81.2	84.5	86	0.4	0.54	0.65	13.7
7.5	10	720	85.5	87	86.3	0.53	0.65	0.73	18.1	730	83.5	86.5	86.5	0.47	0.59	0.69	17.5
9.2	12.5	725	87.8	88.3	88	0.71	0.81	0.85	18.7	730	87.2	88.3	88.6	0.63	0.75	0.81	17.8
11	15	725	88.2	89	88.8	0.73	0.81	0.85	22.1	730	87.8	89	89	0.65	0.75	0.81	21.2
15	20	730	90	91	91.2	0.56	0.67	0.73	34.2	735	89	90.6	91.3	0.5	0.63	0.69	33.1
18.5	25	725	90.8	91.5	91.5	0.73	0.81	0.84	36.6	730	90.2	91.5	91.9	0.65	0.77	0.82	34.2
22	30	730	91.1	92.2	92.2	0.71	0.8	0.83	43.7	735	90.5	92.1	92.5	0.63	0.74	0.81	40.8
30	40	725	92	92.5	92.6	0.73	0.81	0.84	58.6	730	91.3	92.5	93	0.65	0.77	0.82	54.7
37	50	735	92.9	93.5	93.8	0.68	0.76	0.81	74	740	92.1	93.4	93.8	0.6	0.72	0.79	69.5
45	60	735	93.3	93.9	94	0.66	0.77	0.81	89.8	740	92.5	93.5	94.1	0.58	0.7	0.77	86.4
55	75	735	93.8	94.5	94.4	0.69	0.78	0.81	109	740	93.1	94.5	94.6	0.61	0.73	0.79	102
75	100	735	94.1	94.7	94.8	0.69	0.8	0.82	147	740	93.7	94.7	94.9	0.63	0.76	0.8	137
90	125	735	94.2	94.8	95	0.71	0.79	0.83	173	740	93.6	94.6	95.1	0.63	0.75	0.8	165
110	150	740	94	95.2	95.1	0.65	0.76	0.81	217	745	93	95.2	95.2	0.59	0.77	0.77	209
132	175	740	94.5	95.4	95.3	0.66	0.75	0.81	260	745	93.5	95.4	95.4	0.6	0.71	0.77	250
160	220	740	94.8	95.7	95.5	0.66	0.76	0.8	318	745	93.8	95.7	95.7	0.58	0.71	0.78	298
200	270	740	94.4	95.2	95.4	0.63	0.74	0.8	398	745	94	95	95.5	0.54	0.68	0.76	383
HIGH OUTPUT DESIGN																	
55	75	735	93.8	94.5	94.4	0.69	0.78	0.81	109	740	93.1	94.5	94.6	0.61	0.73	0.79	102

Ex d / Ex de - Explosion Proof Motors - Cast Iron Frame
Two speed - Premium Efficiency EFF1

Constant torque IV/II Pole - Dahlander Winding

Output		IEC Frame	Full load torque C_n (Nm)	Locked rotor current I_l/I_n	Locked rotor torque T_l/T_n	Break-down torque T_b/T_n	Inertia J kgm²	Allowable locked rotor time Hot/Cold (s)	Weight (kg)	Sound dB (A)	Rated speed (rpm)	400 V						Full load current I_n (A)
												% of full load						
												Efficiency η			Power Factor (Cos φ)			
kW	HP											50	75	100	50	75	100	
IV/II Pole - 1500/3000 rpm																		
0.7	0.95	90S	0.48	5.2	1.8	2	0.00392	10/22	29.5	49	1405	68.4	72.2	71.2	0.56	0.7	0.81	1.752
0.85	1.15		0.29	5	2.1	2.3		10/22		64	2800	60.9	66.3	66.8	0.69	0.8	0.87	2.111
1.1	1.5	90L	0.77	5	2.1	2.2	0.00504	7/15	32	49	1400	71	73.5	74	0.66	0.78	0.84	2.55
1.4	1.9		0.49	6	2.2	2.2		6/13		64	2750	68	72	73	0.7	0.81	0.9	3.08
1.5	2	100L	1	7.2	2.6	3	0.00842	16/35	45.6	53	1435	80	82	81.5	0.61	0.74	0.81	3.28
1.9	2.6		0.64	8.5	2.7	3.1		9/20		67	2890	74	78	79	0.75	0.84	0.89	3.9
2	2.7	100L	1.37	6.5	2.2	2.5	0.00842	12/26	45.6	53	1415	80	81.5	81	0.67	0.79	0.84	4.243
2.4	3.3		0.82	7.9	2.5	2.7		7/15		67	2870	74	78	79	0.73	0.84	0.9	4.872
2.6	3.5	112M	1.74	6.5	2.1	2.3	0.01607	11/24	60	56	1440	80.5	81.5	82	0.69	0.8	0.85	5.384
3.1	4.2		1.04	8	2.2	2.5		6/13		64	2890	74	78.5	81.5	0.73	0.84	0.89	6.169
3.7	5	132S	2.45	7	1.9	2.3	0.04264	10/22	85.4	60	1460	84	85	84.5	0.74	0.84	0.89	7.101
4.4	5.9		1.45	7.5	2.4	2.8		7/15		68	2910	76.5	80	80.5	0.81	0.89	0.92	8.575
4.9	6.6	132M	3.26	6.5	1.7	2	0.04264	8/18	88	60	1450	82	83	83	0.78	0.86	0.89	9.57
5.9	7.9		1.96	6.5	2	2.3		6/13		68	2890	77.5	78.5	79	0.82	0.89	0.92	11.7
6.8	9.2	160M	4.51	5.6	2	2.3	0.08028	20/44	144.8	67	1460	84.5	86.5	86.7	0.67	0.78	0.83	13.639
8	11		2.69	7.1	2.4	2.8		10/22		70	2930	78	82	82.5	0.74	0.83	0.88	15.905
9.5	12.9	160M	6.35	5	1.9	2.1	0.09034	15/33	151.5	67	1455	87	88	87	0.69	0.79	0.83	18.989
11	15		3.68	6.5	2.3	2.9		7/15		70	2920	82	83	84	0.74	0.83	0.88	21.479
12	16.3	160L	8.02	5.1	1.9	2.1	0.11041	12/26	169	67	1455	88	89	88	0.69	0.79	0.83	23.714
15	20		4.9	6.5	2.3	2.8		6/13		70	2920	83	84.5	85.5	0.75	0.85	0.89	28.452
15	20	180M	9.77	6.7	2.5	2.7	0.1794	10/22	217.7	64	1465	89	90	89.5	0.68	0.79	0.83	29.145
18	24.5		5.98	8.3	2.7	3		6/13		70	2935	85.5	88	88	0.71	0.82	0.87	33.935
18	24.5	180L	11.97	7	2.6	2.6	0.21528	10/22	230	64	1465	89.5	90.5	90	0.69	0.79	0.83	34.78
21.5	29		7.07	8.9	2.8	3		6/13		70	2935	86.5	88.5	89	0.73	0.83	0.88	39.623
26	35	200L	16.99	6.2	2	2.2	0.35853	22/48	310	69	1475	89	90	90.5	0.69	0.79	0.84	49.4
33	45		10.92	8	2.2	2.5		8/18		74	2950	85.5	88	88.8	0.83	0.89	0.91	58.9
32	43.5	225S/M	21.04	8.1	2.6	3.3	0.69987	11/24	410	70	1480	89	90.1	90.6	0.76	0.83	0.88	57.9
38	52		12.58	8.7	2.6	3.3		8/18		82	2960	84.6	87.3	88.5	0.83	0.87	0.89	69.6
38	52	225S/M	25.16	7.8	2.3	2.6	0.76985	12/26	430	70	1480	89	90.4	91	0.75	0.83	0.88	68.5
45	60		14.51	8.3	2.5	2.8		7/15		82	2960	85	87.9	89	0.77	0.84	0.87	83.9
46	63	250S/M	30.69	8	2.3	2.6	0.97981	7/15	510	70	1470	89.2	90.8	91.4	0.76	0.83	0.88	82.5
55	75		18.27	8.6	2.2	2.8		6/13		82	2940	85.5	88.4	89.5	0.82	0.87	0.9	98.6
63	86	280S/M	41.61	6.8	2	2.5	2.16799	30/66	841	76	1480	92	92.5	93	0.8	0.86	0.88	111
75	100		24.11	8.4	1.9	2.8		16/35		83	2970	87.5	89.5	90.5	0.82	0.88	0.9	133
73	99	280S/M	48.22	6.6	1.7	1.9	2.32858	12/26	870	76	1470	92	93	93	0.83	0.87	0.88	129
87	118		28.64	8	1.9	2.1		8/18		83	2950	89	90.5	91	0.88	0.91	0.92	150
85	115	315S/M	55.82	7	1.9	1.9	2.81036	11/24	1036	77	1475	92.5	93	93.2	0.77	0.84	0.86	153
100	136		32.9	8.5	2.1	2.4		7/15		84	2960	90	91	91.5	0.89	0.92	0.93	170
100	136	315S/M	65.79	5.7	1.9	1.9	3.77391	14/31	1190	77	1480	92	93	93.5	0.8	0.85	0.86	180
120	160		38.64	8.5	2.4	2.7		8/18		84	2965	91	92	93	0.89	0.91	0.92	202

Notes:
- The motors can also operate at 60Hz supply. The change in performance data can be obtained directly from the local WEG distributor.
- The values shown herewith are subjected to change without prior notice.
I_l / I_n = Locked rotor current
T_l / T_n = Locked rotor torque
I_n = Full load current

Ex d / Ex de - Explosion Proof Motors - Cast Iron Frame
Two speed - Premium Efficiency EFF1

Constant torque VIII/IV Pole - Dahlander Winding

Output		IEC Frame	Full load torque C_n (Nm)	Locked rotor current I_l/I_n	Locked rotor torque T_l/T_n	Break-down torque T_b/T_n	Inertia J kgm²	Allowable locked rotor time Hot/Cold (s)	Weight (kg)	Sound dB (A)	Rated speed (rpm)	400 V						Full load current I_n (A)
												% of full load						
												Efficiency η			Power Factor (Cos φ)			
kW	HP											50	75	100	50	75	100	
VIII / IV Pole - 750/1500 rpm																		
0.27	0.37	90S	0.38	2.5	1.7	1.7	0.0042	35/77	31.6	43	690	43.2	50.2	52.1	0.45	0.55	0.65	1.15
0.4	0.55		0.28	4.5	1.6	1.9		35/77		49	1395	70.5	72	71.5	0.67	0.79	0.85	0.95
0.4	0.55	90L	0.56	3.2	2	2	0.00504	13/29	32	43	700	40	50	53	0.42	0.52	0.6	1.82
0.7	0.95		0.49	5	1.8	2		8/18		49	1400	71.5	73	73	0.68	0.8	0.86	1.61
0.52	0.7	100L	0.72	3.7	2.8	2.7	0.00766	30/66	43.1	50	700	46.8	55.3	59.3	0.35	0.44	0.53	2.38
0.9	1.22		0.62	5.9	1.8	2.4		30/66		53	1420	77	79.3	78.6	0.69	0.81	0.86	1.92
0.7	0.95	100L	0.96	4.2	1.9	2.2	0.01121	13/29	43.1	50	710	60	66	68	0.42	0.53	0.64	2.32
1.1	1.5		0.75	5.8	2	2.4		6/13		53	1440	71	75	75	0.61	0.74	0.82	2.58
1.1	1.5	100L	1.53	4.2	1.9	2.3	0.01289	12/26	46	50	700	62	67	68.5	0.44	0.56	0.66	3.51
1.8	2.45		1.23	5.5	2.1	2.4		6/13		53	1430	70	75	75	0.64	0.75	0.82	4.22
1.5	2	112M	2.03	4.7	2.9	2.2	0.02244	20/44	62	46	705	67	71.9	72.9	0.43	0.55	0.65	4.569
2.5	3.4		1.72	6.6	2.3	2.2		15/33		56	1415	80	81	80	0.74	0.84	0.89	5.068
1.9	2.6	132M	2.59	6.3	2.6	2.6	0.07527	7/15	97	48	720	70	74.5	76	0.44	0.57	0.67	5.39
3.7	5		2.5	7	2.4	2.4		6/13		60	1430	79.2	80.1	82	0.78	0.87	0.9	7.24
3.3	4.5	160M	4.41	5.2	2.1	2.7	0.12208	20/44	144.7	51	730	76.5	80.5	81.5	0.45	0.58	0.68	8.595
5.5	7.5		3.68	7	2	2.7		12/26		67	1460	84	85	85.2	0.8	0.88	0.91	10.23
3.7	5	160M	4.9	5.4	2.3	2.8	0.12927	10/22	146	51	730	72.5	77.5	79.5	0.43	0.55	0.65	10.3
7	9.5		4.69	6.5	2.2	2.6		6/13		67	1450	83.5	84.2	84.5	0.79	0.87	0.9	13.3
5.5	7.5	160M	7.46	5	2.1	2.4	0.14364	15/33	151	51	720	74	77.5	79.6	0.48	0.6	0.7	14.2
8.8	12		5.93	6.5	2.1	2.4		7/15		67	1450	83.2	84.3	84.5	0.79	0.86	0.88	17.1
7	9.5	160L	9.38	5	2.3	2.4	0.16518	12/26	166	51	725	75	79.5	80.5	0.46	0.58	0.68	18.5
11	15		7.38	6.5	2.2	2.6		6/13		67	1455	84	85	85	0.77	0.86	0.89	21
11	15	180L	14.71	7.3	2.3	2.5	0.30337	6/13	216.8	51	730	82	82.6	84	0.5	0.63	0.7	27
18	24.5		12.02	8.5	2.2	2.4		6/13		64	1460	85.8	86.3	87	0.81	0.88	0.9	33.2
17	23	200L	22.41	4.5	2	2.2	0.50227	26/57	325	53	735	84.5	86.5	87.2	0.54	0.67	0.74	38
27	37		18.08	6	2	2.4		10/22		69	1465	88	89	89.5	0.85	0.89	0.91	47.8
22	30	225S/M	29.42	7.5	2	2.3	1.22377	9/20	465	56	730	86.5	87.5	88	0.65	0.76	0.82	44
32	43.5		21.26	8.5	2	2.5		6/13		70	1465	87.5	88.5	89	0.89	0.93	0.94	55.2
26	35	250S/M	34.57	7.5	2	2.3	1.36497	7/15	511	56	725	86.2	87.3	88	0.67	0.78	0.82	52
37	50		24.69	8.8	2	2.3		6/13		70	1450	87.2	88.1	88.7	0.85	0.89	0.91	66.2
33	45	250S/M	44.14	7.2	1.9	2.2	1.55324	6/13	540	56	730	87	88.3	89	0.67	0.78	0.82	65.3
47	64		31.39	9	2.2	2.4		6/13		70	1460	87.5	88.4	90	0.86	0.9	0.92	81.9
38	52	280S/M	50.31	5	1.8	2.2	3.33245	25/55	865	59	740	87.8	89.5	90.5	0.53	0.63	0.69	87.8
56	76		36.64	7	1.8	2.2		12/26		76	1485	89.5	90.5	91	0.83	0.86	0.88	101
46	63	280S/M	61.37	4.5	1.7	2	2.5692	30/66	885	59	735	89	90	90.2	0.53	0.63	0.7	105
67	91		43.88	7	2	2.2		15/33		76	1485	90.5	91.4	91.8	0.84	0.88	0.89	118
56	76	315S/M	74.04	5.5	1.8	2.1	3.21158	25/55	1050	62	735	89.5	90.5	91	0.58	0.7	0.75	118
83	113		54.67	7.2	2	2.5		11/24		77	1480	90.5	91.5	92	0.84	0.88	0.9	145
78	106	315S/M	102.56	7	1.8	2.2	5.28596	10/22	1150	62	740	88.6	90.6	91.1	0.64	0.74	0.78	158
115	156		75.22	8.4	2	2.3		6/13		77	1485	88	90	91.2	0.88	0.9	0.92	198

Ex d / Ex de - Explosion Proof Motors - Cast Iron Frame
Two speed - Premium Efficiency EFF1

Constant torque IV/II Pole - Independent Winding

Output		IEC Frame	Full load torque C_n (Nm)	Locked rotor current I_l/I_n	Locked rotor torque T_l/T_n	Break-down torque T_b/T_n	Inertia J kgm²	Allowable locked rotor time Hot/Cold (s)	Weight (kg)	Sound dB (A)	Rated speed (rpm)	400 V						Full load current I_n (A)
												% of full load						
												Efficiency η			Power Factor (Cos φ)			
kW	HP											50	75	100	50	75	100	
VI/IV Pole - 1000/1500 rpm																		
0.26	0.36	90S	0.27	3.8	2.4	3.2	0.0042	12/26	30	45	965	40	50	55	0.37	0.46	0.54	1.26
0.4	0.55		0.27	5	1.7	2.5		8/18		49	1440	53	62	65	0.54	0.65	0.75	1.18
0.38	0.52	90L	0.38	6.2	2.4	3.3	0.0056	6/13	16	45	970	48	58	63.7	0.4	0.5	0.59	1.46
0.65	0.88		0.43	6.4	2	2.9		5/11		49	1460	61.5	68	72.3	0.52	0.64	0.74	1.75
0.55	0.75	100L	0.56	5	2	2.6	0.00766	12/26	40	44	965	58	65	67	0.45	0.57	0.67	1.77
0.9	1.22		0.61	6.5	2	2.5		6/13		53	1440	70	75	76	0.6	0.72	0.8	2.14
0.9	1.22	100L	0.92	4.7	2.2	2.4	0.01121	9/20	21	44	945	59	65	67.7	0.51	0.62	0.71	2.7
1.3	1.75		0.87	5.8	1.8	2.4		8/18		53	1440	69.5	72	72.4	0.61	0.72	0.81	3.2
1.1	1.5	112M	1.11	5.8	2.6	2.9	0.01339	9/20	25	48	965	61.5	68	71.5	0.44	0.57	0.67	3.31
1.7	2.3		1.12	6.7	2	3.4		5/11		56	1465	64.5	71	74	0.5	0.63	0.73	4.54
1.5	2	112M	1.49	6	2.6	2.8	0.01607	8/18	36	48	960	67	72	73.3	0.46	0.6	0.7	4.22
2.3	3.1		1.52	7	2.1	3.6		5/11		56	1465	67	73	76	0.5	0.63	0.73	5.98
1.8	2.45	132S	1.79	6.3	2.4	3.1	0.04265	9/20	68	52	980	62	69	72.5	0.43	0.54	0.63	5.69
2.7	3.7		1.81	7.2	2.2	2.5		12/26		60	1460	81.5	83.8	84.5	0.61	0.74	0.81	5.69
2	2.7	132M	1.96	6.2	2.8	3.2	0.05072	9/20	68	52	985	63	70	73	0.45	0.57	0.66	5.99
3.1	4.2		2.06	7.8	2.2	2.9		12/26		60	1460	82	84	84.2	0.64	0.75	0.83	6.4
2.8	3.8	160M	2.79	6	2	2.6	0.11492	11/24	79	56	975	77.2	80.3	80.7	0.59	0.72	0.8	6.26
4.3	5.8		2.83	7.5	2	2.9		6/13		67	1470	77	82	83	0.68	0.8	0.86	8.7
4.3	5.8	160L	4.26	5.5	2	2.6	0.11565	8/18	96	56	975	79	80	81	0.59	0.74	0.82	9.34
6.6	9		4.37	6.9	2	3		5/11		67	1475	76	80	82	0.6	0.75	0.84	13.8
5.7	7.7	160L	5.65	5.7	2	2.6	0.14456	7/15	127	56	975	80.5	81.5	82.6	0.6	0.75	0.83	12
8.7	11.8		5.75	6	1.9	3		6/13		67	1470	79.2	82.5	83.4	0.67	0.8	0.87	17.3
7.4	9.9	180M	7.23	6.7	1.7	2.5	0.27581	6/13	211.6	56	980	84.5	85	84.5	0.76	0.85	0.89	14.2
11.4	15.5		7.55	8.1	1.7	2.7		6/13		64	1470	86.5	87	87	0.85	0.91	0.93	20.3
9.5	13	180L	9.5	8.4	2.5	2.9	0.30532	5/11	179	56	980	86	86.5	87	0.78	0.86	0.87	18.1
14	19		9.25	8.6	2.1	3		5/11		64	1470	86.5	87	87.2	0.88	0.91	0.92	25.2
11	15	200M	10.9	7.5	2.9	3.2	0.40676	10/22	200	58	985	86	88	89	0.6	0.72	0.79	22.6
16.5	22.5		10.89	7.8	2.3	3.4		8/18		69	1480	84.5	87.5	88.5	0.65	0.76	0.83	32.4
13.2	18	200L	13.02	7.9	2.8	3	0.46939	6/13	280	58	990	88	89.5	90	0.6	0.72	0.79	26.8
20	27		13.06	8.3	2.6	2.8		5/11		69	1480	89	89.5	90	0.78	0.86	0.89	36
16	21.7	225S/M	15.69	7.2	2.8	2.9	0.76989	10/22	280	61	990	83	86	88	0.46	0.59	0.69	38
24	32.6		15.72	7.5	2.3	3		8/18		70	1485	88	89	89.5	0.71	0.81	0.86	45
21	28.5	225S/M	20.61	7	2.8	3	0.77479	7/15	379	61	990	84	87	88.3	0.55	0.68	0.78	44
31	42		20.18	7.7	2.5	3.3		7/15		70	1490	85	87.5	88.5	0.7	0.8	0.86	58.8
25	34	250S/M	24.59	7	2.9	3.2	0.91566	7/15	469	61	990	85	87	88	0.52	0.66	0.74	55.4
37	50		24.19	8.1	2.4	3.2		7/15		70	1480	90.5	91	91.5	0.76	0.85	0.88	66.3
32	43.5	250S/M	31.46	6.8	2.7	3.4	1.16219	6/13	520	61	990	86.3	88	89	0.57	0.69	0.77	67.4
47	64		30.86	8.6	2.6	3.4		7/15		70	1485	90	91.5	92	0.76	0.85	0.88	83.8
45	60	280S/M	43.18	7.1	2.9	2.4	2.58594	11/24	685	66	995	87	89	90	0.6	0.7	0.75	96.2
66	90		43.39	8.5	2.3	3		11/24		76	1485	89	91	92	0.72	0.82	0.86	120
54	73	280S/M	52.8	7.1	3	2.5	3.07081	14/31	810	66	990	89	90.3	91	0.58	0.7	0.75	114
80	109		52.55	8.4	2.6	3.1		10/22		76	1485	91	92.2	92.5	0.71	0.81	0.86	145
62	84	315S/M	60.75	7.7	3	3.3	3.39405	11/24	898	69	990	85	88.5	90	0.56	0.67	0.72	138
92	126		60.75	8.5	2.8	2.9		9/20		77	1485	88	90.5	91.5	0.8	0.86	0.87	169
75	100	315S/M*	72.32	7	2.9	2.8	3.79811	5/11	1005	69	990	86	89	90	0.6	0.69	0.75	160
110	150		72.57	6.6	2.2	2.4		5/11		77	1480	89	91	92	0.81	0.86	0.88	196

Notes:
- The motors can also operate at 60Hz supply. The change in performance data can be obtained directly from the local WEG distributor.
- The values shown herewith are subjected to change without prior notice.
I_l / I_n = Locked rotor current
T_l / T_n = Locked rotor torque
I_n = Full load current

Ex d / Ex de - Explosion Proof Motors - Cast Iron Frame
Two speed - Premium Efficiency EFF1

Variable torque IV/II Pole - Dahlander Winding

Output		IEC Frame	Full load torque C_n (Nm)	Locked rotor current I_l/I_n	Locked rotor torque T_l/T_n	Break-down torque T_b/T_n	Inertia J kgm²	Allowable locked rotor time Hot/Cold (s)	Weight (kg)	Sound dB (A)	Rated speed (rpm)	400 V						Full load current I_n (A)
												% of full load						
												Efficiency η			Power Factor (Cos φ)			
kW	HP											50	75	100	50	75	100	
IV/II Pole - 1500/3000 rpm																		
0.37	0.5	90L	4.5	0.25	2	2.1	0.00476	18/40	20	49	1435	62.3	67.4	68.8	0.45	0.54	0.62	1.25
1.5	2		6.5	0.49	2.5	3		6/13		64	2900	68	75	76.4	0.62	0.73	0.8	3.54
0.65	0.88	100L	4.5	0.44	2.1	2.2	0.00765	22/48	30	53	1435	72	76.5	77.5	0.56	0.67	0.73	1.66
2.5	3.4		6.5	0.84	2.3	2.8		6/13		67	2890	78	80	81	0.7	0.81	0.86	5.18
1.1	1.5	132S	5	0.73	2.1	3	0.01741	60/132	43	60	1470	69	75	78	0.5	0.6	0.69	2.95
4.4	5.9		9	1.44	2.8	3.3		7/15		68	2940	78.5	82.5	84	0.7	0.81	0.87	8.69
3	4	160M	6	1.95	2	2.4	0.05294	28/62	118	67	1470	80	83	84	0.5	0.63	0.71	7.26
12	16		8.5	3.88	2.5	2.9		6/13		70	2950	83	85	86	0.71	0.81	0.87	23.1
5.5	7.5	180M	4.7	3.67	1.6	2.7	0.11352	40/88	160	64	1465	84.5	87	87	0.54	0.65	0.72	12.7
20	27.2		9.2	6.59	2.7	3.5		6/13		70	2955	87.5	89.5	90	0.76	0.84	0.89	36
6.3	8.6	180L	4.7	4.2	1.6	2.4	0.21527	35/77	180	64	1465	86.5	88	88.5	0.54	0.65	0.72	14.3
25	34		8.9	8.25	2.7	3.4		6/13		70	2950	90	90.7	91	0.76	0.85	0.89	44.6
8.5	11.5	200L	4.2	5.6	2	2	0.22426	50/110	242	69	1470	88.5	89.5	90	0.58	0.69	0.74	18.4
33	44.8		8.2	10.84	3.2	2.8		10/22		74	2960	89.5	91	91.2	0.8	0.87	0.89	58.7
9	12.2	225S/M	6.1	5.88	2.3	2.6	0.39467	28/62	366	70	1485	85	88	88.5	0.55	0.65	0.72	20.4
37	50		8.7	12.05	2.6	3		6/13		82	2970	88.5	90	90.5	0.81	0.87	0.9	65.6
12	16.3	225S/M	6.3	7.94	2.2	2.4	0.76985	23/51	385	70	1470	86	87	88.2	0.57	0.67	0.73	26.9
46	63		8.8	15.24	2.4	2.8		6/13		82	2960	85	88	90.6	0.76	0.84	0.9	81.4
15	20	250S/M	5.2	9.68	1.9	2.2	1.08479	32/70	450	70	1480	88.5	89.7	90.5	0.64	0.73	0.76	31.5
55	75		8.5	18.08	2.3	2.7		6/13		82	2970	89.8	90.8	91	0.85	0.89	0.91	95.9
20	27	280S/M	5.5	13.15	2	2.1	2.16799	60/132	705	76	1470	89.3	91	91.8	0.56	0.66	0.72	43.7
75	100		8.8	24.11	2.5	2.7		7/15		83	2970	89.5	91.2	92	0.72	0.8	0.84	140
24	32.6	280S/M	5.5	15.72	2	2.1	2.40888	55/121	775	76	1485	89.2	90.9	91.8	0.56	0.66	0.72	52.4
90	125		9	30.03	2.5	3.3		11/24		83	2980	89.8	91.4	92.3	0.78	0.85	0.88	160
27	37	315S/M	5.4	18.02	2	2	3.21184	62/136	820	77	1470	89.3	91	92	0.57	0.67	0.72	58.8
110	150		9	36.16	2.6	2.7		7/15		84	2970	90	91.9	92.8	0.73	0.82	0.85	201
33	45	315S/M	6	21.92	2	2.1	3.61332	50/110	865	77	1470	89.4	91.2	92.5	0.57	0.67	0.71	72.5
132	180		9.3	43.32	2.5	2.8		6/13		84	2975	90.3	92.4	93.3	0.75	0.82	0.86	237

Variable torque IV/II Pole - Dahlander Winding

Output		IEC Frame	Full load torque C_n (Nm)	Locked rotor current I_l/I_n	Locked rotor torque T_l/T_n	Break-down torque T_b/T_n	Inertia J kgm²	Allowable locked rotor time Hot/Cold (s)	Weight (kg)	Sound dB (A)	Rated speed (rpm)	400 V						Full load current I_n (A)
												% of full load						
												Efficiency η			Power Factor (Cos φ)			
kW	HP											50	75	100	50	75	100	
VIII/IV Pole - 750/1500 rpm																		
1.8	2.45	160M	2.4	5.2	2.1	2.8	0.12208	30/66	110	51	730	75.8	80	81.2	0.46	0.58	0.67	4.776
7.2	9.8		4.77	8.5	2.5	3.6		7/15		67	1470	82	85	85.8	0.65	0.77	0.84	14.42
3	4	160L	3.95	4.3	1.7	2.1	0.14364	30/66	119	51	725	81	82	82.5	0.54	0.67	0.75	7
11	15		7.38	7	2.4	2.7		6/13		67	1455	84	85.5	86	0.71	0.83	0.88	21
4.3	5.8	180L	5.69	4	1.7	2	0.19734	20/44	162	51	730	80	83	84.2	0.39	0.5	0.58	12.7
17	23		11.16	8	2.4	2.8		7/15		64	1475	88.6	89.5	89.5	0.62	0.75	0.82	33.4
6.5	8.8	200L	8.57	3.6	1.9	2	0.38609	20/44	235	53	735	83.5	86.5	87	0.43	0.54	0.6	18
28	38		18.38	7.4	2.6	2.8		8/18		69	1480	90.5	91.5	91.5	0.71	0.81	0.85	52
9.2	12.5	225S/M	12.09	5.5	2.8	3.1	0.75686	18/40	360	56	740	81	85	87	0.43	0.53	0.6	25.4
37	50		24.11	9.5	3.1	4.2		6/13		70	1485	86.5	89	90	0.62	0.74	0.8	74.2
9.2	12.5	250S/M	12.09	5.5	2.8	3.1	0.75686	18/40	360	56	740	81	85	87	0.43	0.53	0.6	25.4
37	50		24.11	9.5	3.1	4.2		6/13		70	1485	86.5	89	90	0.62	0.74	0.8	74.2
11	15	225S/M	14.51	5	2.2	2.2	1.12963	20/44	425	56	740	83	86	87	0.47	0.58	0.67	27.2
44	59.7		28.88	8	2.4	3		8/18		70	1480	89	90.5	91	0.73	0.83	0.87	80.2
17	23	280S/M	22.25	4.2	1.5	1.6	3.33245	20/44	650	59	740	83.2	86.4	88.6	0.47	0.57	0.63	44
68	92.3		44.5	8	2.5	2.5		10/22		76	1485	85.1	89	90	0.76	0.83	0.86	127
20	27	280S/M	26.12	4.2	1.6	1.6	3.67719	20/44	690	59	740	83.9	87.3	89	0.46	0.57	0.61	53.2
80	109		52.55	8.6	2.7	2.8		10/22		76	1485	86.5	89	90.3	0.76	0.81	0.84	152
27	37	315S/M	35.8	4	1.7	1.7	4.82631	40/88	890	62	740	85	87	88.5	0.4	0.5	0.58	76
110	150		72.32	8.5	2.6	2.7		10/22		77	1485	88	90.2	91.3	0.69	0.78	0.82	212

Ex d / Ex de - Explosion Proof Motors - Cast Iron Frame

Mechanical Data

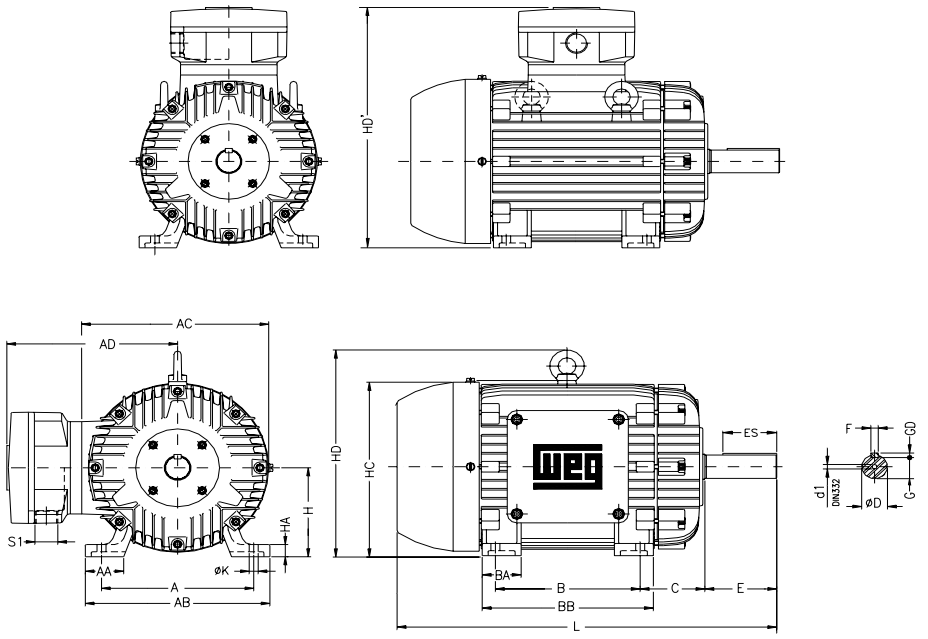

FRAME	A	AA	AB	AC	AD	B	BA	BB	C	SHAFT DIMENSIONS						HI	HA	HC	HD	IHD*	K	L	S1	d1	BEARINGS	
										D	E	ES	F	G	GD										D.E.	O.D.E.
90S	140	38	164	179	214	100	42	131	56	24j6	50	36	8	20	7	90	12	177	–	304	10	316	M25 x 1.5	DM8	6205-ZZ	6204-ZZ
90L						125		156														341				
100L	160	44	188	199	224	140	50	173	63	28j6	60	45		24		100	15	200		324	12	384		DM10	6206-ZZ	6205-ZZ
112M	190	48	220	223	243			193	70							112	17	237	222	355		394	M32 x 1.5		6307-ZZ	6206-ZZ
132S	216	51	248	270	271		55	188	89	38k6	80	63	10	33	8	132	19.5	282	330	403		451		DM12	6308-ZZ	6207-ZZ
132M						178		226														489				
160M	254	64	308	312	322	210	65	254	108	42k6	110	80	12	37		160	22	315	370	482	14.5	598	2 x M40 x 1.5	DM16	6309-C3	6209-Z-C3
160L						254		298														652				
180M	279	80	350	358	342	241	75	294	121	48k6			14	42.5	9	180	28	367	422	522		664			6311-C3	6211-Z-C3
180L						279		332														702				
200M	318	82	385	399	370	267	85	332	133	55m6			16	49	10	200	30	403	477	570	18.5	729	2 x M50 x 1.5	M20	6312-C3	6212-Z-C3
200L						305		370														767				
225S/M	356	60	436	472	413	286	105	391	149	55m6*		100				225	34	475	550	638		817			6314-C3 NU-322-C3	
						311				60m6	140	125	18	53	11							847				
250S/M	406	100	506				138	445	168	60m6*						250	42	500	575	663	24	923	2 x M63 x 1.5			
						349				65m6*				58												
280S/M	457		557	610	551	368	142	510	190	65m6*						280		600	693	831		1036			6316-C3	
						419				75m6			20	67.5	12											
315S/M	508	120	628		573	406	152	558	216	65m6*			18	58	11	315	52	640	728	888	28	1126			6314-C3	
						457				80m6	170	160	22	71	14							1156			6319-C3	6316-C3
355M/L	610	140	750	780	672	560	200	760	254	75m6*	140	125	20	67.5	12	355	60	755	864	1027		1399			6314-C3	
						630				100m6	210	200	18	90	16							1469		M24	6322-C3	6319-C3

** This data apply to EEx d - Explosion Multivoltage Motors / EEx de – Explosion Multivoltage Motors with Increased Safety terminal box – Improved Efficiency - EFF2, Premium Efficiency – EFF1.*

- *All the dimensions are in millimeters*
- *The data for frame 355M/L shown above are for horizontal mounting applications under standard coupling loads*
- *The customer must indicate when application is vertical or under special coupling loads*
- *Motors with second shaft end under request*
- *The values shown are subject to change without prior notice*

** Shaft dimensions for II pole motors, only for direct coupling*

Ex d / Ex de - Explosion Proof Motors - Cast Iron Frame

Mechanical Data

"FF" Flange

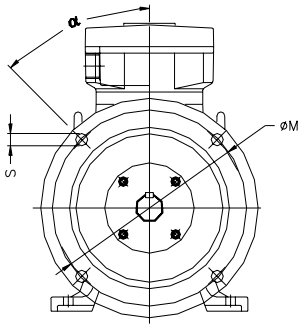

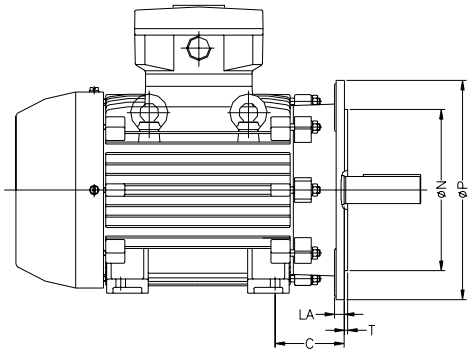

FRAME	"FF" FLANGE DIMENSIONS									n° of Holes
	Flange	C	LA	M	N	P	T	S	α	
90S/L	FF-165	56	10	165	130	200	3.5	12	45°	4
100L	FF-215	63	11	215	180	250	4	15		
112M		70								
132S/M	FF-265	89	12	265	230	300				
160M/L	FF-300	108	13	300	250	350	5	19		
180M/L		121	14							
200M/L	FF-350	133	18	350	300	400				
225S/M	FF-400	149		400	350	450			22°30'	8
250S/M	FF-500	168		500	450	550				
280S/M		190								
315S/M	FF-600	216	22	600	550	660	6	24		
355M/L	FF-740	254		740	680	800				

"C" Din Flange

FRAME	"C" DIN FLANGE DIMENSIONS							n° of Holes
	Flange	C	M	N	P	S	T	
90S/L	C-140	56	115	95	140	M8	3	4
100L	C-160	63	130	110	160		3.5	
112M		70						
132S/M	C-200	89	165	130	200	M10		

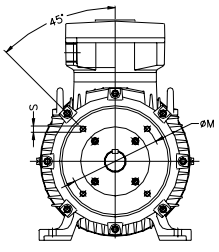

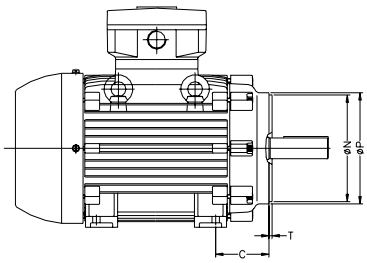

Ex d - Explosion Proof Multivoltage Motors With Brake - Cast Iron Frame Improved Efficiency EFF2

Standard Features:

- Three-phase, multivoltage, IP55, TEFC
- Output: 2.2 up to 18,5kW
- Frames: 132S up to 160L
- Voltage: 220-240/380-415V (up to 100L)
  380-415/660V (from 112M and up)
- Class “F” insulation (ΔT=80K)
- Continuous duty: S1
- Design N
- Class of temperature: T3 or T4
- Thermal protection:
  - Thermistors 130°C/T4 and 155°C/T3
  - Thermostat 140°C - brake
- Ambient temperature: 40°C, at 1000 m.a.s.l.
- Squirrel cage rotor/Aluminium die cast
- Reinforced set screws
- Internal DE and NDE bearing cap to prevent flame propagation
- Machined metal to metal surfaces between frame and terminal box
- Ground lug inside the terminal box
- Stainless steel nameplate identifying: standards, classification, temperature code and certification number
- Epoxy based painting plan 202
- Color: RAL 5010

Options Available:

- Degree of Protection: IP56 or IP66
- Bearing seals:
  - Lip seal
  - Oil seal
  - Labyrinth taconite seal and W3seal for frames 90S and above

More options available, on request

Typical Applications:

WEG explosion proof motors meet ATEX Directive 94/9/EC and are designed to operate in areas that require quick stop and/or time saving during operation in application that require explosion proof motors like:

- Machine tools
- Looms
- Packing machines
- Conveyor belts
- Wash and bottling machines
- Cranes

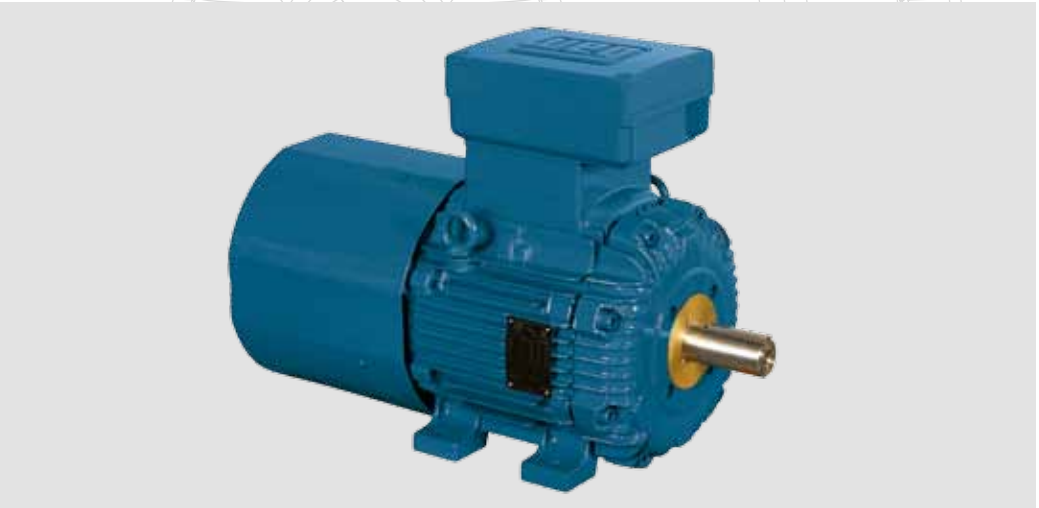

Fan Cover
Made of steel plate for frames 90 up to 132M and of cast iron for frames 160M and above. It offers a superior mechanical rigidity, corrosion-resistance and extended lifetime.
With a design incorporating the braking system, the fan cover guarantees proper fan cover to the upper brake allowing operation in severe environments. In addition, it offers quality and performance requirements of the motors such as noise level.

Terminal Box
Made of cast iron made with plenty of internal space. The terminal box can be rotated in 90° intervals, having one or two threaded holes to connect the power supply cables. Power supply connection components are certified, then reducing short-circuit inside the terminal box. The grounding system is placed inside and outside of the terminal box for improved safety. Suitable to take the additional connection of the brake as well as bridge rectifier which is fixed internally without affecting the motor degree of protection.
* Available as top or side mounted.

Bearings
WEG motors are fitted with the highest quality bearings selected from the best manufacturers in the world and designed to ensure long life of the motor even under heavy operating conditions.

Winding
The wire is enameled with class H. Supplied with patented WISE (WEG Insulation System Evolution), which allows three times longer motor lifetime designed to work in environments with excess of moisture and suitable for VFD application. The winding is designed to obtain the smallest Joule losses and temperature rise.

Rotor
High pressure die cast rotor dynamically balanced, thus reducing vibrations. Built with premium electrical grade steel lamination to improve efficiency.

Shaft
WEG uses SAE/AISI 1040/45 steel as standard, which provides high mechanical strength, preventing bending under load and minimizes fatigue which extends lifetime. Specially designed to withstand torques caused during motor acceleration and deceleration. It´s size is larger than the standard motor and, upon special design, motor can have second shaft end.

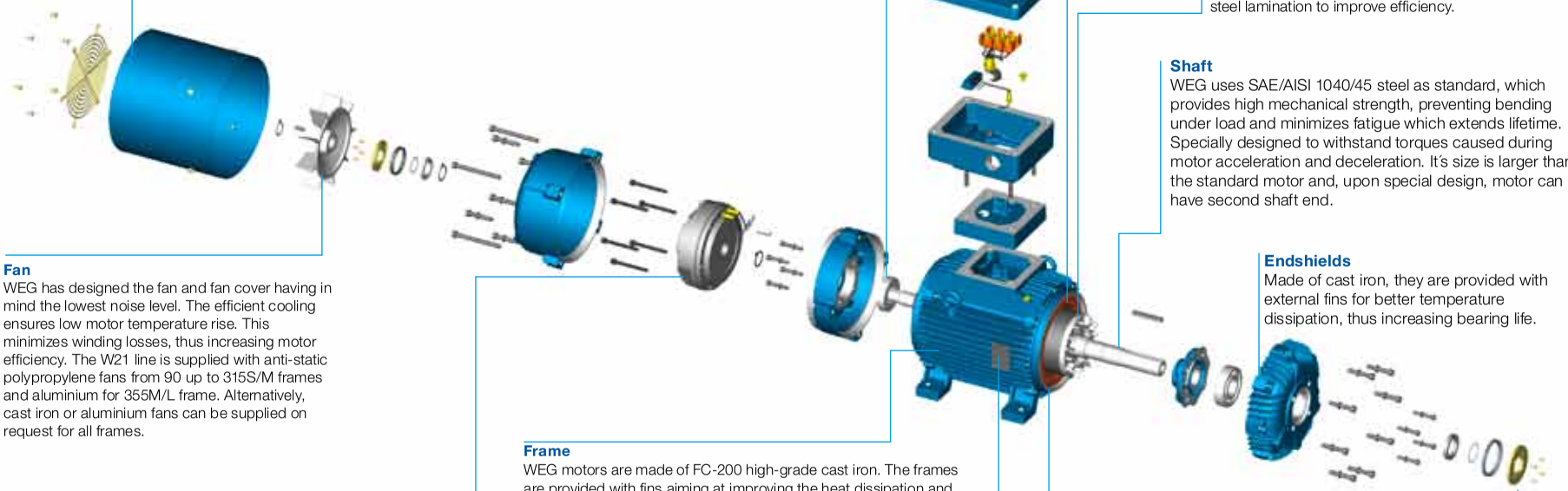

Fan
WEG has designed the fan and fan cover having in mind the lowest noise level. The efficient cooling ensures low motor temperature rise. This minimizes winding losses, thus increasing motor efficiency. The W21 line is supplied with anti-static polypropylene fans from 90 up to 315S/M frames and aluminium for 355M/L frame. Alternatively, cast iron or aluminium fans can be supplied on request for all frames.

Endshields
Made of cast iron, they are provided with external fins for better temperature dissipation, thus increasing bearing life.

Brake
The electromagnetic brake is of sturdy construction offering high performance for its low number of movable components and versatility on the application, resulting in extended lifetime and low maintenance. The possibility of having several torques and several power supply voltages makes this set a versatile component.

Frame
WEG motors are made of FC-200 high-grade cast iron. The frames are provided with fins aiming at improving the heat dissipation and adequately spaced to minimize air blockage due to build up of dirt. Motor designed to ensure that surface temperature is lower than ignition temperature of the gas that is present in the environment. Mechanical components are designed towithstand an explosion inside the motor without causing any risk to outside areas since there is no flame flame propagation through flame path. The motors can be mounted in any position, horizontal and vertical, withstanding the maximum axial and radial thrusts.

Stator
Built with premium electrical grade steel lamination to reduce electrical losses and operating temperature.

Seals
WEG Explosion Proof Motors are fitted with either Lip seal or Labyrinth Tachonite as standard (see standard features list) to provide the best possible protection.

Nameplate
Stainless steel nameplate ensuring a permanent record of all motor data.

W3Seal
Exclusive WEG sealing system (tachonite + v́ring + óring) guarantee maximum protection against the ingress of solid and liquid contaminating

Ex d - Explosion Proof Multivoltage Motors With Brake - Cast Iron Frame Improved Efficiency EFF2

Output		IEC Frame	Full load torque C_n (Nm)	Locked rotor current I_l/I_n	Locked rotor torque T_l/T_n	Break-down torque T_b/T_n	Inertia J kgm²	Allowable locked rotor time Hot/Cold (s)	Weight (kg)	Sound dB (A)	Rated speed (rpm)	400 V						Full load current I_n (A)
												% of full load						
												Efficiency η			Power Factor (Cos φ)			
kW	HP											50	75	100	50	75	100	
II Pole - 3000 rpm																		
5.5	7.5	132S	17.95	8	2.7	3.2	0.02056	18/40	68.5	68	2935	84	87.1	88.3	0.73	0.82	0.87	10.3
7.5	10	132S	24.05	7.3	2.4	2.9	0.02056	10/22	90.5	68	2920	86	87.5	88	0.76	0.84	0.88	14
9.2	12.5	160M	29.81	7.8	2.6	3.1	0.04706	12/26	116	70	2945	86.5	89	89.5	0.76	0.84	0.88	16.86
11	15	160M	35.78	8.3	2.6	3.1	0.04706	12/26	116	70	2945	87.8	90.1	90.3	0.77	0.85	0.88	20
15	20	160M	47.7	7.8	2.5	3.2	0.05295	10/22	123	70	2945	89.6	91.1	91.2	0.76	0.84	0.88	27
18.5	25	160L	59.63	8.2	2.6	3.3	0.06471	10/22	138	70	2945	90.4	91.9	91.7	0.75	0.84	0.88	33.1
IV Pole - 1500 rpm																		
5.5	7.5	132S	8	35.96	2.4	3	0.04264	10/22	90	60	1465	85.2	87.5	88	0.65	0.78	0.84	10.7
7.5	10	132M	8	47.95	2.5	2.8	0.05427	8/18	76	60	1465	86.4	88.4	88.6	0.7	0.8	0.86	14.2
9.2	12.5	160M	6.2	60.14	2.2	2.4	0.08029	16/35	122	67	1460	86	87.7	88.8	0.69	0.79	0.84	17.8
11	15	160M	6	72.41	2.3	2.5	0.08029	16/35	117	67	1455	87.6	89.4	89.9	0.7	0.79	0.84	21
15	20	160L	6	96.55	2.3	2.4	0.10539	13/29	133	67	1455	89	90.4	90.6	0.69	0.79	0.84	28.4
VI Pole - 1000 rpm																		
3	4	132S	29.27	5.3	2	2.2	0.03489	20/44	63	52	960	80	82.7	82.5	0.58	0.7	0.77	6.82
4	5.5	132M	40.24	6	2.1	2.3	0.05039	18/40	73	52	960	83.6	85.5	85.8	0.59	0.7	0.77	8.74
5.5	7.5	132M	54.87	6.4	2.3	2.4	0.06202	14/31	81	52	960	84	85.8	85.8	0.54	0.66	0.74	12.5
7.5	10	160M	72.41	6.1	2.3	2.6	0.12209	17/37	115	56	970	87	88.2	88	0.62	0.74	0.81	15.2
9.2	12.5	160L	90.51	6.5	2.3	2.8	0.14364	12/26	127	56	970	86.5	88	87.6	0.61	0.74	0.81	18.7
11	15	160L	108.62	6.6	2.4	2.9	0.17595	13/29	141	56	970	87.2	88.3	88.3	0.62	0.75	0.82	21.9
VIII Pole - 750 rpm																		
2.2	3	132S	29.68	5.3	2.1	2.3	0.0552	19/42	98	48	710	78.5	79.3	79.4	0.51	0.64	0.72	5.55
3	4	132M	39.57	5.9	2.5	2.6	0.07527	16/35	134	48	710	79	82	82.5	0.52	0.64	0.72	7.29
4	5.5	160M	52.92	5.2	2.2	2.7	0.12209	33/73	117	51	730	81.3	84.3	86	0.47	0.6	0.69	9.73
5.5	7.5	160M	72.16	5.2	2.3	2.7	0.14364	23/51	126	51	730	81.5	84.1	85.2	0.46	0.59	0.69	13.5
7.5	10	160L	96.88	4.9	2	2.5	0.16518	15/33	139	51	725	83.5	85.7	85.5	0.51	0.63	0.72	17.6

Notes:
**Class "F" insulation with ΔT105K*
Standard voltage, connection and frequency: 220-240V Δ 50Hz 380-415V Δ 50Hz
380-415V Y 50Hz 660-690V Y 50Hz
The values shown are subject to change without prior notice. To obtain guaranteed values please access our website.

Ex d - Explosion Proof Multivoltage Motors With Brake - Cast Iron Frame Improved Efficiency EFF2

Output		380 V								415 V							
		Rated speed (rpm)	% of full load						Full load current I_n (A)	Rated speed (rpm)	% of full load						Full load current I_n (A)
			Efficiency η			Power Factor (Cos φ)					Efficiency η			Power Factor (Cos φ)			
kW	HP		50	75	100	50	75	100			50	75	100	50	75	100	
II Pole - 3000 rpm																	
5.5	7.5	2930	84.5	87.5	88.2	0.77	0.85	0.89	10.6	2940	83.5	86.8	88.2	0.69	0.8	0.85	10.2
7.5	10	2910	86.5	87.5	87.5	0.8	0.87	0.9	14.5	2925	85.5	87.4	88.1	0.71	0.81	0.86	13.8
9.2	12.5	2940	87	88.5	89	0.79	0.86	0.89	17.647	2950	86.7	89	89.5	0.74	0.83	0.87	16.438
11	15	2940	88.3	90.1	90.2	0.8	0.86	0.89	20.8	2950	87.3	90	90.4	0.74	0.83	0.87	19.5
15	20	2935	90.1	91.2	91	0.81	0.87	0.89	28.1	2950	89.1	91	91.2	0.72	0.81	0.87	26.3
18.5	25	2940	90.7	92	91.5	0.78	0.86	0.89	34.5	2950	90.1	91.8	92	0.73	0.83	0.86	32.5
IV Pole - 1500 rpm																	
5.5	7.5	1460	86.5	88.1	88	0.72	0.82	0.86	11	1470	84	86.8	87.8	0.6	0.74	0.82	10.6
7.5	10	1465	87	88.6	88.4	0.75	0.84	0.88	14.6	1470	85.6	88	88.6	0.65	0.77	0.83	14.2
9.2	12.5	1455	86.5	87.7	88.4	0.73	0.82	0.86	18.4	1465	85.5	87.6	88.9	0.66	0.77	0.82	17.6
11	15	1450	88.3	89.6	89.2	0.74	0.82	0.85	22	1460	86.8	89	89.8	0.65	0.76	0.82	20.8
15	20	1450	89.5	90.5	90.1	0.73	0.82	0.86	29.4	1460	88.4	90.3	90.6	0.67	0.78	0.83	27.8
VI Pole - 1000 rpm																	
3	4	955	81	83	82	0.61	0.72	0.79	7.04	965	79	82.5	82.6	0.53	0.66	0.74	6.83
4	5.5	955	84.5	85.7	85.4	0.61	0.72	0.79	9.01	965	82.6	85.3	85.9	0.56	0.67	0.75	8.64
5.5	7.5	955	85	86.1	85.6	0.58	0.7	0.77	12.7	965	83	85.5	86	0.5	0.62	0.71	12.5
7.5	10	965	87.5	88.4	87.5	0.66	0.78	0.83	15.7	970	86.5	88	88	0.58	0.71	0.79	15
9.2	12.5	970	87.5	88.2	87.5	0.65	0.76	0.82	19.5	975	85.5	87.8	87.5	0.56	0.71	0.79	18.5
11	15	970	88	88.5	88	0.67	0.78	0.84	22.6	975	86.5	88	88.3	0.58	0.72	0.8	21.7
VIII Pole - 750 rpm																	
2.2	3	700	79	79.5	79	0.56	0.68	0.75	5.64	715	78	79	79.5	0.48	0.61	0.7	5.5
3	4	700	80	82.5	82	0.54	0.66	0.74	7.51	715	78	81.5	82.5	0.5	0.62	0.7	7.23
4	5.5	725	82.6	84.8	85.9	0.51	0.64	0.72	9.83	730	80	83.7	86	0.44	0.57	0.66	9.8
5.5	7.5	725	82.5	84.7	85.2	0.5	0.63	0.72	13.6	730	80.5	83.5	85	0.42	0.55	0.66	13.6
7.5	10	720	84.5	86	85.3	0.54	0.66	0.74	18.1	730	82.5	85.5	85.5	0.48	0.6	0.7	17.4

Notes:
- *The motors can also operate at 60Hz supply. The change in performance data can be obtained directly from the local WEG representative.*
- *The values shown herewith are subjected to change without prior notice.*

Ex d - Explosion Proof Multivoltage Motors With Brake - Cast Iron Frame Premium Efficiency EFF1

Standard Features:

- Three-phase, multivoltage, IP55, TEFC
- Output: 1.9 up to 18.5kW
- Frames: 132S up to 160L
- Voltage: 220-240/380-415V (up to 100L)
  380-415/660V (from 112M and up)
- Class “F” insulation (ΔT=80K)
- Continuous duty: S1
- Design N
- Class of temperature: T3 or T4
- Thermal protection:
  - Thermistors 130°C/T4 and 155°C/T3
  - Thermostat 140°C - brake
- Ambient temperature: 40°C, at 1000 m.a.s.l.
- Squirrel cage rotor/Aluminium die cast
- Reinforced set screws
- Internal DE and NDE bearing cap to prevent flame propagation
- Machined metal to metal surfaces between frame and terminal box
- Ground lug inside the terminal box
- Stainless steel nameplate identifying: standards, classification, temperature code and certification number
- Epoxy based painting plan 202
- Color: RAL 5009

Options Available:

- Degree of Protection: IP56 or IP66
- Bearing seals:
  - Lip seal
  - Oil seal
  - Labyrinth taconite seal and W3seal for frames 90S and above

More options available, on request

Typical Applications:

WEG explosion proof motors meet ATEX Directive 94/9/EC and are designed to operate in areas that require quick stop and/or time saving during operation in application that require explosion proof motors like:

- Machine tools
- Looms
- Packing machines
- Conveyor belts
- Wash and bottling machines
- Cranes

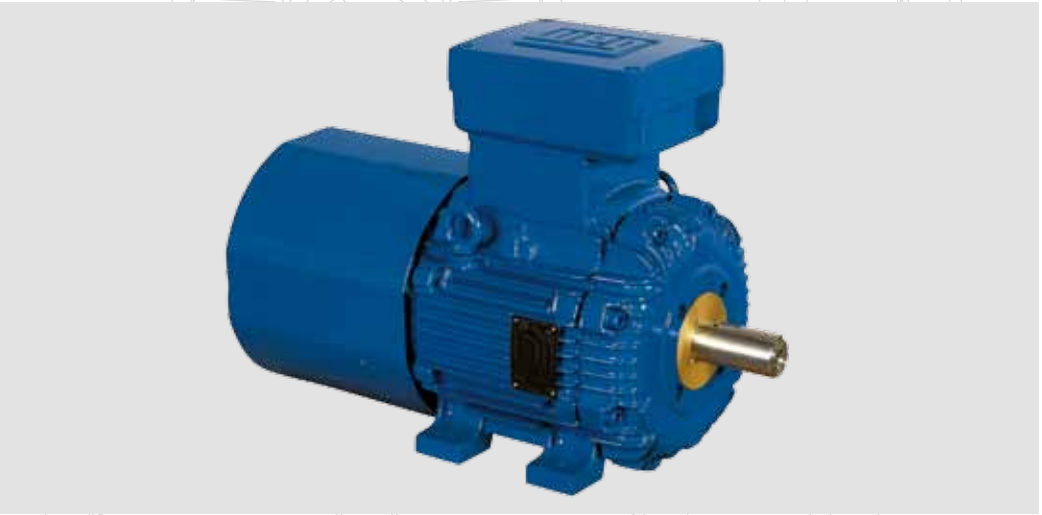

Fan Cover
Made of steel plate for frames 132M and of cast iron for frames 160M. It offers a superior mechanical rigidity, corrosion-resistance and extended lifetime.
With a design incorporating the braking system, the fan cover guarantees proper fan cover to the upper brake allowing operation in severe environments. In addition, it offers quality and performance requirements of the motors such as noise level.

Terminal Box
Made of cast iron made with plenty of internal space. The terminal box can be rotated in 90º intervals, having one or two threaded holes to connect the power supply cables. Power supply connection components are certified, then reducing short-circuit inside the terminal box. The grounding system is placed inside and outside of the terminal box for improved safety. Suitable to take the additional connection of the brake as well as bridge rectifier which is fixed internally without affecting the motor degree of protection.
* Available as top or side mounted.

Winding
The wire is enameled with class H varnish. Supplied with patented WISE (WEG Insulation System Evolution), which allows three times longer motor lifetime designed to operate in environments with excess of moisture and suitable for VFD application. The winding is designed to obtain the minimal Joule losses and temperature rise.

Bearings
WEG motors are fitted with the highest quality bearings selected from the best manufacturers in the world and designed to ensure long life of the motor even under heavy operating conditions.

Rotor
High pressure die cast rotor dynamically balanced, thus reducing vibrations. Built with premium electrical grade steel lamination to improve efficiency.

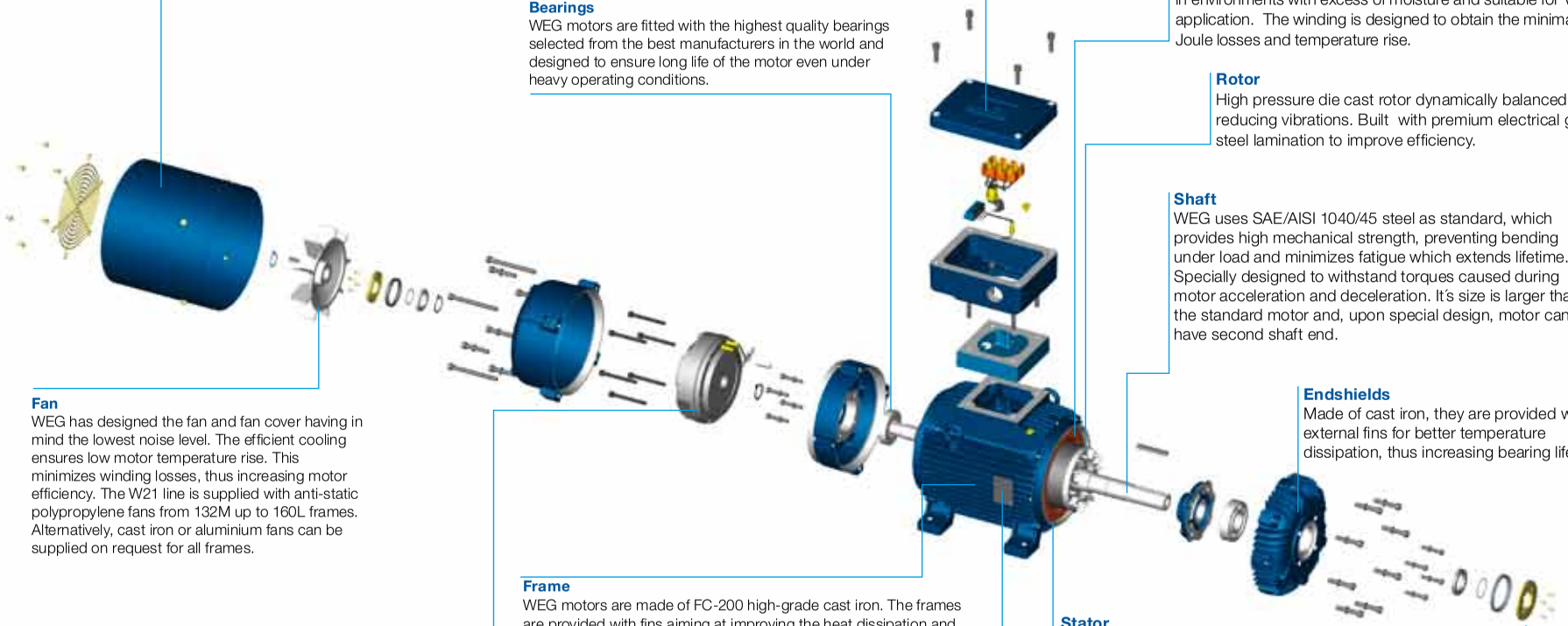

Shaft
WEG uses SAE/AISI 1040/45 steel as standard, which provides high mechanical strength, preventing bending under load and minimizes fatigue which extends lifetime. Specially designed to withstand torques caused during motor acceleration and deceleration. It´s size is larger than the standard motor and, upon special design, motor can have second shaft end.

Endshields
Made of cast iron, they are provided with external fins for better temperature dissipation, thus increasing bearing life.

Fan
WEG has designed the fan and fan cover having in mind the lowest noise level. The efficient cooling ensures low motor temperature rise. This minimizes winding losses, thus increasing motor efficiency. The W21 line is supplied with anti-static polypropylene fans from 132M up to 160L frames. Alternatively, cast iron or aluminium fans can be supplied on request for all frames.

Brake
The electromagnetic brake is of sturdy construction offering high performance for its low number of movable components and versatility on the application, resulting in extended lifetime and low maintenance. The possibility of having several torques and several power supply voltages makes this set a versatile component.

Frame
WEG motors are made of FC-200 high-grade cast iron. The frames are provided with fins aiming at improving the heat dissipation and adequately spaced to minimize air blockage due to build up of dirt. Motor designed to ensure that surface temperature is lower than ignition temperature of the gas that is present in the environment. Mechanical components are designed towithstand an explosion inside the motor without causing any risk to outside areas since there is no flame flame propagation through flame path. The motors can be mounted in any position, horizontal and vertical, withstanding the maximum axial and radial thrusts.

Stator
Built with low loss steel lamination to reduce magnetic losses and operating temperature.

Seals
WEG Explosion Proof Motors are fitted with either Lip seal or Labyrinth Tachonite as standard (see standard features list) to provide the best possible protection.

Nameplate
Stainless steel nameplate ensuring a permanent record of all motor data.

W3Seal
Exclusive WEG sealing system (tachonite + v´ring + o´ring) guarantee maximum protection against the ingress of solid and liquid contaminating

Ex d - Explosion Proof Multivoltage Motors With Brake - Cast Iron Frame Premium Efficiency EFF1

Output		IEC Frame	Full load torque C_n (Nm)	Locked rotor current I_l/I_n	Locked rotor torque T_l/T_n	Break-down torque T_b/T_n	Inertia J kgm²	Allowable locked rotor time Hot/Cold (s)	Weight (kg)	Sound dB (A)	Rated speed (rpm)	400 V						Full load current I_n (A)
												% of full load						
												Efficiency η			Power Factor (Cos φ)			
kW	HP											50	75	100	50	75	100	
II Pole - 3000 rpm																		
5.5	7.5	132S	17.95	8	2.7	3.2	0.02056	19/42	68.5	67	2935	88.5	90	90.1	0.71	0.81	0.86	10.2
7.5	10	132S	24.01	7.3	2.5	3	0.02056	10/22	90.5	67	2925	87.3	88.4	89.5	0.67	0.79	0.85	14.2
9.2	12.5	160M	29.71	8.5	2.5	3.2	0.04706	15/33	147	70	2955	87.5	90.5	91	0.72	0.82	0.86	17
11	15	160M	35.72	8.5	2.8	3.3	0.05295	14/31	122	70	2950	90	91.9	92.3	0.7	0.8	0.85	20.2
15	20	160M	47.7	7.8	2.5	3.2	0.05295	10/22	154	70	2945	90.4	91.7	91.8	0.74	0.83	0.87	27.1
18.5	25	160L	59.63	8.2	2.6	3.3	0.06471	10/22	172	70	2945	91.2	92.4	92.3	0.75	0.84	0.87	33.3
IV Pole - 1500 rpm																		
5.5	7.5	132S	35.96	8	2.4	3	0.04264	10/22	90	56	1465	86.5	89.1	89.2	0.64	0.76	0.83	10.7
9.2	12.5	160M	60.14	5.6	2.3	2.3	0.08029	27/59	122	67	1460	89.6	91	91	0.7	0.8	0.84	17.4
11	15	160M	71.92	6	2.5	2.6	0.10037	19/42	137	67	1465	90.3	91.4	91.2	0.68	0.78	0.83	21
15	20	160L	95.89	6.1	2.5	2.6	0.11542	17/37	142	67	1465	90.5	91.9	91.8	0.66	0.77	0.83	28.4
VI Pole - 1000 rpm																		
3	4	132S	29.27	6	2.1	2.5	0.04264	28/62	67	52	960	82	85	86.5	0.53	0.67	0.74	6.76
4	5.5	132M	40.24	6.5	2.2	2.5	0.05039	21/46	76	52	960	85	86.6	87.2	0.56	0.69	0.76	8.71
5.5	7.5	132M	54.87	6.4	2.2	2.4	0.06202	14/31	108	52	960	84.5	86.7	86.7	0.54	0.67	0.75	12.2
7.5	10	160M	72.41	6.6	2.5	2.9	0.14364	19/42	118	56	970	87.5	89.5	90	0.61	0.74	0.81	14.8
9.2	12.5	160L	90.51	6.2	2.2	2.7	0.16518	15/33	142	56	970	89.4	90.1	90.1	0.6	0.73	0.8	18.4
11	15	160L	108.62	7	2.4	2.7	0.17595	13/29	148	56	970	89	90.3	90.3	0.58	0.72	0.79	22.3
VIII Pole - 750 rpm																		
2.2	3	132S	29.68	5.3	2.1	2.3	0.0552	19/42	98	48	710	79	79.9	80	0.51	0.64	0.72	5.51
3	4	132M	39.57	5.9	2.5	2.6	0.07527	16/35	134	48	710	79.5	82.5	83	0.52	0.64	0.72	7.25
4	5.5	160M	53.29	5.2	2.2	2.8	0.12209	27/59	122	51	725	83	85.8	86.6	0.44	0.57	0.66	10.1
5.5	7.5	160M	72.16	5.2	2.3	2.7	0.14364	23/51	164	51	730	82.2	85	86	0.44	0.58	0.68	13.6
7.5	10	160L	96.88	4.9	2	2.5	0.16518	15/33	184	51	725	84.5	86.7	86.5	0.5	0.62	0.71	17.6

Notes:
**Class "F" insulation with ΔT105K*
Standard voltage, connection and frequency: 220-240V Δ 50Hz
380-415V Δ 50Hz
380-415V Y 50Hz
660-690V Y 50Hz
The values shown are subject to change without prior notice. To obtain guaranteed values please access our website.

Ex d - Explosion Proof Multivoltage Motors With Brake - Cast Iron Frame Premium Efficiency EFF1

Output		380 V								415 V							
		Rated speed (rpm)	% of full load						Full load current I_n (A)	Rated speed (rpm)	% of full load						Full load current I_n (A)
			Efficiency η			Power Factor (Cos φ)					Efficiency η			Power Factor (Cos φ)			
kW	HP		50	75	100	50	75	100			50	75	100	50	75	100	
II Pole - 3000 rpm																	
5.5	7.5	2930	89	90.3	90.2	0.75	0.83	0.87	10.6	2940	88	89.8	90	0.68	0.78	0.84	10.1
7.5	10	2915	88	88.7	89.3	0.73	0.83	0.87	14.7	2930	86.5	88	89.5	0.62	0.75	0.82	14.2
9.2	12.5	2950	88	90.5	90.8	0.76	0.84	0.87	17.7	2960	87	90.4	91	0.69	0.8	0.84	16.7
11	15	2945	90.5	92	92.2	0.74	0.83	0.87	20.8	2955	89.5	91.8	92.2	0.66	0.77	0.83	20
15	20	2935	90.9	91.8	91.6	0.79	0.86	0.88	28.3	3950	89.9	91.6	91.9	0.71	0.8	0.86	26.4
18.5	25	2940	91.6	92.5	92.1	0.8	0.86	0.88	34.7	2950	90.8	92.3	92.4	0.72	0.82	0.85	32.8
IV Pole - 1500 rpm																	
5.5	7.5	1460	87.5	89.3	89	0.7	0.8	0.85	11	1465	85.5	88.9	89.2	0.59	0.72	0.81	10.6
9.2	12.5	1455	90	91	90.7	0.74	0.82	0.85	18.1	1465	89.2	91	91	0.67	0.78	0.83	16.9
11	15	1460	90.6	91.5	91	0.72	0.81	0.85	21.6	1470	90	91.3	91.3	0.64	0.75	0.81	20.7
15	20	1460	90.9	91.9	91.5	0.7	0.8	0.85	29.3	1470	90.1	91.9	91.8	0.62	0.74	0.81	28.1
VI Pole - 1000 rpm																	
3	4	955	83	85.2	86	0.57	0.69	0.76	6.97	965	81	84.8	86.5	0.5	0.64	0.72	6.7
4	5.5	955	85.7	86.8	87	0.6	0.72	0.78	8.96	965	84.3	86.4	87.2	0.52	0.66	0.74	8.62
5.5	7.5	955	85.5	87	86.5	0.56	0.7	0.76	12.7	965	83.5	86.4	86.9	0.51	0.64	0.73	12.1
7.5	10	965	88	89.7	89.9	0.65	0.77	0.82	15.5	975	87	89.3	90	0.58	0.71	0.79	14.7
9.2	12.5	970	90	90.3	90	0.64	0.75	0.81	19.2	975	88.7	89.9	90	0.55	0.71	0.79	18
11	15	970	89.5	90.5	90.2	0.62	0.76	0.81	22.9	975	88.5	90	90.3	0.54	0.68	0.76	22.3
VIII Pole - 750 rpm																	
2.2	3	700	79.5	80	79.5	0.56	0.68	0.75	5.61	715	78.5	79.8	80.1	0.48	0.61	0.7	5.46
3	4	700	80.5	83	82.5	0.54	0.66	0.74	7.47	715	78.5	82	83	0.5	0.62	0.7	7.18
4	5.5	725	84	86.2	86.6	0.48	0.61	0.7	10	730	82	85.4	86.6	0.41	0.53	0.63	10.2
5.5	7.5	725	83.2	85.5	86	0.48	0.62	0.71	13.7	730	81.2	84.5	86	0.4	0.54	0.65	13.7
7.5	10	720	85.5	87	86.3	0.53	0.65	0.73	18.1	730	83.5	86.5	86.5	0.47	0.59	0.69	17.5

Ex d - Explosion Proof Motors with Brake - Cast Iron Frame
Two speed - Premium Efficiency EFF1

Output		IEC Frame	Full load torque C_n (Nm)	Locked rotor current I_l/I_n	Locked rotor torque T_l/T_n	Break-down torque T_b/T_n	Inertia J kgm²	Allowable locked rotor time Hot/Cold (s)	Weight (kg)	Sound dB (A)	Rated speed (rpm)	400 V						Full load current I_n (A)
												% of full load						
												Efficiency η			Power Factor (Cos φ)			
kW	HP											50	75	100	50	75	100	
Constant torque IV/II Pole - Dahlander Winding																		
IV/II Pole - 1500/3000 rpm																		
3.7	5	132S	2.45	7	1.9	2.3	0.04264	10/22	85.4	60	1460	84	85	84.5	0.74	0.84	0.89	7.101
4.4	5.9		1.45	7.5	2.4	2.8		7/15		68	2910	76.5	80	80.5	0.81	0.89	0.92	8.575
4.9	6.6	132S	3.26	6.5	1.7	2	0.04264	8/18	88	60	1450	82	83	83	0.78	0.86	0.89	9.57
5.9	7.9		1.96	6.5	2	2.3		6/13		68	2890	77.5	78.5	79	0.82	0.89	0.92	11.7
6.8	9.2	160M	4.51	5.6	2	2.3	0.08028	20/44	144.8	67	1460	84.5	86.5	86.7	0.67	0.78	0.83	13.639
8	11		2.69	7.1	2.4	2.8		10/22		70	2930	78	82	82.5	0.74	0.83	0.88	15.905
9.5	12.9	160M	6.35	5	1.9	2.1	0.09034	15/33	151.5	67	1455	87	88	87	0.69	0.79	0.83	18.989
11	15		3.68	6.5	2.3	2.9		7/15		70	2920	82	83	84	0.74	0.83	0.88	21.479
12	16.3	160L	8.02	5.1	1.9	2.1	0.11041	12/26	169	67	1455	88	89	88	0.69	0.79	0.83	23.714
15	20		4.9	6.5	2.3	2.8		6/13		70	2920	83	84.5	85.5	0.75	0.85	0.89	28.452
Constant torque VIII/IV Pole - Dahlander Winding																		
VIII/IV Pole - 750/1500 rpm																		
1.9	2.6	132S	6.3	25.36	2.6	2.6	0.07527	7/15	97	48	720	70	74.5	76	0.44	0.57	0.67	5.39
3.7	5		7	24.56	2.4	2.4		6/13		60	1430	79.2	80.1	82	0.78	0.87	0.9	7.24
3.3	4.5	160M	5.2	43.3	2.1	2.7	0.12208	20/44	144.7	51	730	76.5	80.5	81.5	0.45	0.58	0.68	8.595
5.5	7.5		7	36.08	2	2.7		12/26		67	1460	84	85	85.2	0.8	0.88	0.91	10.239
3.7	5	160M	5.4	48.11	2.3	2.8	0.12927	10/22	146	51	730	72.5	77.5	79.5	0.43	0.55	0.65	10.3
7	9.5		6.5	46.02	2.2	2.6		6/13		67	1450	83.5	84.2	84.5	0.79	0.87	0.9	13.3
5.5	7.5	160M	5	73.17	2.1	2.4	0.14364	15/33	151	51	720	74	77.5	79.6	0.48	0.6	0.7	14.2
8.8	12		6.5	58.13	2.1	2.4		7/15		67	1450	83.2	84.3	84.5	0.79	0.86	0.88	17.1
7	9.5	160L	5	92.04	2.3	2.4	0.16518	12/26	166	51	725	75	79.5	80.5	0.46	0.58	0.68	18.5
11	15		6.5	72.41	2.2	2.6		6/13		67	1455	84	85	85	0.77	0.86	0.89	21
Variable torque IV/II Pole - Dahlander Winding																		
IV/II Pole - 1500/3000 rpm																		
1.1	1.5	132S	7.17	5	2.1	3	0.01741	60/132	51	60	1470	69	75	78	0.5	0.6	0.69	2.95
4.4	5.9		14.1	9	2.8	3.3		7/15		68	2940	78.5	82.5	84	0.7	0.81	0.87	8.69
3	4	160M	19.11	6	2	2.4	0.05294	28/62	130	67	1470	80	83	84	0.5	0.63	0.71	7.26
12	16		38.1	8.5	2.5	2.9		6/13		70	2950	83	85	86	0.71	0.81	0.87	23.1
Variable torque VIII/IV Pole - Dahlander Winding																		
VIII/IV Pole - 750/1500 rpm																		
1.8	2.45	160M	23.57	5.2	2.1	2.8	0.12208	30/66	122	51	730	75.8	80	81.2	0.46	0.58	0.67	4.776
7.2	9.8		46.83	8.5	2.5	3.6		7/15		67	1470	82	85	85.8	0.65	0.77	0.84	14.419
3	4	160L	38.75	4.3	1.7	2.1	0.14364	30/66	131	51	725	81	82	82.5	0.54	0.67	0.75	7
11	15		72.41	7	2.4	2.7		6/13		67	1455	84	85.5	86	0.71	0.83	0.88	21

Notes:
- The motors can be also operate at 60Hz supply. The change in performance data can be obtained directly from the local WEG distributor.
- The values herewith are subjected to change without prior notice.

I_l/I_n = Locked rotor current
T_l/T_n = Locked rotor torque
I_n = Full load current

Ex d - Explosion Proof Multivoltage Motors With Brake - Cast Iron Frame

Mechanical Data

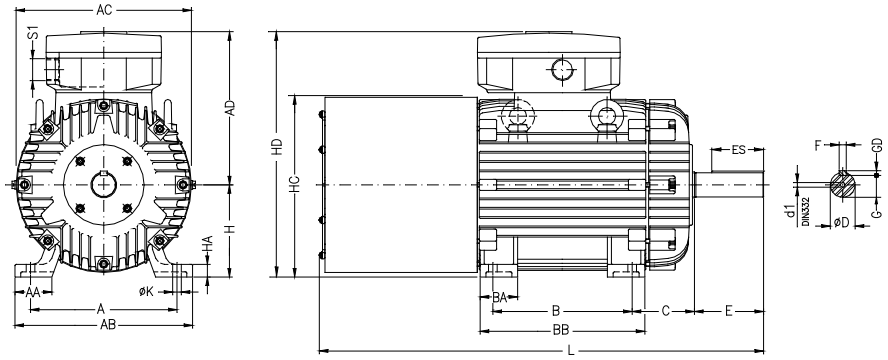

IEC FRAME	A	AA	AB	AC	AD	B	BA	BB	C	SHAFT DIMENSIONS						H	HA	HC	HD	K	L	S1	d1	BEARINGS	
										D	E	ES	F	G	GD									D.E.	N.D.E.
132S	216	51	248	270	271	140	55	188	89	38k6	80	63	10	33	8	132	19.5	282	403	12	572	2xM32x1.5	DM12	6308-ZZ	6207-ZZ
132M						178		226													610				
160M	254	64	308	312	322	210	65	254	108	42k6	110	80	12	37		160	22	315	482	14.5	738	2xM40x1.5	DM16	6309-C3	6209-Z-C3
160L						254		298													782				

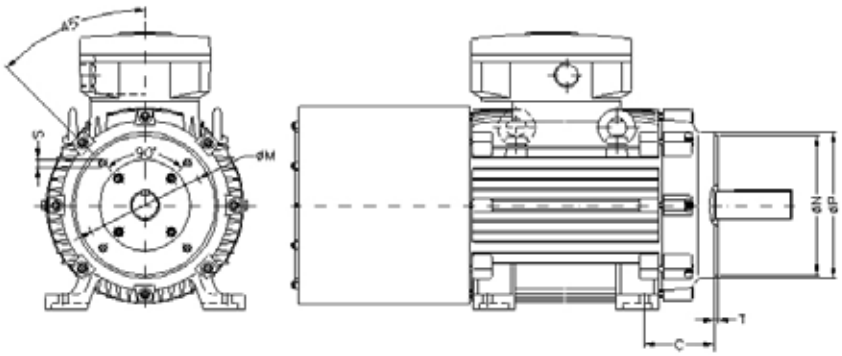

IEC FRAME	"FF" FLANGE DIMENSIONS									N° OF HOLES
	FLANGE	C	LA	M	N	P	T	S	α	
132S/M	FF-265	89	12	265	230	300	4	15	45°	4
160M/L	FF-300	108	13	300	250	350	5	19		

IEC FRAME	"C" DIN FLANGE DIMENSIONS							N° OF HOLES
	FLANGE	C	M	N	P	S	T	
132S/M	C-200	89	165	130	200	M10	3.5	4

IEC FRAME	"C" FLANGE DIMENSIONS							N° OF HOLES
	FLANGE	C	M	N	P	S	T	
132S/M	FC-184	89	184.2	215.9	225	UNC	6.3	4
160M/L		108				1/2"13		

** This data apply to Ex d - Explosion Multivoltage Motors with Brake – Improved Efficiency - EFF2, Premium Efficiency – EFF1.*

Ex e - Increased Safety Motors
Cast Iron Frame
Improved Efficiency EFF2

Standard Features:

- Three-phase, multivoltage, IP55, TEFC
- Output: 0.18 up to 100kW
- Frames: 63 up to 315S/M
- Voltage: 218-242 / 380-420 / 655-690
- Class “F” insulation (ΔT=80K)
- Continuous duty: S1
- Design N
- Class of temperature: T1 / T2 / T3 / T4
- Thermistors 110°C/T4 - 1 per phase from frame 160
- Ambient temperature: 40°C, at 1000 m.a.s.l.
- Squirrel cage rotor/Aluminium die cast
- V’Ring seal
- Grease fitting from frame 160
- Aluminium fan
- Plastic thread plug
- Increased safety terminal box
- Ground lug inside the terminal box
- Color: RAL 5010

Options Available:

- Sealed Bearings on frames 160 up to 200
- Cable gland
- Roller bearing from160
- Other bearing seals
- Other mounting
- Other paint options

More options available, on request

Typical Applications:

Environments where the probability of existing an explosive atmosphere is associated with normal operation of the equipment in amount enough to cause an explosion:

- Pumps
- Fans
- Conveyor belts
- Machine tools
- Mills
- Centrifugal machines
- Presses
- Elevators
- Looms
- Grinders
- Woodworking
- Cooling
- Packaging equipment
- Other Severe Duty applications where the environments are classified as Zone 1 and 2, groups IIA, IIB and IIC.

Bearings
WEG motors are fitted with the highest quality bearings selected from the best manufacturers in the world and designed to ensure long life of the motor even under heavy operating conditions.

Fan Cover
Made of steel plate for frames 63 up to 132M and of cast iron for frames 160M and above. It offers a superior mechanical rigidity, corrosion-resistance and extended lifetime.

Fan
WEG has designed the fan and fan cover having in mind the lowest noise level. The efficient cooling ensures low motor temperature rise. This minimizes winding losses, thus increasing motor efficiency. The W21 line is supplied with anti-static polypropylene fans from 63 up to 315S/M frames. Alternatively, cast iron or aluminium fans can be supplied on request for all frames.

Frame
WEG motors are made of FC-200 high-grade cast iron. The frames are provided with fins aiming at improving the heat dissipation and adequately spaced to minimize air blockage due to build up of dirt. Motor designed to ensure that surface temperature is lower than ignition temperature of the gas that is present in the environment. Mechanical components are designed towithstand an explosion inside the motor without causing any risk to outside areas since there is no flame flame propagation through flame path. The motors can be mounted in any position, horizontal and vertical, withstanding the maximum axial and radial thrusts.

Terminal Box
Made of cast iron made with plenty of internal space. The terminal box can be rotated in 90° intervals, having one or two threaded holes to connect the power supply cables. Power supply connection components are certified, then reducing short-circuit inside the terminal box. The grounding system is placed inside and outside of the terminal box for improved safety. * Available as top or side mounted.

Winding
The wire is enameled with class H. Supplied with patented WISE (WEG Insulation System Evolution), which allows three times longer motor lifetime designed to work in environments with excess of moisture and suitable for VFD application. The winding is designed to obtain the smallest Joule losses and temperature rise. Electric design of the winding is specially developed to meet standard requirements in addition to zone and group of gases.

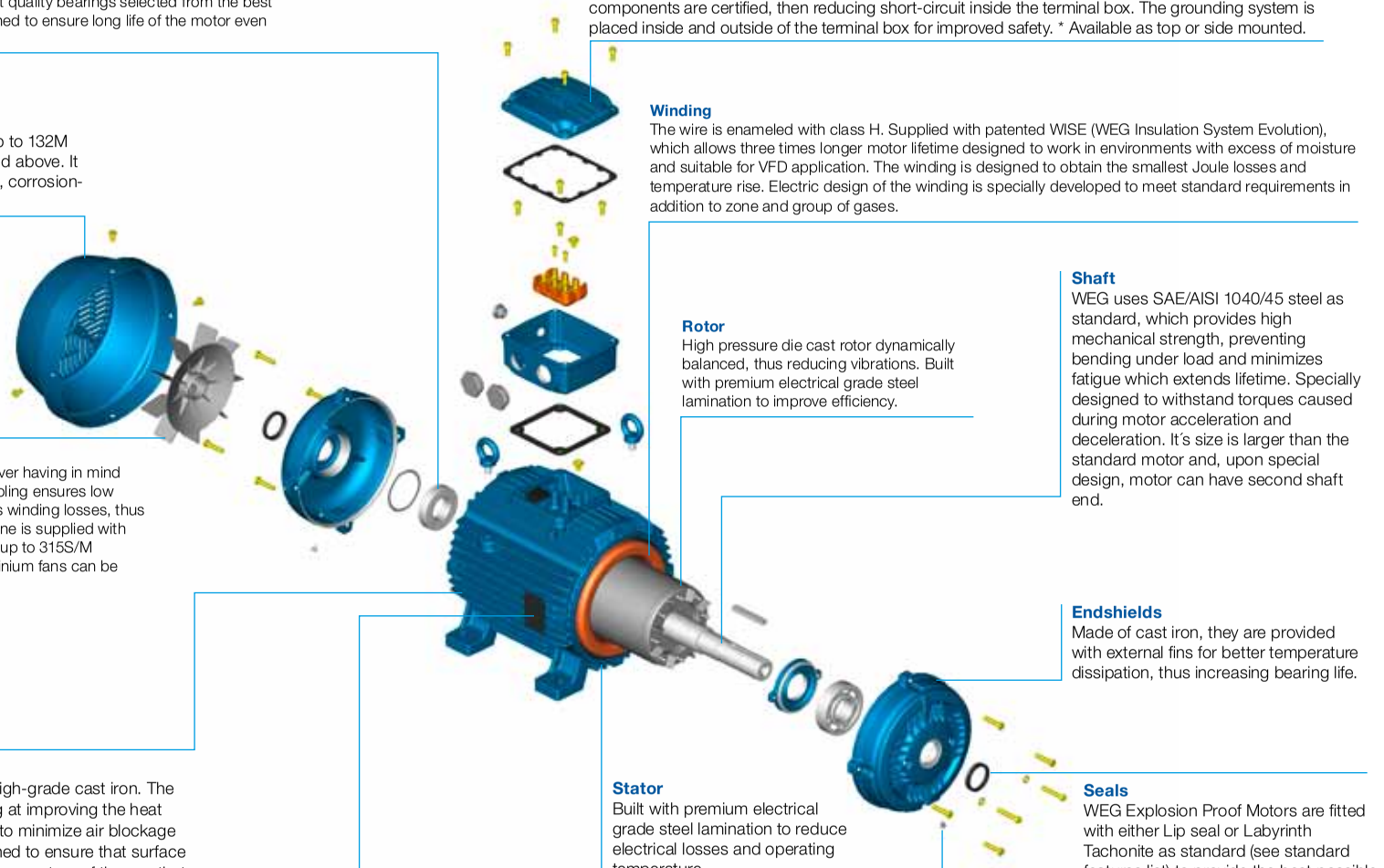

Rotor
High pressure die cast rotor dynamically balanced, thus reducing vibrations. Built with premium electrical grade steel lamination to improve efficiency.

Shaft
WEG uses SAE/AISI 1040/45 steel as standard, which provides high mechanical strength, preventing bending under load and minimizes fatigue which extends lifetime. Specially designed to withstand torques caused during motor acceleration and deceleration. It´s size is larger than the standard motor and, upon special design, motor can have second shaft end.

Endshields
Made of cast iron, they are provided with external fins for better temperature dissipation, thus increasing bearing life.

Stator
Built with premium electrical grade steel lamination to reduce electrical losses and operating temperature.

Seals
WEG Explosion Proof Motors are fitted with either Lip seal or Labyrinth Tachonite as standard (see standard features list) to provide the best possible protection.

Nameplate
Stainless steel nameplate ensuring a permanent record of all motor data.

Drain Hole
Provided with plastic drain plug allowing drainage of condensed water.

Ex e - Increased Safety Motors - Cast Iron Frame
Improved Efficiency EFF2

Output		IEC Frame	Full load torque C_n (Nm)	Locked rotor current I_l/I_n	Locked rotor torque T_l/T_n	Break-down torque T_b/T_n	Inertia J kgm²	Weight (kg)	Sound dB (A)	t_E Time				380V - 420V				Data Sheet PTB-ATEX
														Rated speed (rpm)	% of full load		I_n (A)	
															Efficiency η 100%	Power Factor (Cos φ) 100%		
kW	HP									T1	T2	T3	T4					
II Pole - 3000 rpm																		
0.18	0.25	63	0.64	4.4	2.7	2.7	0.00012	8	52	35	35	35	-	2750	66.2	0.77	0.51	3204/05
0.25	0.33	63	0.85	4.5	2.8	3.3	0.00016	8	52	23	23	19	-	2735	66.8	0.72	0.75	3204/01
0.37	0.5	71	1.25	5.8	3.1	3.1	0.00033	10	56	24	24	24	9	2810	73.9	0.83	0.87	3205/01
0.55	0.75	71	1.88	6.3	2.9	3.3	0.00045	11	56	18	18	15	-	2800	75.7	0.86	1.22	3205/05
0.75	1	80	2.48	5.9	3.0	3.2	0.00079	15	59	20	20	10	-	2830	75.0	0.87	1.66	3206/01
1.1	1.5	80	3.74	6.1	2.8	2.9	0.00096	16	59	18	18	7*	-	2815	79.0	0.82	2.45	3206/07
1.3	1.77	90S	4.35	6.9	2.7	2.8	0.00205	20	65	14	14	11	-	2855	77.9	0.86	2.80	3207/07
1.85	2.51	90L	6.19	7.1	2.7	2.7	0.00266	24	65	11	11	7	-	2850	81.6	0.85	3.85	3207/01
2.5	3.4	100L	8.31	7.5	2.3	2.7	0.00616	32	67	10	10	8	-	2875	77.7	0.91	5.10	3208/01
3.3	4.5	112M	10.9	8.1	2.3	2.9	0.00765	42	64	18	18	6	-	2890	84.2	0.87	6.50	3209/01
4.6	6.25	132S	15.1	7.4	2.2	2.7	0.02243	70	68	17	17	13	-	2905	81.1	0.93	8.80	3210/09
5.5	7.5	132S	18.2	7.7	2.1	2.8	0.02617	68	68	11	11	9	-	2900	83.0	0.92	10.4	3210/01
6.5	8.8	132S	21.5	7.7	2.1	2.7	0.02430	67	68	9	9	-	-	2880	83.8	0.91	12.3	3210/03
7.5	10	160M	23.9	6.8	2.0	2.7	0.04707	108	70	22	22	22	-	2940	85.3	0.90	14.1	3006/09
10	13.5	160M	32.2	7.1	1.7	2.5	0.05883	120	70	19	19	17	-	2945	89.6	0.88	18.3	3006/05
12.5	17	160L	40.8	6.9	1.7	2.4	0.06766	135	70	14	14	9	-	2930	87.3	0.88	23.5	3006/03
15	20	180M	47.5	7.1	1.8	2.5	0.11919	170	70	15	15	14	-	2955	91.5	0.86	27.5	3036/01
20	27	200L	64.0	7.5	1.5	2.7	0.20630	220	74	30	30	15	-	2965	92.0	0.91	35.0	3017/01
24	33	200L	78.3	6.7	1.6	2.6	0.22424	244	74	33	33	12	-	2960	88.5	0.89	44.0	3017/03
28	38	225S/M	89.7	7.4	2.2	2.9	0.46640	411	78	30	30	17	-	2975	91.1	0.87	51.0	3001/01
36	49	250S/M	117	7.5	2.0	3.3	0.59196	500	78	28	28	15	-	2950	91.5	0.92	61.7	3018/01
47	64	280S/M	151	6.9	1.8	2.6	1.55324	730	79	50	50	30	-	2980	85.7	0.91	87.0	3015/01
58	79	280S/M	186	7.0	1.7	3.0	1.74151	820	79	50	50	23	-	2980	90.2	0.91	102	3015/03
68	92.4	315S/M	217	8.2	1.7	2.7	1.88272	890	81	35	35	15	-	2990	91.4	0.91	118	3002/01
80	109	315S/M	257	7.5	1.5	2.8	2.16513	1020	81	35	35	15	-	2980	92.9	0.92	135	3002/03
IV Pole - 1500 rpm																		
0.18	0.25	63	1.25	4.1	2.1	2.2	0.00056	8	44	24	24	24	-	1405	63.5	0.66	0.62	3204/03
0.25	0.33	71	1.64	4.7	2.8	2.8	0.00079	12	43	70	70	70	40	1410	74.8	0.67	0.72	3205/11
0.37	0.5	71	2.55	4.2	2.5	2.5	0.00079	12	43	40	40	40	-	1375	70.4	0.66	1.15	3205/09
0.55	0.75	80	3.67	6.1	2.5	2.6	0.00242	15	44	18	18	18	-	1435	73.2	0.77	1.40	3206/11
0.75	1	80	4.96	5.6	2.4	2.4	0.00294	16	44	14	14	14	-	1415	73.5	0.84	1.75	3206/09
1	1.36	90S	6.73	6.4	2.7	2.8	0.00504	20	47	17	17	17	-	1420	78.4	0.80	2.30	3207/05
1.35	1.83	90L	9.08	6.7	2.6	3.0	0.00672	23	47	15	15	15	-	1415	79.6	0.83	2.95	3207/03
2	2.72	100L	13.5	6.3	2.3	2.5	0.00765	28	51	17	17	17	-	1415	80.9	0.82	4.35	3208/05
2.5	3.4	100L	16.9	6.3	2.4	2.6	0.01072	35	51	14	14	14	-	1410	79.5	0.84	5.40	3208/03
3.6	4.9	112M	24.1	7.2	2.3	2.8	0.01875	46	55	11	11	10	-	1430	82.6	0.85	7.40	3209/03
5	6.8	132S	32.7	8.4	2.2	2.8	0.05039	67	58	7	7	7	-	1460	84.8	0.86	9.90	3210/05
6.8	9.24	132M	44.5	8.2	2.2	2.8	0.05815	73	58	8	8	7	-	1460	85.2	0.86	13.4	3210/07
10	13.5	160M	65.0	6.9	2.3	2.8	0.11040	100	62	17	17	17	-	1460	82.4	0.87	19.4	3006/07
13.5	18.3	160L	87.4	7.8	2.0	3.0	0.13048	130	62	11	11	7	-	1470	86.2	0.87	26.0	3006/01
15	20	180M	95.2	7.1	2.0	2.4	0.19740	190	52	24	24	21	-	1475	89.4	0.85	28.5	3036/05
17.5	23.8	180L	113	7.2	2.0	2.3	0.21527	185	64	19	19	12	-	1475	92.2	0.83	33.0	3036/03
24	33	200L	157	7.3	2.0	2.2	0.38611	272	67	17	17	14	-	1480	93.0	0.85	43.5	3017/05
30	40	225S/M	189	7.2	2.0	2.8	0.83980	375	70	22	22	22	-	1485	93.3	0.84	55.0	3001/03
36	49	225S/M	232	7.1	2.1	2.4	0.97990	460	70	20	20	14	-	1485	88.9	0.90	65.0	3001/05
58	79	280S/M	37.96	7.9	1.9	2.8	2.811	764	76	50	50	20	-	1490	93.7	0.82	109	3015/07
44	59.8	250S/M	283	7.1	2.0	2.7	1.15478	500	70	21	21	15	-	1485	91.5	0.89	78.0	3018/03
70	95	280S/M	446	8.0	2.0	3.0	3.21200	900	74	40	40	24	-	1495	93.2	0.84	129	3015/05
84	114	315S/M	537	7.6	1.5	2.8	3.53320	929	77	35	35	21	-	1490	95.3	0.81	157	3002/05
100	136	315S/M	643	6.7	1.5	2.6	3.77410	967	77	27	27	6*	-	1485	92.4	0.84	186	3002/07

Notes:
**Class "F" insulation with ΔT105K*
Standard voltage, connection and frequency: 220-240V Δ 50Hz 380-415V Δ 50Hz
380-415V Y 50Hz 660-690V Y 50Hz
The values shown are subject to change without prior notice. To obtain guaranteed values please access our website.

Ex e - Increased Safety Motors - Cast Iron Frame

Mechanical Data

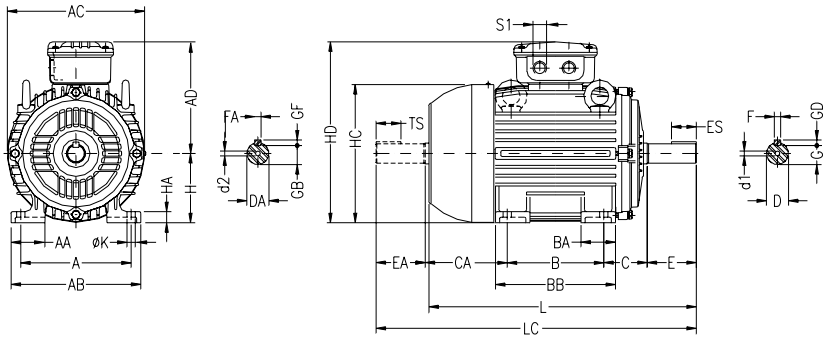

IEC FRAME	A	AA	AB	AC	AD	B	BA	BB	C	CA	SHAFT DIMENSIONS												H	HA	HC	HD	K	L	LC	S1	d1	d2	BEARINGS	
											D	E	ES	F	G	GD	DA	EA	TS	FA	GB	GF											D.E.	N.D.E.
63	100	21	116	125	119	80	99	96	40	68	11j6	23	14	4	8.5	4	9x6	20	12	3	7.2	3	63	8	124	162	7	216	241		EM4	EM3	6201-ZZ	
71	112	30	132	141	127	90	38	113.5	45	88	14j6	30	18	5	11	5	11j6	23	14	4	8.5	4	71	12	139	198		248	276	2xM20x1.5	DM5	EM4	6203-ZZ	6202-ZZ
80	125	35	149	159	136	100	40	123.5	50	90	19j6	40	28	6	15.5	6	14j6	30	18	5	11	5	80	13	157	216	10	276	313		DM6	DM8	6204-ZZ	6203-ZZ
90S	140	38	164	179	155	125	42	131	56	104	24j6	50	36	8	20	7	19j6	40	28	5	13	5	90	15	177	245		304	350	2xM25x1.5	DM8	DM6	6205-ZZ	6204-ZZ
90L								156																				329	375					
100L	160	49	188	199	165		50	173	63	118	28j6	60	45		24		22j6	50	36	6	18.5	6	100	16	198	265	12	376	431		DM10	DM8	6206-ZZ	6205-ZZ
112M	190	48	220	232	184	140		177	70	128							24j6			8	20	7	112	18.5	235	296		393	448	2xM32x1.5			6307-ZZ	6206-ZZ
132S	216	51	248	270	212		55	187	89	150	38k6	80	63	10	33	8	28j6	60	45		24		132	20	274	344		452	519		DM12	DM10	6308-ZZ	6207-ZZ
132M						178		225																				490	557					
160M	254	64	308	312	255	210	65	254	108	174	42k6	110	80	12	37	8	42k6	110	80	12	37	8	160	22	317	415	14.5	568	732	2xM40x1.5	DM16		6309-C3	6209-Z-C3
160L						254		298																				642	756					
180M	279	80	350	358	279	241	75	254	121	208	48k6			14	42.5	9	48k6			14	42.5	9	180	28	360	455		664	782				6311-C3	6211-Z-C3
180L						279		302																				702	820					
200M	318	82	385	396	308	267	85		133	222	55m6			16	49	10				16	49	10	200	30	402	580	18.5	729	842	2xM50x1.5	M20		6312-C3	6212-Z-C3
200L						305		379																				767	880					
225S/M	356	80	436	476	373	286	105	391	149	280	55m6*		100				55m6*	140	125	16	49	10	225	34	466	598		817	935				6314-C3	
						311				255	60m6						60m6											847	995					
250S/M	406	100	506				138	449	168	312	60m6*			18	53	11	60m6*				53	11	250	42	491	623	24	923	1071					
						349				274	65m6						65m6																	
280S/M	457		557			368	142	513	190	359	65m6*	140	125		58		65m6*	149	125	18			280		578	748		1036	1188					
				600	468	419				299	75m6			20	67.5	12	65m6				58													
315S/M	508	120	628		497	406	152	558	216	376	65m6*			18	58	11	60m6*				53		315	52	613	812	28	1126	1274	2xM63x1.5			6314-C3	
						457				325	80m6	170	160	22	71	14	65m6				58							1156	1308				6319-C3	6316-C3
315B		132	636	698	566	630	162	633			75m6*	140	125	20	67.5	12	*							47.5	664	865		1432	-		M20	-	6316-C3	6314-C3
											100m6	210	200	28	90	16												1502			M24		6322-C3	6319-C3
355M/L	610	140	750	816	685	560	200	760	254	458	75m6*	140	125	20	67.5	12	60m6*	140	125	18	53	11	355	50	725	1040		1396	1561		M20		6316-C3	6314-C3
						630				388	100m6	210	200	28	90	16	80m6	170	160	22	71	14						1466	1661		M24	M20	6322-C3	6319-C3

- *All the dimensions are given in millimeters*
- *Certified threaded plugs for EEx e motor line*
- *The values shown are subject to change without prior notice*

** Shaft dimensions for II pole motors, only for direct coupling*

*** For frame 100L, 3 kW, 4 poles, Premium Efficiency motors, the L dimension is 420mm and LC dimension is 475mm.*

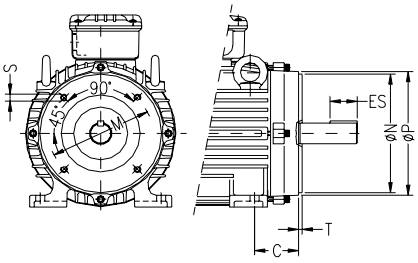

"C" Din Flange

IEC FRAME	"C" DIN FLANGE							N° OF HOLES
	FLANGE	C	M	N	P	S	T	
63	C-90	40	75	60	90	M5	2.5	4
71	C-105	45	85	70	105	M6		
80	C-120	50	100	80	120		3	
90S/L	C-140	56	115	95	140	M8		
100L 112M	C-160	63 70	130	110	160		3.5	
132S/M	C-200	89	165	130	200	M10		

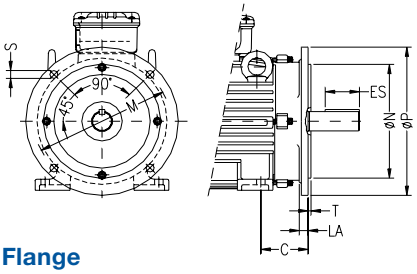

"FF" Flange

IEC FRAME	"FF" FLANGE									N° OF HOLES
	FLANGE	C	LA	M	N	P	T	S	α	
63	FF-115	40	9	115	95	140	3	10	45°	4
71	FF-130	45		130	110	160	3.5			
80	FF-165	50	10	165	130	200		12		
90S/L		56								
100L 112M	FF-215	63 70	11	215	180	250	4	15		
132S/M	FF-265	89	12	265	230	300				
160M/L 180M/L	FF-300	108 121	18	300	250	350	5	19		
200M/L	FF-350	133		350	300	400				
225S/M 250S/M	FF-400	149 168		400	350	450			22°30'	8
280S/M	FF-500	190		500	450	550				
315S/M 315B	FF-600	216	22	600	550	660	6	24		
355M/L	FF-740	254		740	680	800				

Ex nA - Non Sparking Motors
Cast Iron Frame
Improved Efficiency EFF2

Standard Features:

- Three-phase, multivoltage, IP55, TEFC
- Output: 0.12 up to 250kW
- Frames: 63 up to 355M/L
- Voltage: 220-240/380-415V (up to 100L)
  380-415/660V (from 112M and up)
- Class “F” insulation (ΔT=80K)
- Continuous duty: S1
- Design N
- Ambient temperature: 40°C, at 1000 m.a.s.l.
- Squirrel cage rotor/Aluminium die cast
- V’Ring seal
- Temperature classification:
  - Zone 2: class of temperature T3
  - Zone 22: maximum motor guaranteed external surface temperature T125°C.
  Temperature limitation due to the presence of dust clouds (for materials with ignition temperature above 125° C) and presence of dust layers (up to 5mm).
  Note: On VFD Application, motor temperature class is ΔT = 160° C, marking: CE Ex II 3D T160°C
- Fan: Conductive plastic (63-315 frames)
  Aluminium (355 frames)
- Grease fitting from frame 160
- Plastic thread plug
- Increased safety terminal box
- Ground lug inside the terminal box
- Color: RAL 5010

Options Available:

Options Available:

- Degree of Protection: IP56, IP65 or IP66(W)
- Sealed Bearings on frames 160 up to 200
- Cable glands
- Other paint options

More options available, on request

Typical Applications:

Typical Applications:
These motors are used in environment where an explosive atmosphere will probably not be present under normal operating conditions and, if any, this will be for short periods of time:

- Pumps
- Fans
- Conveyor belts
- Machine tools
- Mills
- Centrifugal machines
- Presses
- Elevators
- Looms
- Grinders
- Woodworking
- Cooling
- Packaging equipment
- Other severe duty applications where the environments are classified as Zone 2, groups IIA, IIB and IIC.

Terminal Box
Made of cast iron made with plenty of internal space. The terminal box can be rotated in 90º intervals, having one or two threaded holes to connect the power supply cables. Power supply connection components are certified, then reducing short-circuit inside the terminal box. Designed in such a way that the energized components remain at a minimum safe distance from grounded components parts. In order to allow end users safety, the Ex "n" motors are designed with grounding lug inside and outside of the terminal box, with the inside grounding lugs duly connected from the factory. * Available as top or side mounted.

Bearings
WEG motors are fitted with the highest quality bearings selected from the best manufacturers in the world and designed to ensure long life of the motor even under heavy operating conditions.

Fan Cover
Made of steel plate for frames 63 up to 132M and of cast iron for frames 160M and above. It offers a superior mechanical rigidity, corrosion-resistance and extended lifetime.

Winding
The wire is enameled with class H. Supplied with patented WISE (WEG Insulation System Evolution), which allows three times longer motor lifetime designed to work in environments with excess of moisture and suitable for VFD application. The winding is designed to obtain the smallest Joule losses and temperature rise.

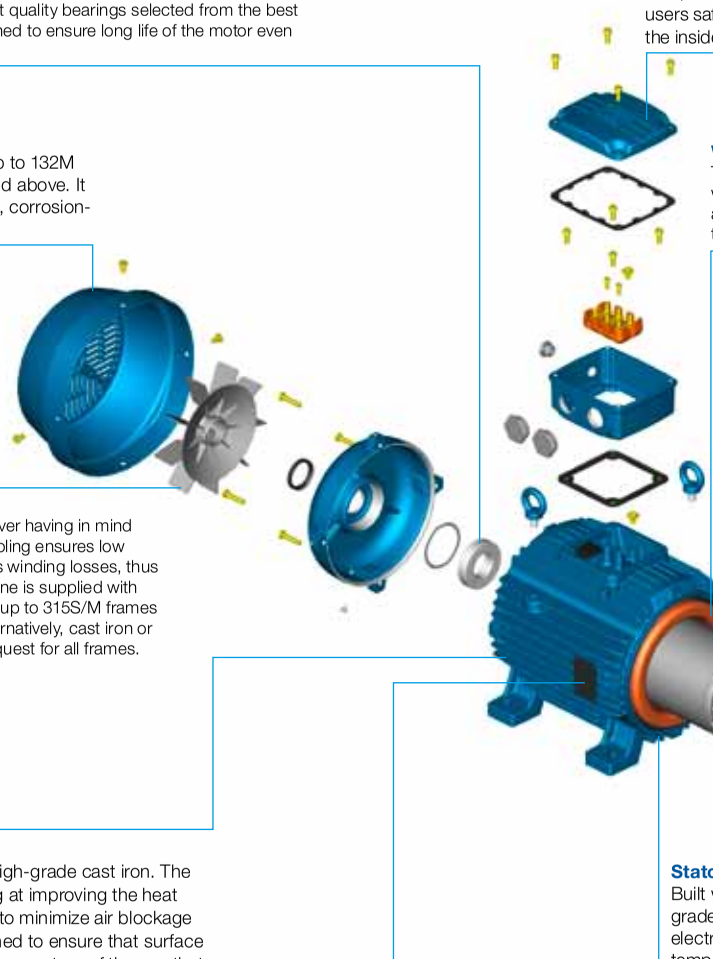

Rotor
High pressure die cast rotor dynamically balanced, thus reducing vibrations. Built with premium electrical grade steel lamination to improve efficiency. Designed to meet performance and surface temperature standard requirements (as long as it is kept below the ignition temperature of the possible present gas).

Shaft
WEG uses SAE/AISI 1040/45 steel as standard, which provides high mechanical strength, preventing bending under load and minimizes fatigue which extends lifetime. Specially designed to withstand torques caused during motor acceleration and deceleration. It´s size is larger than the standard motor and, upon special design, motor can have second shaft end.

Fan
WEG has designed the fan and fan cover having in mind the lowest noise level. The efficient cooling ensures low motor temperature rise. This minimizes winding losses, thus increasing motor efficiency. The W21 line is supplied with anti-static polypropylene fans from 63 up to 315S/M frames and aluminium for 355M/L frame.. Alternatively, cast iron or aluminium fans can be supplied on request for all frames.

Endshields
Made of cast iron, they are provided with external fins for better temperature dissipation, thus increasing bearing life.

Frame
WEG motors are made of FC-200 high-grade cast iron. The frames are provided with fins aiming at improving the heat dissipation and adequately spaced to minimize air blockage due to build up of dirt. Motor designed to ensure that surface temperature is lower than ignition temperature of the gas that is present in the environment. Mechanical components are designed towithstand an explosion inside the motor without causing any risk to outside areas since there is no flame flame propagation through flame path. The motors can be mounted in any position, horizontal and vertical, withstanding the maximum axial and radial thrusts.

Stator
Built with premium electrical grade steel lamination to reduce electrical losses and operating temperature.

Seals
WEG Explosion Proof Motors are fitted with either Lip seal or Labyrinth Tachonite as standard (see standard features list) to provide the best possible protection.

Nameplate
Stainless steel nameplate ensuring a permanent record of all motor data.

Drain Hole
Provided with plastic drain plug allowing drainage of condensed water.

Ex nA - Non Sparking Motors - Cast Iron Frame
Improved Efficiency EFF2

Output		IEC Frame	Full load torque C_n (Nm)	Locked rotor current I_r/I_n	Locked rotor torque T_r/T_n	Break-down torque T_b/T_n	Inertia J kgm²	Allowable locked rotor time Hot/Cold (s)	Weight (kg)	Sound dB (A)	Rated speed (rpm)	400 V						Full load current I_n (A)
												% of full load						
												Efficiency η			Power Factor (Cos φ)			
kW	HP											50	75	100	50	75	100	
II Pole - 3000 rpm																		
0.12	0.16	63	0.41	5	2.8	3	0.000	25/55	7.7	52	2760	58	64.8	65.5	0.51	0.64	0.74	0.357
0.18	0.25	63	0.64	4.4	2.5	2.5	0.000	30/66	7.7	52	2730	63.5	68.5	69.5	0.62	0.76	0.81	0.462
0.25	0.33	63	0.85	4.5	2.5	2.5	0.000	18/40	8.2	52	2730	64	68.5	71.2	0.58	0.71	0.8	0.634
0.37	0.5	71	1.25	5.5	3	3.2	0.000	23/51	10.9	56	2810	69	73.8	74.5	0.63	0.77	0.85	0.843
0.55	0.75	71	1.89	5.7	2.7	2.7	0.000	16/35	11.6	56	2790	72.5	76.6	76.7	0.68	0.8	0.86	1.2
0.75	1	80	2.51	6.8	3.1	3.1	0.001	20/44	15.2	59	2795	76.5	80.5	80.5	0.73	0.82	0.86	1.56
1.1	1.5	80	3.74	7.8	3.4	3.4	0.001	15/33	16.4	59	2820	81	83	83.6	0.64	0.76	0.84	2.26
1.5	2	90S	4.91	7.3	2.8	2.8	0.002	14/31	20.2	62	2860	83.2	84.9	84.5	0.68	0.8	0.85	3.01
2.2	3	90L	7.35	8.4	3.7	3.5	0.003	9/20	22.5	62	2865	84	86	86.6	0.64	0.76	0.83	4.42
3	4	100L	9.7	8.9	3	3.1	0.007	12/26	32.2	67	2895	84.5	87	88.3	0.73	0.83	0.87	5.64
4	5.5	112M	13.32	8.2	2.7	3.4	0.008	17/37	42.7	64	2900	87	88.4	88.6	0.72	0.83	0.87	7.49
5.5	7.5	132S	17.95	8	2.7	3.2	0.021	19/42	61	67	2935	88.5	90	90.1	0.71	0.81	0.86	10.2
7.5	10	132S	24.01	8	2.5	2.9	0.024	13/29	66	67	2925	88.5	90.6	90.8	0.72	0.82	0.87	13.7
9.2	12.5	132M	29.91	8.5	2.8	3.1	0.028	11/24	74	67	2935	88.5	90.9	91	0.7	0.81	0.87	16.8
11	15	160M	35.72	8.5	2.8	3.3	0.053	14/31	117.9	70	2950	90	91.9	92.3	0.7	0.8	0.85	20.2
15	20	160M	47.7	8.2	2.4	3.3	0.059	12/26	130.5	70	2945	91	92	92.5	0.74	0.82	0.86	27.2
18.5	25	160L	59.63	8.8	2.5	3.2	0.068	10/22	135.2	70	2945	91.9	92.8	93.1	0.73	0.82	0.85	33.7
22	30	180M	71.43	8.6	2.7	3.3	0.119	14/31	193.7	70	2950	92.5	93.5	93.7	0.76	0.84	0.87	39
30	40	200L	94.92	7.4	2.7	2.8	0.206	31/68	248	74	2960	92.8	93.7	94	0.77	0.84	0.87	52.9
37	50	200L	118.65	7.6	2.7	2.7	0.224	25/55	260	74	2960	93.2	94	94.6	0.76	0.84	0.87	64.9
45	60	225S/M	141.9	8.5	2.4	2.9	0.448	18/40	414	82	2970	93.6	94.5	94.7	0.82	0.88	0.9	76.2
55	75	250S/M	177.67	8.9	2.6	3.4	0.502	15/33	460.8	82	2965	94	95	95	0.85	0.89	0.91	91.8
75	100	280S/M	236.1	7.7	2.2	2.9	1.271	51/112	740	83	2975	93.2	94.4	95.6	0.83	0.87	0.89	127
90	125	280S/M	295.12	8.2	2.2	2.8	1.412	42/92	780	83	2975	94.1	95.5	95.8	0.82	0.88	0.9	151
110	150	315S/M	354.15	8	2.3	2.8	1.506	38/84	830	83	2975	94.4	95.3	95.8	0.82	0.87	0.89	186
132	175	315S/M	413.17	7.8	2.2	2.7	1.742	32/70	900	83	2975	94.3	95.5	96	0.82	0.88	0.89	223
150	200	315S/M	472.99	7.9	2.2	2.7	2.118	31/68	1010	83	2970	95	95.8	96.2	0.84	0.89	0.9	250
160	220	315S/M	520.29	7.8	2.2	2.5	2.118	33/73	1010	83	2970	95	96	96.2	0.85	0.89	0.9	267
185	250	315S/M	590.25	8.2	2.4	2.8	2.118	28/62	1010	83	2975	95	95.9	96.2	0.8	0.86	0.88	315
200	270	355M/L	635.33	7.2	1.8	2.6	4.826	70/154	1490	81	2985	93.7	95.2	95.6	0.89	0.91	0.92	328
220	300	355M/L	705.93	8.5	2.2	3	5.171	65/143	1650	81	2985	95.2	96.1	96.4	0.85	0.9	0.92	358
250	340	355M/L	800.05	7.8	1.7	2.5	5.746	65/143	1750	81	2985	95.5	96.3	96.4	0.87	0.91	0.92	407
HIGH-OUTPUT DESIGN																		
75	100	250S/M	236.9	8.5	3	3.4	0.55609	10/22	490	82	2965	93	94.3	94.6	0.83	0.88	0.9	127
110	150	280S/M	354.15	8	2.3	2.8	1.50617	38/84	830	83	2975	94.4	95.3	95.8	0.82	0.87	0.89	186
IV Pole - 1500 rpm																		
0.12	0.16	63	0.79	4.2	2.4	2.5	0.00045	20/44	7	44	1415	45	54	58.5	0.46	0.56	0.67	0.442
0.18	0.25	63	1.25	4	2.2	2.5	0.00056	23/51	8.6	44	1400	53.8	59.5	62	0.52	0.63	0.72	0.582
0.25	0.33	71	1.64	5	3	3.1	0.00079	48/106	11.7	43	1410	68.5	71.5	73	0.5	0.61	0.7	0.706
0.37	0.5	71	2.52	4.4	2.7	2.8	0.00079	37/81	11.8	43	1395	68	72	73.5	0.48	0.6	0.7	1.04
0.55	0.75	80	3.68	6	2.6	2.8	0.00242	17/37	16.3	44	1430	69	73	75	0.56	0.69	0.78	1.36
0.75	1	80	4.96	5.5	2.4	2.6	0.00294	14/31	16.1	44	1415	73.5	76.2	76.2	0.62	0.74	0.83	1.71
1.1	1.5	90S	7.37	6.5	3	3	0.00504	13/29	21.7	49	1430	76	80	80.6	0.57	0.69	0.78	2.53
1.5	2	90L	9.89	6.2	2.7	2.7	0.00672	12/26	24.4	49	1420	80.3	82	81.7	0.64	0.77	0.83	3.19
2.2	3	100L	14.84	6.7	2.7	2.9	0.00842	14/31	30.2	53	1420	81	82.3	83	0.65	0.78	0.83	4.61
3	4	100L	19.93	6.5	2.7	2.7	0.00995	10/22	32.8	53	1410	83.6	85	84.7	0.68	0.79	0.86	5.94
4	5.5	112M	27.02	7.5	2.7	2.8	0.01875	12/26	46.7	56	1430	86	87.4	87.1	0.7	0.81	0.87	7.62
5.5	7.5	132S	35.96	8	2.4	3	0.04652	11/24	61.7	60	1465	85.4	87.7	88.5	0.68	0.79	0.85	10.6
7.5	10	132M	47.95	8	2.5	2.8	0.05427	8/18	64.7	60	1465	86.4	88.4	88.6	0.7	0.8	0.86	14.2
9.2	12.5	160M	60.34	6	2.2	2.4	0.06524	15/33	95	67	1455	86	87.7	88.8	0.69	0.79	0.84	17.8
11	15	160M	72.41	6	2.3	2.5	0.08029	16/35	107.8	67	1455	87.6	89.4	89.9	0.7	0.79	0.84	21
15	20	160L	96.55	6	2.3	2.4	0.10539	13/29	126.5	67	1455	89	90.4	90.6	0.69	0.79	0.84	28.4
18.5	25	180M	119.46	7	2.7	2.8	0.17939	18/40	183.2	64	1470	89.8	91.5	92.1	0.68	0.79	0.84	34.5
22	30	180L	143.35	7.5	2.8	2.8	0.21528	14/31	189.5	64	1470	91	92.2	92.4	0.67	0.78	0.83	41.4
30	40	200L	190.48	6.5	2.2	2.5	0.33095	17/37	247.5	69	1475	91.8	93	93	0.75	0.82	0.85	54.8
37	50	225S/M	237.3	7.2	2.3	2.7	0.62988	20/44	353	70	1480	91.2	92.2	92.8	0.76	0.85	0.88	65.4
45	60	225S/M	285.72	7	2.3	2.7	0.76985	16/35	382.2	70	1475	91	92.9	93.5	0.76	0.85	0.88	78.9
55	75	250S/M	357.15	7	2.3	2.6	0.97981	16/35	451.4	70	1475	93	93.5	93.7	0.78	0.86	0.89	95.2
75	100	280S/M	472.99	6.7	2.1	2.4	2.32858	44/97	735	76	1485	92.4	93.8	94.3	0.81	0.86	0.88	130
90	125	280S/M	591.24	7.1	2.4	2.5	2.56947	31/68	736.9	76	1485	92.3	93.9	94.2	0.8	0.86	0.88	157
110	150	315S/M	709.49	7.1	2.3	2.6	2.81036	27/59	866.1	77	1485	92.8	94.4	94.4	0.78	0.85	0.88	191
132	175	315S/M	827.74	7.3	2.5	2.6	3.77391	31/68	1010	77	1485	93.3	94.7	95.1	0.78	0.85	0.88	228
160	220	315S/M	1044.1	7	2.4	2.7	3.77391	22/48	1010	77	1480	93.3	95.1	95.5	0.75	0.83	0.87	278
200	270	315B	1277.08	6.8	1.9	2.9	4.0216	33/73	1240	79	1485	93.8	95	95	0.68	0.77	0.81	375
200	270	355M/L	1272.8	6.6	2.3	2.2	6.34151	44/97	1525	79	1490	94.8	95.2	95.4	0.78	0.85	0.87	348
250	340	315B	1613.61	6.2	1.8	2.6	5.1713	29/64	1330	79	1480	94.5	95.2	95.2	0.72	0.8	0.83	457
250	340	355M/L	1602.78	6.9	2.2	2.5	7.57882	36/79	1615	79	1490	94.3	95.2	95.8	0.8	0.86	0.88	428
HIGH OUTPUT DESIGN																		
75	100	250S/M	474.59	7.2	2.4	2.6	1.15478	12/26	510	70	1480	92.5	93.6	93.7	0.77	0.85	0.87	133
110	150	280S/M	709.49	7.1	2.3	2.6	2.81036	27/59	865	76	1485	92.8	94.4	94.4	0.78	0.85	0.88	191

Notes:
**Class "F" insulation with ΔT105K*
Standard voltage, connection and frequency: 220-240V Δ 50Hz *380-415V Δ 50Hz*
380-415V Y 50Hz *660-690V Y 50Hz*
The values shown are subject to change without prior notice. To obtain guaranteed values please access our website.

Ex nA - Non Sparking Motors - Cast Iron Frame
Improved Efficiency EFF2

Output		380 V								415 V							
		Rated speed	% of full load						Full load current	Rated speed	% of full load						Full load current
			Efficiency η			Power Factor (Cos φ)					Efficiency η			Power Factor (Cos φ)			
kW	HP	(rpm)	50	75	100	50	75	100	I_n (A)	(rpm)	50	75	100	50	75	100	I_n (A)
II Pole - 3000 rpm																	
0,12	0,16	2730	60	66	67	0,56	0,69	0,79	0,344	2790	55	63	63	0,48	0,61	0,71	0,373
0,18	0,25	2700	65	69	69	0,66	0,79	0,83	0,478	2760	62	68	70	0,58	0,73	0,78	0,459
0,25	0,33	2700	65,5	69,5	70	0,62	0,75	0,83	0,654	2755	62,5	67,5	71,9	0,55	0,68	0,77	0,628
0,37	0,5	2790	70,5	73,8	74,3	0,68	0,8	0,88	0,86	2825	67,5	73,8	74,5	0,6	0,74	0,82	0,843
0,55	0,75	2760	73,5	76,7	76,5	0,73	0,82	0,88	1,24	2810	71,5	76,5	76,7	0,64	0,77	0,84	1,19
0,75	1	2770	77	80,5	79,8	0,76	0,85	0,88	1,62	2805	76	80,5	80,5	0,7	0,79	0,84	1,54
1,1	1,5	2800	82	83,2	82,8	0,69	0,8	0,86	2,35	2835	80	82,5	83,5	0,58	0,72	0,81	2,26
1,5	2	2845	83,6	84,8	84,3	0,73	0,83	0,87	3,11	2870	82,8	84,8	84,6	0,64	0,77	0,83	2,97
2,2	3	2855	84,5	86	86	0,69	0,8	0,86	4,52	2875	83,5	86	86,6	0,58	0,72	0,8	4,42
3	4	2890	85	86,7	87,5	0,77	0,85	0,88	5,92	2900	84	86,7	88	0,69	0,81	0,86	5,51
4	5,5	2890	87,5	88,3	88,3	0,77	0,85	0,89	7,73	2910	86,5	88,3	88,5	0,68	0,81	0,86	7,31
5,5	7,5	2930	89	90,3	90,2	0,75	0,83	0,87	10,6	2940	88	89,8	90	0,68	0,78	0,84	10,1
7,5	10	2920	89	90,5	90,6	0,75	0,84	0,88	14,3	2930	88	90,6	90,9	0,7	0,8	0,86	13,3
9,2	12,5	2930	89	91	91	0,76	0,85	0,89	17,3	2940	88	90,8	91	0,66	0,77	0,85	16,5
11	15	2945	90,5	92	92,2	0,74	0,83	0,87	20,8	2955	89,5	91,8	92,2	0,66	0,77	0,83	20
15	20	2940	91,5	92	92,4	0,78	0,85	0,87	28,4	2950	90,5	91,9	92,4	0,7	0,8	0,85	26,6
18,5	25	2940	92,1	92,8	93	0,76	0,84	0,87	34,7	2950	91,7	92,7	93	0,7	0,8	0,83	33,3
22	30	2945	92,8	93,5	93,5	0,79	0,86	0,89	40,2	2955	92,2	93,5	93,7	0,73	0,82	0,85	38,4
30	40	2955	93	93,7	93,8	0,81	0,86	0,88	55,2	2965	92,6	93,7	94,1	0,74	0,82	0,86	51,6
37	50	2955	93,4	94	94,4	0,8	0,86	0,88	67,7	2965	93	94	94,6	0,72	0,82	0,86	63,3
45	60	2965	93,9	94,5	94,5	0,84	0,89	0,91	79,5	2970	93,3	94,5	94,6	0,8	0,87	0,89	74,4
55	75	2960	94,2	94,7	94,7	0,87	0,9	0,92	95,9	2970	93,8	95	95	0,83	0,88	0,9	89,5
75	100	2970	93,4	94,4	95,4	0,85	0,88	0,9	133	2975	93	94,4	95,5	0,81	0,86	0,88	124
90	125	2975	94,3	95,5	95,8	0,84	0,89	0,9	159	2980	93,9	95,5	95,8	0,8	0,87	0,89	147
110	150	2970	94,6	95,4	95,7	0,84	0,88	0,9	194	2975	94,2	95,2	95,8	0,8	0,86	0,88	182
132	175	2970	94,5	95,5	96	0,84	0,89	0,9	232	2975	94,1	95,4	96	0,8	0,87	0,89	215
150	200	2970	95	95,8	96,1	0,86	0,9	0,91	261	2975	95	95,8	96,2	0,82	0,88	0,9	241
160	220	2965	95	95,9	96,1	0,86	0,9	0,91	278	2975	94,9	96	96,2	0,83	0,88	0,89	260
185	250	2970	95,2	95,9	96,2	0,82	0,89	0,89	328	2975	94,8	95,8	96,2	0,78	0,84	0,87	308
200	270	2980	93,9	95,2	95,5	0,9	0,92	0,92	346	2985	93,5	95,1	95,6	0,88	0,9	0,91	320
220	300	2985	95,5	96,2	96,4	0,87	0,91	0,92	377	2990	95	96	96,3	0,83	0,89	0,91	349
250	340	2980	95,5	96,3	96,4	0,89	0,92	0,93	424	2985	95,4	96,3	96,4	0,86	0,91	0,92	392
HIGH-OUTPUT DESIGN																	
75	100	2960	93,2	94,3	94,3	0,85	0,89	0,91	133	2965	92,8	94,3	94,6	0,81	0,87	0,9	123
110	150	2970	94,6	95,4	95,7	0,84	0,88	0,9	194	2975	94,2	95,2	95,8	0,8	0,86	0,88	182
IV Pole - 1500 rpm																	
0.12	0.16	1405	47	55	59	0.49	0.6	0.7	0.441	1425	42	52	58	0.43	0.52	0.63	0.457
0.18	0.25	1385	55.8	60.5	62.5	0.55	0.67	0.76	0.576	1410	51	57.5	61	0.48	0.59	0.69	0.595
0.25	0.33	1400	70	72	72.5	0.53	0.65	0.72	0.728	1420	67	71	73	0.47	0.58	0.68	0.701
0.37	0.5	1385	70	73	73.6	0.52	0.65	0.73	1.05	1405	65	71	73.2	0.44	0.56	0.67	1.05
0.55	0.75	1420	70	73.5	75	0.61	0.73	0.81	1.38	1440	67	72.5	74.6	0.53	0.66	0.75	1.37
0.75	1	1400	75	76.5	76	0.66	0.78	0.85	1.76	1430	72	76	76.2	0.59	0.71	0.81	1.69
1.1	1.5	1415	77.5	80.5	80.5	0.63	0.74	0.81	2.56	1435	74.5	79	80.3	0.53	0.64	0.74	2.58
1.5	2	1410	81.2	82.2	81	0.68	0.8	0.85	3.31	1430	79.3	81.5	81.8	0.61	0.74	0.81	3.15
2.2	3	1410	81.5	82	81.7	0.69	0.81	0.85	4.81	1430	80.5	82.3	83	0.61	0.75	0.81	4.55
3	4	1400	84	84.9	84.2	0.72	0.82	0.87	6.22	1420	83.2	85.1	84.9	0.65	0.77	0.84	5.85
4	5.5	1420	86.5	87.5	86.7	0.74	0.84	0.89	7.88	1440	85.2	87.2	86.7	0.67	0.78	0.84	7.64
5.5	7.5	1460	86.7	88.3	88.3	0.73	0.82	0.87	10.9	1470	84.2	87	88.4	0.64	0.75	0.83	10.4
7.5	10	1465	87	88.6	88.4	0.75	0.84	0.88	14.6	1470	85.6	88	88.6	0.65	0.77	0.83	14.2
9.2	12.5	1450	86.5	87.8	88.2	0.73	0.82	0.85	18.6	1460	85.5	87.4	88.8	0.64	0.76	0.82	17.6
11	15	1450	88.3	89.6	89.2	0.74	0.82	0.85	22	1460	86.8	89	89.8	0.65	0.76	0.82	20.8
15	20	1450	89.5	90.5	90.1	0.73	0.82	0.86	29.4	1460	88.4	90.3	90.6	0.67	0.78	0.83	27.8
18.5	25	1465	90.3	91.7	91.7	0.72	0.81	0.85	36.1	1470	89.3	91.3	92.1	0.65	0.76	0.82	34.1
22	30	1465	91.5	92.4	92.3	0.72	0.81	0.85	42.6	1475	90.5	92	92.5	0.63	0.75	0.81	40.8
30	40	1470	92.2	93	92.6	0.78	0.84	0.86	57.2	1480	91.5	93	93.2	0.72	0.8	0.84	53.3
37	50	1475	91.6	92.4	92.5	0.79	0.86	0.89	68.3	1480	90.8	92.1	92.9	0.72	0.83	0.87	63.7
45	60	1475	91.3	92.8	93.5	0.8	0.87	0.89	82.2	1480	91	92.9	93.5	0.72	0.83	0.87	77
55	75	1475	92.8	93.5	93.4	0.83	0.88	0.91	98.3	1480	92.5	93.4	93.6	0.77	0.85	0.89	91.9
75	100	1480	92.8	93.9	94.2	0.83	0.87	0.88	137	1485	92.2	93.8	94.3	0.8	0.85	0.87	127
90	125	1480	92.6	94.1	94.2	0.82	0.87	0.89	163	1485	92	93.9	94.2	0.78	0.85	0.88	151
110	150	1480	92.8	93.6	94.2	0.8	0.86	0.88	202	1485	92.8	94.4	94.5	0.76	0.83	0.87	186
132	175	1480	93.5	94.9	95.1	0.81	0.86	0.89	237	1485	93.3	94.7	95.1	0.76	0.84	0.87	222
160	220	1480	93	95	95.4	0.78	0.85	0.88	290	1485	94.2	95.1	95.5	0.73	0.82	0.86	271
200	270	1480	94.2	95.1	95	0.72	0.8	0.82	390	1485	93.4	94.8	95	0.64	0.74	0.8	366
200	270	1485	94.8	95	95.2	0.8	0.86	0.88	363	1490	94.5	95.1	95.3	0.76	0.84	0.86	339
250	340	1480	95	95.4	95.2	0.76	0.83	0.85	469	1485	94	95	95.1	0.67	0.77	0.81	452
250	340	1485	94.5	95.2	95.7	0.82	0.87	0.89	446	1490	94.1	95	95.7	0.77	0.85	0.87	418
HIGH OUTPUT DESIGN																	
75	100	1475	92.6	93.4	93.5	0.8	0.86	0.88	138	1480	92.6	93.7	93.6	0.74	0.84	0.87	128
110	150	1480	92.8	93.6	94.2	0.8	0.86	0.88	202	1485	92.8	94.4	94.5	0.76	0.83	0.87	186

Ex nA - Non Sparking Motors - Cast Iron Frame
Improved Efficiency EFF2

Output		IEC Frame	Full load torque C_n (Nm)	Locked rotor current I_l/I_n	Locked rotor torque T_l/T_n	Break-down torque T_b/T_n	Inertia J kgm^2	Allowable locked rotor time Hot/Cold (s)	Weight (kg)	Sound dB (A)	Rated speed (rpm)	400 V						Full load current I_n (A)
												% of full load						
												Efficiency η			Power Factor (Cos φ)			
kW	HP											50	75	100	50	75	100	
VI Pole - 1000 rpm																		
0.12	0.16	63	1.25	3.5	2.0	1.9	0.00067	41/90	8	43	910	42.0	50.0	54.5	0.46	0.55	0.65	0.49
0.18	0.25	71	1.96	3.3	1.9	2.0	0.00079	50/110	11	43	905	46.0	54.0	57.0	0.46	0.55	0.62	0.74
0.25	0.33	71	2.60	3.5	2.0	2.0	0.00096	43/95	12	43	900	53.0	60.5	64.0	0.40	0.50	0.57	0.99
0.37	0.5	80	3.82	4.5	2.2	2.2	0.00242	12/26	14	43	930	54.0	62.5	65.0	0.45	0.57	0.67	1.23
0.55	0.75	80	5.73	4.5	2.0	2.0	0.00311	10/22	16	43	930	60.0	65.0	67.0	0.50	0.63	0.73	1.62
0.75	1	90S	7.72	4.8	1.9	1.9	0.00504	16/35	21	45	920	70.0	72.6	72.4	0.54	0.67	0.76	1.97
1.1	1.5	90L	11.5	4.8	2.1	2.0	0.00672	14/31	23	45	925	71.0	75.2	75.2	0.50	0.64	0.75	2.82
1.5	2	100L	15.1	4.8	2.0	2.2	0.01121	18/40	29	44	940	74.0	77.3	77.5	0.53	0.66	0.74	3.78
2.2	3	112M	22.7	5.0	2.0	2.1	0.01682	14/31	35	48	940	77.5	80.5	80.1	0.53	0.66	0.74	5.36
3	4	132S	29.4	5.3	1.8	2.0	0.03489	20/44	55	52	960	80.0	82.7	82.5	0.58	0.70	0.77	6.82
4	5.5	132M	40.5	6.0	1.9	2.1	0.05039	18/40	65	52	960	83.6	85.5	85.8	0.59	0.70	0.77	8.74
5.5	7.5	132M	55.2	6.4	2.0	2.2	0.06202	14/31	73	52	960	84.0	85.8	85.8	0.56	0.68	0.76	12.2
7.5	10	160M	72.8	6.1	2.0	2.4	0.12209	17/37	103	56	970	87.0	88.2	88.0	0.62	0.74	0.81	15.2
11	15	160L	109	6.6	2.2	2.6	0.17595	13/29	129	56	970	87.2	88.3	88.3	0.62	0.75	0.82	21.9
15	20	180L	146	7.5	2.3	2.4	0.30337	11/24	181	56	965	89.1	90.1	89.8	0.82	0.88	0.91	26.5
18.5	25	200L	181	6.0	2.1	2.3	0.37670	33/73	219	58	975	89.3	90.5	89.9	0.70	0.79	0.84	35.4
22	30	200L	217	6.0	2.1	2.2	0.41258	33/73	228	58	975	89.0	90.9	91.3	0.70	0.79	0.84	41.4
30	40	225S/M	287	7.2	2.4	2.5	0.98842	20/44	366	61	985	90.5	91.8	91.8	0.77	0.84	0.87	54.2
37	50	250S/M	358	7.5	2.5	2.4	1.22377	18/40	440	61	980	90.0	92.4	92.5	0.76	0.84	0.87	66.4
45	60	280S/M	428	6.8	2.2	2.4	2.29824	24/53	610	66	985	90.5	92.3	92.6	0.68	0.78	0.83	84.5
55	75	280S/M	535	6.5	2.1	2.3	2.64298	23/51	655	66	985	91.6	93.2	93.5	0.71	0.82	0.85	100
75	100	315S/M	713	6.7	2.1	2.3	3.44737	20/44	775	69	985	91.6	93.5	93.7	0.71	0.81	0.85	136
90	125	315S/M	891	6.3	1.9	2.1	3.67719	18/40	818	69	985	92.5	94.0	93.9	0.73	0.81	0.85	163
110	150	315S/M	1070	6.4	2.1	2.2	5.28596	18/40	990	69	985	93.4	94.5	94.6	0.71	0.80	0.84	200
132	175	355M/L	1242	6.1	1.8	2.1	8.10159	90/198	1385	73	990	92.5	94.7	94.7	0.65	0.75	0.80	251
160	220	315B	1561	7.0	1.7	2.2	7.10000	25/55	1350	69	990	93.5	94.9	94.9	0.68	0.78	0.82	297
160	220	355M/L	1561	6.2	1.7	1.9	9.53128	72/158	1485	73	990	93.0	95.0	95.4	0.67	0.77	0.82	295
200	270	315B	1916	6.6	1.8	2.3	8.60380	19/42	1419	69	990	94.8	95.2	95.0	0.71	0.80	0.84	362
200	270	355M/L	1916	6.3	1.9	2.1	12.39067	85/187	1700	73	990	93.5	94.5	94.8	0.70	0.78	0.81	376
250	340	355M/L	2400	6.1	2.0	2.0	14.77349	64/141	1830	73	995	94.0	95.1	95.6	0.70	0.79	0.82	460
HIGH OUTPUT DESIGN																		
45	60	250S/M	430.04	8	2.8	2.8	1.55324	18/40	490	61	980	91	92.3	92.6	0.76	0.84	0.87	79.7
75	100	280S/M	713.09	6.7	2.3	2.5	3.44737	20/44	775	66	985	91.6	93.5	93.7	0.71	0.81	0.85	136
VIII Pole - 750 rpm																		
0.12	0.16	71	2.5	1.64	1.9	2.1	0.00079	44/97	12.1	41	685	36	44.2	47.2	0.4	0.49	0.56	0.655
0.18	0.25	80	3.1	2.51	1.9	2.1	0.00242	16/35	13.7	42	700	40	49	54.2	0.43	0.53	0.62	0.773
0.25	0.33	80	3	3.41	1.8	1.8	0.00294	21/46	14.8	42	680	47.5	55	57	0.45	0.56	0.65	0.974
0.37	0.5	90S	3.5	5.05	2.1	2.1	0.00448	29/64	18	43	695	51	59	61	0.43	0.53	0.64	1.37
0.55	0.75	90L	3.5	7.63	2.1	2.1	0.00616	21/46	21.5	43	690	57	63	65	0.45	0.56	0.65	1.88
0.75	1	100L	4.2	9.96	2	2.1	0.00952	30/66	27.5	50	705	65	70	71	0.42	0.54	0.63	2.42
1.1	1.5	100L	4.1	15.05	1.7	2.1	0.01289	23/51	30.5	50	700	66	71.5	72.2	0.43	0.56	0.65	3.38
1.5	2	112M	4.6	19.79	2.5	2.7	0.0243	32/70	43	46	710	76.5	77.8	78	0.48	0.6	0.69	4.02
2.2	3	132S	6.2	29.47	2.4	2.7	0.07527	23/51	70	48	715	78.5	81.5	82.5	0.53	0.65	0.73	5.27
3	4	132M	5.8	39.57	2.4	2.7	0.08531	22/48	75	48	710	78	82.7	83.5	0.52	0.64	0.72	7.2
4	5.5	160M	5.2	52.92	2.2	2.7	0.12209	33/73	105	51	730	81.3	84.3	86	0.47	0.6	0.69	9.73
5.5	7.5	160M	5.2	72.16	2.3	2.7	0.14364	23/51	114	51	730	81.5	84.1	85.2	0.46	0.59	0.69	13.5
7.5	10	160L	4.9	96.88	2	2.5	0.16518	15/33	127	51	725	83.5	85.7	85.5	0.51	0.63	0.72	17.6
9.2	12.5	180M	6.7	120.27	2.2	2.9	0.23443	11/24	163	51	730	83	86	85.9	0.64	0.75	0.81	19.1
11	15	180L	6.8	145.32	2.3	2.5	0.2758	11/24	167.6	51	725	87	88.5	88.3	0.68	0.79	0.84	21.4
15	20	200L	4.6	192.44	2	2.1	0.3767	23/51	225.4	53	730	86.5	88.6	89	0.56	0.68	0.75	32.4
18.5	25	225S/M	6.9	240.55	2.1	2.8	0.84722	17/37	341	56	730	88.5	90.1	90	0.72	0.8	0.85	34.9
22	30	225S/M	7.5	288.66	2.2	2.7	0.98842	19/42	364.8	56	730	89	91	91	0.73	0.82	0.85	41.1
30	40	250S/M	7.9	384.87	2.3	2.9	1.22377	17/37	440	56	730	89.5	91.2	91.6	0.7	0.79	0.84	56.3
37	50	280S/M	6.5	474.59	1.9	2.3	2.29824	29/64	590	59	740	90.5	92.2	92.3	0.67	0.77	0.81	71.4
45	60	280S/M	6.5	569.51	2	2.4	2.64298	26/57	643	59	740	90.5	92.1	92.3	0.65	0.75	0.8	88
55	75	315S/M	6.5	711.89	1.9	2.2	3.10263	27/59	745	62	740	91.2	93.1	93	0.69	0.78	0.82	104
75	100	315S/M	6.6	949.18	1.9	2.2	4.36666	20/44	876	62	740	92	93.4	93.5	0.67	0.79	0.82	141
90	125	315S/M	6.8	1186.48	2.1	2.4	5.28596	23/51	970	62	740	92.5	93.8	94.2	0.7	0.78	0.83	166
110	150	355M/L	6.4	1423.78	1.5	2.2	11.9324	41/90	1390	70	740	92.5	94.1	94.5	0.63	0.74	0.8	210
132	175	315B	6.9	1661.07	1.9	2.6	7.7650	20/44	1399	62	740	94	94.5	94.4	0.63	0.74	0.79	255
132	175	355M/L	6.5	1661.07	1.6	2.2	13.18845	47/103	1445	70	740	93	94.5	94.8	0.63	0.73	0.79	254
160	220	315B	7.3	2088.2	2.1	2.8	9.75032	18/40	1534	62	740	93.1	94.7	94.7	0.6	0.72	0.77	317
160	220	355M/L	6.6	2088.2	1.6	2.2	16.32856	42/92	1620	70	740	93.3	94.7	94.7	0.64	0.75	0.8	305
200	270	355M/L	6.8	2562.8	1.6	2.1	19.46866	37/81	1830	70	740	93.3	94.6	95.2	0.6	0.72	0.79	384
HIGH OUTPUT DESIGN																		
55	75	280S/M	6.5	711.89	1.9	2.2	3.10263	27/59	745	59	740	91.2	93.1	93	0.69	0.78	0.82	104

Notes:
**Class "F" insulation with ΔT105K*
Standard voltage, connection and frequency: 220-240V Δ 50Hz *380-415V Δ 50Hz*
380-415V Y 50Hz *660-690V Y 50Hz*
The values shown are subject to change without prior notice. To obtain guaranteed values please access our website.

Ex nA - Non Sparking Motors - Cast Iron Frame
Improved Efficiency EFF2

Output		380 V								415 V							
		Rated speed (rpm)	% of full load						Full load current I_n (A)	Rated speed (rpm)	% of full load						Full load current I_n (A)
			Efficiency η			Power Factor (Cos φ)					Efficiency η			Power Factor (Cos φ)			
kW	HP		50	75	100	50	75	100			50	75	100	50	75	100	
VI Pole - 1000 rpm																	
0.12	0.16	900	45	52	55.5	0.49	0.58	0.68	0.483	915	39	48	53	0.43	0.52	0.62	0.508
0.18	0.25	895	49	55.5	57.5	0.49	0.59	0.65	0.732	910	43	52	56.5	0.44	0.52	0.59	0.751
0.25	0.33	890	56	63	65.3	0.44	0.55	0.61	0.954	905	50	58	62.5	0.37	0.46	0.54	1.03
0.37	0.5	920	56	64	66	0.49	0.62	0.72	1.18	935	52	61	64	0.42	0.54	0.64	1.26
0.55	0.75	920	62	65.8	68	0.54	0.67	0.77	1.6	935	58	64	66	0.47	0.59	0.68	1.7
0.75	1	910	71.5	72.8	71.5	0.58	0.71	0.79	2.02	930	68.5	72.4	72.4	0.5	0.64	0.73	1.97
1.1	1.5	915	72	75.5	74.8	0.55	0.69	0.78	2.86	935	70	75.2	75.2	0.46	0.61	0.72	2.83
1.5	2	930	75	77.5	77	0.58	0.7	0.76	3.89	950	73	77.3	77.6	0.5	0.63	0.71	3.79
2.2	3	930	79	80.8	79.7	0.58	0.7	0.76	5.52	950	76	80.3	80.5	0.5	0.63	0.72	5.28
3	4	955	81	83	82	0.61	0.72	0.79	7.04	965	79	82.5	82.6	0.53	0.66	0.74	6.83
4	5.5	955	84.5	85.7	85.4	0.61	0.72	0.79	9.01	965	82.6	85.3	85.9	0.56	0.67	0.75	8.64
5.5	7.5	955	85	86.1	85.6	0.58	0.7	0.77	12.7	965	83	85.5	86	0.5	0.62	0.71	12.5
7.5	10	965	87.5	88.4	87.5	0.66	0.78	0.83	15.7	970	86.5	88	88	0.58	0.71	0.79	15
11	15	970	88	88.5	88	0.67	0.78	0.84	22.6	975	86.5	88	88.3	0.58	0.72	0.8	21.7
15	20	960	89	90	89.5	0.82	0.89	0.91	28	970	89	90.5	90.5	0.78	0.87	0.9	25.6
18.5	25	970	90	90.5	89.8	0.76	0.84	0.87	36	980	89.3	90.5	90.5	0.72	0.8	0.84	33.9
22	30	970	89.6	91	91.2	0.74	0.82	0.85	43.1	980	88.4	90.7	91.3	0.66	0.76	0.82	40.9
30	40	980	91	91.8	91.6	0.8	0.86	0.88	56.5	985	90	91.8	92.2	0.73	0.81	0.86	52.6
37	50	980	90.5	92.5	92.4	0.8	0.86	0.88	69.1	985	89.5	92.4	92.6	0.73	0.82	0.86	64.6
45	60	985	91	92.3	92.6	0.72	0.81	0.85	86.9	990	90	92.3	92.7	0.64	0.76	0.82	82.4
55	75	985	92	93.2	93.4	0.74	0.84	0.87	103	990	91.2	93.2	93.6	0.68	0.8	0.84	97.3
75	100	985	92	93.5	93.5	0.74	0.82	0.86	142	990	91.2	93.5	93.8	0.69	0.8	0.84	132
90	125	985	92.8	93.9	93.6	0.74	0.83	0.86	170	990	92.2	93.9	93.9	0.69	0.79	0.84	159
110	150	985	93.6	94.3	94.3	0.74	0.82	0.85	208	985	93.2	94.5	94.6	0.69	0.79	0.83	195
132	175	990	93	94.7	94.5	0.7	0.8	0.82	259	995	92	94.7	94.7	0.6	0.7	0.77	252
160	220	990	94	94.9	94.7	0.72	0.81	0.84	306	990	93	94.9	94.9	0.64	0.75	0.8	293
160	220	990	93.5	95.2	95.2	0.73	0.8	0.84	304	990	92.5	94.9	95.4	0.63	0.74	0.8	292
200	270	990	95.1	95.3	94.9	0.75	0.82	0.85	377	990	94.4	95.1	95	0.67	0.78	0.83	353
200	270	990	94	94.7	94.8	0.74	0.81	0.83	386	990	93	94.3	94.8	0.66	0.75	0.79	372
250	340	995	94.3	95.2	95.5	0.74	0.81	0.83	479	995	93.7	95	95.8	0.67	0.77	0.81	448
HIGH OUTPUT DESIGN																	
45	60	980	91.5	92.3	92.5	0.79	0.86	0.88	83	985	90.5	92.3	92.7	0.73	0.82	0.86	77.6
75	100	985	92	93.5	93.5	0.74	0.82	0.86	142	990	91.2	93.5	93.8	0.69	0.8	0.84	132
VIII Pole - 750 rpm																	
0.12	0.16	675	40	48	50	0.44	0.52	0.6	0.608	695	32	40.5	45	0.37	0.47	0.53	0.7
0.18	0.25	690	43	52	54.5	0.45	0.56	0.65	0.772	710	37	46	53	0.41	0.5	0.59	0.801
0.25	0.33	670	50.5	56.5	56.5	0.48	0.59	0.69	0.974	690	45	53.5	56.5	0.42	0.53	0.61	1.01
0.37	0.5	685	54	61	62	0.46	0.56	0.67	1.35	700	48	57	60	0.4	0.5	0.6	1.43
0.55	0.75	680	59	64.5	65.5	0.48	0.59	0.69	1.85	700	55	61.5	64.5	0.41	0.52	0.61	1.94
0.75	1	695	67	71	70.5	0.46	0.58	0.66	2.45	710	63	69	70.5	0.38	0.5	0.6	2.47
1.1	1.5	690	68	72	72	0.47	0.6	0.68	3.41	710	64	70.5	72.2	0.4	0.52	0.62	3.42
1.5	2	700	77.5	78	77.7	0.52	0.63	0.7	4.19	715	74.5	77	78.1	0.46	0.58	0.66	4.05
2.2	3	710	79.5	81.8	82.1	0.56	0.68	0.75	5.43	720	77.5	81.2	82.6	0.5	0.62	0.71	5.22
3	4	705	79.5	83	83	0.54	0.66	0.74	7.42	715	76.5	82.4	83.5	0.5	0.62	0.7	7.14
4	5.5	725	82.6	84.8	85.9	0.51	0.64	0.72	9.83	730	80	83.7	86	0.44	0.57	0.66	9.8
5.5	7.5	725	82.5	84.7	85.2	0.5	0.63	0.72	13.6	730	80.5	83.5	85	0.42	0.55	0.66	13.6
7.5	10	720	84.5	86	85.3	0.54	0.66	0.74	18.1	730	82.5	85.5	85.5	0.48	0.6	0.7	17.4
9.2	12.5	725	84	86.1	85.5	0.69	0.79	0.84	19.5	730	82	85.9	85.9	0.59	0.72	0.79	18.9
11	15	720	87.5	88.3	87.8	0.71	0.81	0.85	22.4	730	86.5	88.6	88.5	0.65	0.77	0.83	20.8
15	20	725	87.5	88.9	88.9	0.61	0.72	0.77	33.3	730	85.5	88.3	88.9	0.5	0.64	0.72	32.6
18.5	25	730	88.8	90	89.8	0.75	0.83	0.86	36.4	735	88.2	90.3	90.2	0.68	0.78	0.84	34
22	30	730	89.4	90.9	90.5	0.76	0.84	0.86	42.9	735	88.6	91	91.2	0.71	0.8	0.84	40
30	40	730	90	91.3	91.3	0.73	0.81	0.85	58.7	735	89	91.1	91.8	0.66	0.77	0.83	54.8
37	50	735	91	92.2	92.1	0.7	0.79	0.82	74.4	740	90	92.2	92.4	0.64	0.75	0.79	70.5
45	60	735	91	92.2	92	0.7	0.77	0.82	90.6	740	90	92	92.3	0.6	0.72	0.78	87
55	75	735	91.6	93.2	92.8	0.72	0.8	0.83	108	740	90.7	93	93	0.65	0.76	0.8	103
75	100	735	92.4	93.3	93.3	0.7	0.8	0.83	147	740	91.6	93.4	93.4	0.64	0.78	0.81	138
90	125	735	92.9	93.9	94	0.73	0.81	0.84	173	740	92.1	93.7	94.2	0.67	0.75	0.81	164
110	150	740	93	94.2	94.5	0.66	0.77	0.82	216	745	92	94.1	94.5	0.6	0.71	0.78	208
132	175	740	94.6	94.8	94.3	0.68	0.77	0.81	263	745	93.4	94.2	94.4	0.59	0.71	0.77	253
132	175	740	93.5	94.6	94.8	0.66	0.75	0.81	261	745	92.5	94.4	94.8	0.6	0.71	0.77	252
160	220	740	93.6	94.9	94.6	0.66	0.75	0.79	325	745	92.5	94.7	94.7	0.56	0.68	0.75	313
160	220	740	93.8	94.8	94.8	0.68	0.77	0.81	317	745	92.8	94.7	94.7	0.6	0.72	0.79	298
200	270	740	93.8	94.8	95.1	0.65	0.75	0.81	394	745	92.8	94.4	95.2	0.56	0.69	0.77	380
HIGH OUTPUT DESIGN																	
55	75	735	91.6	93.2	92.8	0.72	0.8	0.83	108	740	90.7	93	93	0.65	0.76	0.8	103

Ex nA - Non Sparking Motors
Cast Iron Frame
Premium Efficiency EFF1

Standard Features:

- Three-phase, multivoltage, IP55, TEFC
- Output: 0.12 up to 250kW
- Frames: 63 up to 355M/L
- Voltage: 220-240/380-415V (up to 100L)
  380-415/660V (from 112M and up)
- Class “F” insulation (ΔT=80K)
- Continuous duty: S1
- Design N
- Ambient temperature: 40°C, at 1000 m.a.s.l.
- Squirrel cage rotor/Aluminium die cast
- V’Ring seal
- Temperature classification:
  - Zone 2: class of temperature T3
  - Zone 22: maximum motor guaranteed external surface temperature T125°C.
  Temperature limitation due to the presence of dust clouds (for materials with ignition temperature above 125° C) and presence of dust layers (up to 5mm).
  Note: On VFD Application, motor temperature class is ΔT = 160° C, marking: CE Ex II 3D T160°C
- Fan: Conductive plastic (63-315 frames)
  Aluminium (355 frames)
- Grease fitting from frame 160
- Plastic thread plug
- Increased safety terminal box
- Ground lug inside the terminal box
- Color: RAL 5009

Options Available:

Options Available:
- Degree of Protection: IP56, IP65 or IP66(W)
- Sealed Bearings on frames 160 up to 200
- Cable glands
- Other paint options

More options available, on request

Typical Applications:

Typical Applications:
These motors are used in environment where an explosive atmosphere will probably not be present under normal operating conditions and, if any, this will be for short periods of time:
- Pumps
- Fans
- Conveyor belts
- Machine tools
- Mills
- Centrifugal machines
- Presses
- Elevators
- Looms
- Grinders
- Woodworking
- Cooling
- Packaging equipment
- Other severe duty applications where the environments are classified as Zone 2, groups IIA, IIB and IIC.

Terminal Box
Made of cast iron made with plenty of internal space. The terminal box can be rotated in 90º intervals, having one or two threaded holes to connect the power supply cables. Power supply connection components are certified, then reducing short-circuit inside the terminal box. Designed in such a way that the energized components remain at a minimum safe distance from grounded components parts. In order to allow end users safety, the Ex "n" motors are designed with grounding lug inside and outside of the terminal box, with the inside grounding lugs duly connected from the factory. * Available as top or side mounted.

Bearings
WEG motors are fitted with the highest quality bearings selected from the best manufacturers in the world and designed to ensure long life of the motor even under heavy operating conditions.

Fan Cover
Made of steel plate for frames 63 up to 132M and of cast iron for frames 160M and above. It offers a superior mechanical rigidity, corrosion-resistance and extended lifetime.

Winding
The wire is enameled with class H varnish. Supplied with patented WISE (WEG Insulation System Evolution), which allows three times longer motor lifetime designed to operate in environments with excess of moisture and suitable for VFD application. The winding is designed to obtain the minimal Joule losses and temperature rise.

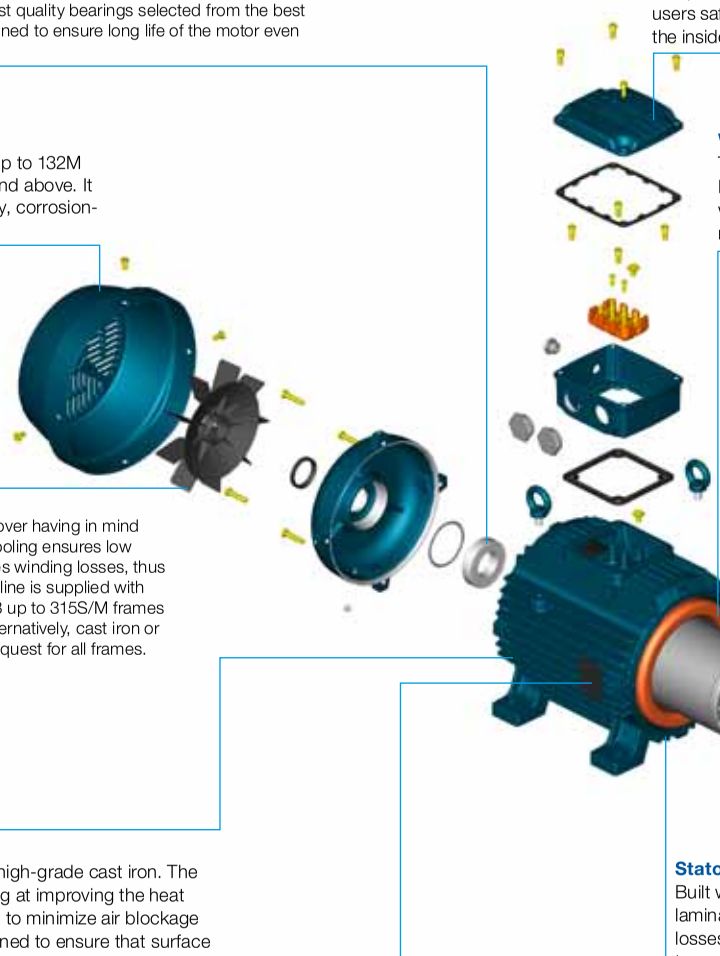

Rotor
High pressure die cast rotor dynamically balanced, thus reducing vibrations. Built with premium electrical grade steel lamination to improve efficiency. Designed to meet performance and surface temperature standard requirements (as long as it is kept below the ignition temperature of the possible present gas).

Shaft
WEG uses SAE/AISI 1040/45 steel as standard, which provides high mechanical strength, preventing bending under load and minimizes fatigue which extends lifetime. Specially designed to withstand torques caused during motor acceleration and deceleration. It´s size is larger than the standard motor and, upon special design, motor can have second shaft end.

Fan
WEG has designed the fan and fan cover having in mind the lowest noise level. The efficient cooling ensures low motor temperature rise. This minimizes winding losses, thus increasing motor efficiency. The W21 line is supplied with anti-static polypropylene fans from 63 up to 315S/M frames and aluminium for 355M/L frame.. Alternatively, cast iron or aluminium fans can be supplied on request for all frames.

Endshields
Made of cast iron, they are provided with external fins for better temperature dissipation, thus increasing bearing life.

Frame
WEG motors are made of FC-200 high-grade cast iron. The frames are provided with fins aiming at improving the heat dissipation and adequately spaced to minimize air blockage due to build up of dirt. Motor designed to ensure that surface temperature is lower than ignition temperature of the gas that is present in the environment. Mechanical components are designed towithstand an explosion inside the motor without causing any risk to outside areas since there is no flame flame propagation through flame path. The motors can be mounted in any position, horizontal and vertical, withstanding the maximum axial and radial thrusts.

Stator
Built with low loss steel lamination to reduce magnetic losses and operating temperature.

Seals
WEG Explosion Proof Motors are fitted with either Lip seal or Labyrinth Tachonite as standard (see standard features list) to provide the best possible protection.

Nameplate
Stainless steel nameplate ensuring a permanent record of all motor data.

Drain Hole
Provided with plastic drain plug allowing drainage of condensed water.

Ex nA - Non Sparking Motors - Cast Iron Frame
Premium Efficiency EFF1

Output		IEC Frame	Full load torque C_n (Nm)	Locked rotor current I_l/I_n	Locked rotor torque T_l/T_n	Break-down torque T_b/T_n	Inertia J kgm²	Allowable locked rotor time Hot/Cold (s)	Weight (kg)	Sound dB (A)	Rated speed (rpm)	400 V						Full load current I_n (A)
												% of full load						
												Efficiency η			Power Factor (Cos φ)			
kW	HP											50	75	100	50	75	100	
II Pole - 3000 rpm																		
0.12	0.16	63	0.41	5.0	2.5	2.7	0.00012	25/55	7	52	2760	58.0	64.8	65.5	0.51	0.64	0.74	0.36
0.18	0.25	63	0.65	4.4	2.2	2.2	0.00012	30/66	7	52	2730	63.5	68.5	69.5	0.62	0.76	0.81	0.46
0.25	0.33	63	0.86	4.5	2.2	2.2	0.00016	18/40	7	52	2730	64.0	68.5	71.2	0.58	0.71	0.80	0.63
0.37	0.5	71	1.26	5.5	2.7	2.9	0.00037	23/51	11	56	2810	69.0	73.8	74.5	0.63	0.77	0.85	0.84
0.55	0.75	71	1.91	5.7	2.5	2.5	0.00045	16/35	11	56	2790	72.5	76.6	76.7	0.68	0.80	0.86	1.20
0.75	1	80	2.54	6.8	2.8	2.8	0.00079	20/44	14	59	2795	76.5	80.5	80.5	0.73	0.82	0.86	1.56
1.1	1.5	80	3.76	7.8	3.0	3.0	0.00096	15/33	15	59	2820	81.0	83.0	83.6	0.64	0.76	0.84	2.26
1.5	2	90S	4.94	7.3	2.5	2.5	0.00205	14/31	20	65	2860	83.2	84.9	84.5	0.68	0.80	0.85	3.01
2.2	3	90L	7.38	8.4	3.3	3.1	0.00266	9/20	23	68	2865	84.0	86.0	86.6	0.64	0.76	0.83	4.42
3	4	100L	9.72	8.9	2.7	2.8	0.00672	10/22	33	67	2895	84.5	87.0	88.3	0.73	0.83	0.87	5.64
4	5.5	112M	13.4	8.2	2.4	3.0	0.00842	17/37	42	64	2900	87.0	88.4	88.6	0.72	0.83	0.87	7.49
5.5	7.5	132S	18.0	8.0	2.4	2.9	0.02056	19/42	61	68	2935	88.5	90.0	90.1	0.71	0.81	0.86	10.2
7.5	10	132S	24.1	8.0	2.2	2.7	0.02430	13/29	67	68	2925	88.5	90.6	90.8	0.72	0.82	0.87	13.7
11	15	160M	35.8	8.5	2.5	3.0	0.05295	14/31	110	70	2950	90.0	91.9	92.3	0.70	0.80	0.85	20.2
15	20	160M	47.8	8.2	2.2	3.0	0.05883	11/24	115	70	2945	91.0	92.0	92.5	0.74	0.82	0.86	27.2
18.5	25	160L	59.7	8.8	2.2	2.9	0.06766	10/22	136	70	2945	91.9	92.8	93.1	0.73	0.82	0.85	33.7
22	30	180M	71.6	8.6	2.5	3.0	0.11919	14/31	180	70	2950	92.5	93.5	93.7	0.76	0.84	0.87	39.0
30	40	200L	95.1	7.4	2.5	2.6	0.20630	31/68	245	74	2960	92.8	93.7	94.0	0.77	0.84	0.87	52.9
37	50	200L	119	7.6	2.5	2.5	0.22424	25/55	260	74	2960	93.2	94.0	94.6	0.76	0.84	0.87	64.9
45	60	225S/M	142	8.5	2.2	2.7	0.44846	18/40	411	78	2970	93.6	94.5	94.7	0.82	0.88	0.90	76.2
55	75	250S/M	178	8.9	2.4	3.1	0.50227	15/33	490	78	2965	94.0	95.0	95.0	0.85	0.89	0.91	91.8
75	100	280S/M	237	7.7	2.0	2.7	1.27083	51/112	740	79	2975	93.2	94.4	95.6	0.83	0.87	0.89	127
90	125	280S/M	295	8.2	2.0	2.5	1.41204	42/92	780	79	2975	94.1	95.5	95.8	0.82	0.88	0.90	151
110	150	315S/M	355	8.0	2.0	2.5	1.50617	38/84	830	81	2975	94.4	95.3	95.8	0.82	0.87	0.89	186
132	175	315S/M	414	7.8	2.0	2.4	1.74151	32/70	900	81	2975	94.3	95.5	96.0	0.84	0.88	0.89	223
160	220	315S/M	521	7.8	2.0	2.3	2.11806	33/73	1010	81	2970	95.0	96.0	96.2	0.85	0.89	0.90	267
200	270	355M/L	636	7.2	1.6	2.4	4.82631	70/154	1490	91	2985	93.5	95.0	95.4	0.89	0.91	0.92	329
250	340	355M/L	801	7.8	1.5	2.3	5.74561	65/143	1750	91	2985	95.5	96.3	96.4	0.87	0.91	0.92	407
HIGH OUTPUT DESIGN																		
75	100	250S/M	236.9	8.5	3	3.4	0.55609	10/22	490	82	2965	93	94.3	94.6	0.83	0.88	0.9	127
110	150	280S/M	354.15	8	2.3	2.8	1.50617	38/84	830	83	2975	94.4	95.3	95.8	0.82	0.87	0.89	186
IV Pole - 1500 rpm																		
0.12	0.16	63	0.79	4.5	2.6	2.7	0.00045	20/44	8.1	44	1415	56.5	62.5	64.5	0.43	0.55	0.65	0.413
0.18	0.25	63	1.25	4.6	2.6	2.7	0.00056	27/59	8.7	44	1400	58	64	67.5	0.44	0.55	0.66	0.583
0.25	0.33	71	1.66	5	3	3.1	0.00079	48/106	11.9	43	1400	69	73	75	0.5	0.61	0.69	0.697
0.37	0.5	71	2.52	5	2.7	2.8	0.00079	37/81	12	43	1395	69	74	75.5	0.47	0.59	0.69	1.03
0.55	0.75	80	3.68	6	2.6	2.8	0.00242	17/37	15	44	1430	72	77	78	0.56	0.69	0.78	1.3
0.75	1	80	4.95	6	2.6	2.6	0.00328	16/35	16.9	44	1420	76	78.6	80.1	0.62	0.75	0.82	1.65
1.1	1.5	90S	7.29	7	2.6	3	0.0056	14/31	22.2	49	1445	80	83.8	83.8	0.59	0.72	0.8	2.37
1.5	2	90L	9.69	7.5	2.8	3.3	0.00672	12/26	24.6	49	1450	80.5	84.6	85.2	0.54	0.68	0.77	3.3
2.2	3	100L	14.79	7.4	3	3	0.01072	17/37	34.2	53	1425	85.3	86.4	86.4	0.65	0.77	0.83	4.43
3	4	100L	19.65	7.8	2.9	3.3	0.01225	12/26	40.2	53	1430	84.5	86.5	87.5	0.64	0.76	0.83	5.96
4	5.5	112M	26.73	6.6	2.1	2.6	0.01875	12/26	46.4	56	1445	87.1	88.3	88.6	0.66	0.77	0.83	7.85
5.5	7.5	132S	35.96	8.5	2.4	3.1	0.05427	12/26	66.9	56	1465	88	89.6	90.1	0.69	0.79	0.85	10.4
7.5	10	132M	47.95	8.2	2.5	3	0.0659	9/20	77.1	56	1465	89	90	90.4	0.71	0.81	0.86	13.9
9.2	12.5	160M	60.14	5.6	2.3	2.3	0.08029	27/59	110	67	1460	89.6	91	91	0.7	0.8	0.84	17.4
11	15	160M	71.92	6	2.5	2.6	0.10037	19/42	120.5	67	1465	90.3	91.4	91.2	0.68	0.78	0.83	21
15	20	160L	95.89	6.1	2.5	2.6	0.11542	17/37	139.7	67	1465	90.5	91.9	91.8	0.66	0.77	0.83	28.4
18.5	25	180M	119.46	8	2.9	2.9	0.19733	12/26	184.9	64	1470	91.6	93	93.4	0.65	0.76	0.82	34.9
22	30	180L	142.86	7.9	2.8	2.9	0.23321	16/35	199.6	64	1475	92.5	93.5	93.7	0.71	0.81	0.86	39.4
30	40	200L	190.48	7	2.5	2.6	0.33095	18/40	245	69	1475	93	94	93.9	0.67	0.78	0.83	55.6
37	50	225S/M	237.3	7.2	2.2	2.7	0.69987	16/35	369.2	70	1480	93	94	94.1	0.76	0.84	0.87	65.2
45	60	225S/M	284.76	7.4	2.4	3	0.83984	15/33	398.2	70	1480	94	94.5	94.5	0.76	0.83	0.88	78.1
55	75	250S/M	357.15	7.2	2.5	2.8	1.15478	17/37	489.8	70	1475	94.1	94.7	94.6	0.77	0.86	0.89	94.3
75	100	280S/M	472.99	7.2	2.2	2.6	2.16799	38/84	660	70	1485	93.9	95.1	95.2	0.79	0.85	0.88	129
90	125	280S/M	591.24	7.8	2.4	2.6	2.81036	25/55	795	70	1485	94.3	95.1	95.3	0.79	0.85	0.88	155
110	150	315S/M	709.49	7.6	2.4	2.6	3.21184	29/64	860	72	1485	94.5	95.2	95.6	0.8	0.86	0.88	189
132	175	315S/M	827.74	7.8	2.4	2.6	3.77391	25/55	995	72	1485	94.8	95.4	95.7	0.78	0.85	0.88	226
160	220	315S/M	1040.59	7.6	2.4	2.6	3.77391	20/44	1005	72	1485	94.7	95.7	95.9	0.76	0.84	0.87	277
200	270	355M/L	1272.8	6.6	2.1	2.3	6.85703	49/108	1525	79	1490	95.3	95.8	96	0.8	0.86	0.88	342
250	340	355M/L	1602.78	6.9	2.2	2.5	8.12016	36/79	1615	79	1490	95.3	96.3	96.5	0.8	0.86	0.88	425

Notes:
**Class "F" insulation with ΔT105K*
Standard voltage, connection and frequency: 220-240V Δ 50Hz *380-415V Δ 50Hz*
380-415V Y 50Hz *660-690V Y 50Hz*
The values shown are subject to change without prior notice. To obtain guaranteed values please access our website.

Ex nA - Non Sparking Motors - Cast Iron Frame
Premium Efficiency EFF1

Output		380 V								415 V							
		Rated speed (rpm)	% of full load						Full load current I_n (A)	Rated speed (rpm)	% of full load						Full load current I_n (A)
			Efficiency η			Power Factor (Cos φ)					Efficiency η			Power Factor (Cos φ)			
kW	HP		50	75	100	50	75	100			50	75	100	50	75	100	
II Pole - 3000 rpm																	
0.12	0.16	2730	60	66	67	0.56	0.69	0.79	0.344	2790	55	63	63	0.48	0.61	0.71	0.373
0.18	0.25	2700	65	69	69	0.66	0.79	0.83	0.478	2760	62	68	70	0.58	0.73	0.78	0.459
0.25	0.33	2700	65.5	69.5	70	0.62	0.75	0.83	0.654	2755	62.5	67.5	71.9	0.55	0.68	0.77	0.628
0.37	0.5	2790	70.5	73.8	74.3	0.68	0.8	0.88	0.86	2825	67.5	73.8	74.5	0.6	0.74	0.82	0.843
0.55	0.75	2760	73.5	76.7	76.5	0.73	0.82	0.88	1.24	2810	71.5	76.5	76.7	0.64	0.77	0.84	1.19
0.75	1	2770	77	80.5	79.8	0.76	0.85	0.88	1.62	2805	76	80.5	80.5	0.7	0.79	0.84	1.54
1.1	1.5	2800	82	83.2	82.8	0.69	0.8	0.86	2.35	2835	80	82.5	83.5	0.58	0.72	0.81	2.26
1.5	2	2845	83.6	84.8	84.3	0.73	0.83	0.87	3.11	2870	82.8	84.8	84.6	0.64	0.77	0.83	2.97
2.2	3	2855	84.5	86	86	0.69	0.8	0.86	4.52	2875	83.5	86	86.6	0.58	0.72	0.8	4.42
3	4	2890	85	86.7	87.5	0.77	0.85	0.88	5.92	2900	84	86.7	88	0.69	0.81	0.86	5.51
4	5.5	2890	87.5	88.3	88.3	0.77	0.85	0.89	7.73	2910	86.5	88.3	88.5	0.68	0.81	0.86	7.31
5.5	7.5	2930	89	90.3	90.2	0.75	0.83	0.87	10.6	2940	88	89.8	90	0.68	0.78	0.84	10.1
7.5	10	2920	89	90.5	90.6	0.75	0.84	0.88	14.3	2930	88	90.6	90.9	0.7	0.8	0.86	13.3
11	15	2945	90.5	92	92.2	0.74	0.83	0.87	20.8	2955	89.5	91.8	92.2	0.66	0.77	0.83	20
15	20	2940	91.5	92	92.4	0.78	0.85	0.87	28.4	2950	90.5	91.9	92.4	0.7	0.8	0.85	26.6
18.5	25	2940	92.1	92.8	93	0.76	0.84	0.87	34.7	2950	91.7	92.7	93	0.7	0.8	0.83	33.3
22	30	2945	92.8	93.5	93.5	0.79	0.86	0.89	40.2	2955	92.2	93.5	93.7	0.73	0.82	0.85	38.4
30	40	2955	93	93.7	93.8	0.81	0.86	0.88	55.2	2965	92.6	93.7	94.1	0.74	0.82	0.86	51.6
37	50	2955	93.4	94	94.4	0.8	0.86	0.88	67.7	2965	93	94	94.6	0.72	0.82	0.86	63.3
45	60	2965	93.9	94.5	94.5	0.84	0.89	0.91	79.5	2970	93.3	94.5	94.6	0.8	0.87	0.89	74.4
55	75	2960	94.2	94.7	94.7	0.87	0.9	0.92	95.9	2970	93.8	95	95	0.83	0.88	0.9	89.5
75	100	2970	93.4	94.4	95.4	0.85	0.88	0.9	133	2975	93	94.4	95.5	0.81	0.86	0.88	124
90	125	2975	94.3	95.5	95.8	0.84	0.89	0.9	159	2980	93.9	95.5	95.8	0.8	0.87	0.89	147
110	150	2970	94.6	95.4	95.7	0.84	0.88	0.9	194	2975	94.2	95.2	95.8	0.8	0.86	0.88	182
132	175	2970	94.5	95.5	96	0.84	0.89	0.9	232	2975	94.1	95.4	96	0.8	0.87	0.89	215
160	220	2965	95	95.9	96.1	0.86	0.9	0.91	278	2975	94.9	96	96.2	0.83	0.88	0.89	260
200	270	2980	93.7	95	95.3	0.9	0.92	0.92	347	2985	93.3	94.9	95.4	0.88	0.9	0.91	321
250	340	2980	95.5	96.3	96.4	0.89	0.92	0.93	424	2985	95.4	96.3	96.4	0.86	0.91	0.92	392
HIGH OUTPUT DESIGN																	
75	100	2960	93.2	94.3	94.3	0.85	0.89	0.91	133	2965	92.8	94.3	94.6	0.81	0.87	0.9	123
110	150	2970	94.6	95.4	95.7	0.84	0.88	0.9	194	2975	94.2	95.2	95.8	0.8	0.86	0.88	182
IV Pole - 1500 rpm																	
0.12	0.16	1405	59	64	65	0.46	0.59	0.69	0.407	1425	54	60.5	63	0.4	0.51	0.61	0.43
0.18	0.25	1390	60	65	67	0.47	0.57	0.68	0.6	1410	56	63	67	0.41	0.53	0.64	0.58
0.25	0.33	1385	70	73.5	74.5	0.54	0.65	0.73	0.698	1415	68	72.5	75.5	0.46	0.58	0.66	0.69
0.37	0.5	1385	71	74.5	75.5	0.51	0.63	0.72	1.03	1405	67	73.5	75	0.43	0.55	0.66	1.04
0.55	0.75	1420	73	77.5	77.5	0.59	0.72	0.81	1.33	1435	71	76.5	78	0.53	0.65	0.75	1.31
0.75	1	1410	77	78.7	79.6	0.66	0.78	0.85	1.68	1425	75	78.5	80.1	0.58	0.71	0.79	1.65
1.1	1.5	1440	81.5	83.8	83.6	0.64	0.76	0.83	2.41	1450	78.5	83.8	83.8	0.55	0.69	0.77	2.37
1.5	2	1440	81.5	84.7	85	0.59	0.73	0.8	3.35	1455	79.5	84.5	85	0.5	0.64	0.74	3.32
2.2	3	1420	85.5	86.3	86.2	0.7	0.81	0.86	4.51	1430	85	86.4	86.4	0.62	0.75	0.81	4.37
3	4	1425	85	86.5	87.5	0.68	0.8	0.85	6.13	1435	84	86.5	87.5	0.6	0.73	0.81	5.89
4	5.5	1440	87.5	88.4	88.3	0.7	0.8	0.86	8	1450	86.7	88.2	88.6	0.62	0.74	0.81	7.75
5.5	7.5	1460	88.5	89.6	90	0.72	0.81	0.86	10.8	1470	87.5	89.4	90.1	0.65	0.77	0.83	10.2
7.5	10	1460	89.2	89.8	89.8	0.75	0.84	0.88	14.4	1465	88.7	89.8	90.3	0.68	0.79	0.85	13.6
9.2	12.5	1455	90	91	90.7	0.74	0.82	0.85	18.1	1465	89.2	91	91	0.67	0.78	0.83	16.9
11	15	1460	90.6	91.5	91	0.72	0.81	0.85	21.6	1470	90	91.3	91.3	0.64	0.75	0.81	20.7
15	20	1460	90.9	91.9	91.5	0.7	0.8	0.85	29.3	1470	90.1	91.9	91.8	0.62	0.74	0.81	28.1
18.5	25	1465	91.8	93	93.3	0.7	0.8	0.84	35.9	1475	91.3	92.9	93.3	0.6	0.73	0.8	34.5
22	30	1470	92.8	93.4	93.5	0.75	0.83	0.88	40.6	1475	92.2	93.4	93.7	0.68	0.79	0.85	38.4
30	40	1475	93.5	94.1	93.7	0.71	0.81	0.85	57.2	1480	92.5	93.9	93.8	0.63	0.75	0.81	54.9
37	50	1480	93.4	94	94	0.8	0.86	0.88	68	1485	92.6	93.9	94	0.73	0.82	0.86	63.7
45	60	1480	94.2	94.4	94.3	0.79	0.85	0.89	81.5	1485	93.8	94.3	94.5	0.73	0.81	0.87	76.1
55	75	1475	94.2	94.6	94.4	0.8	0.88	0.9	98.4	1480	94	94.7	94.7	0.75	0.85	0.88	91.8
75	100	1475	94	94.7	94.7	0.75	0.84	0.87	138	1485	93.7	95	95.2	0.77	0.84	0.87	126
90	125	1480	94.1	95	95	0.81	0.86	0.88	136	1485	94.1	95	95.3	0.77	0.84	0.87	151
110	150	1485	94.5	95.1	95.2	0.81	0.87	0.89	161	1485	94.3	95.1	95.6	0.78	0.85	0.87	184
132	175	1485	94.5	95.4	95.6	0.8	0.86	0.88	199	1485	94.6	95.3	95.7	0.76	0.84	0.87	221
160	220	1480	95	95.4	95.6	0.8	0.86	0.89	236	1485	94.5	95.7	95.9	0.74	0.82	0.86	270
200	270	1480	94.9	95.7	95.8	0.78	0.86	0.88	288	1490	95	95.8	96	0.78	0.85	0.87	333
250	340	1485	95.3	95.6	95.7	0.83	0.87	0.89	357	1490	95.1	96.1	96.4	0.77	0.85	0.87	415

Ex nA - Non Sparking Motors - Cast Iron Frame
Premium Efficiency EFF1

Output		IEC Frame	Full load torque C_n (Nm)	Locked rotor current I_l/I_n	Locked rotor torque T_l/T_n	Break-down torque T_b/T_n	Inertia J kgm^2	Allowable locked rotor time Hot/Cold (s)	Weight (kg)	Sound dB (A)	Rated speed (rpm)	400 V						Full load current I_n (A)
												% of full load						
												Efficiency η			Power Factor (Cos φ)			
kW	HP											50	75	100	50	75	100	
VI Pole - 1000 rpm																		
0.18	0.25	71	1.95	3.5	2.1	2.2	0.00079	49/108	11	43	900	49	57	61	0.42	0.51	0.6	0.71
0.25	0.33	71	2.58	3.5	2.1	2.2	0.00096	43/95	12	43	900	53	63	67	0.39	0.48	0.55	0.979
0.37	0.5	80	3.8	4.7	2.1	2.2	0.00242	14/31	15	43	925	62	67.5	70	0.48	0.61	0.7	1.09
0.55	0.75	80	5.73	4.8	2.2	2.4	0.00311	11/24	16	43	920	62	68.5	70.3	0.48	0.63	0.72	1.57
0.75	1	90S	7.63	4.8	2.1	2.2	0.0056	20/44	22	45	920	74	77.7	77.7	0.5	0.63	0.72	1.94
1.1	1.5	90L	11.45	5	2.3	2.4	0.00672	12/26	23	45	920	72	77.7	77.7	0.48	0.61	0.71	2.88
1.5	2	100L	14.87	5.5	2.2	2.5	0.01289	19/42	32	44	945	79	81.5	81.5	0.49	0.6	0.7	3.8
2.2	3	112M	22.18	6.2	2.4	2.6	0.02243	16/35	45	48	950	81.5	84	83.8	0.52	0.64	0.72	5.26
3	4	132S	29.27	6	2.1	2.5	0.04264	28/62	59	52	960	82	85	86.5	0.53	0.67	0.74	6.76
4	5.5	132M	40.24	6.5	2.2	2.5	0.05039	21/46	68	52	960	85	86.6	87.2	0.56	0.69	0.76	8.71
5.5	7.5	132M	54.59	6.8	2.3	2.5	0.0659	17/37	79	52	965	84.5	87.5	87.6	0.53	0.65	0.73	12.4
7.5	10	160M	72.41	6.6	2.5	2.9	0.14364	19/42	106	56	970	87.5	89.5	90	0.61	0.74	0.81	14.8
9.2	12.5	160L	90.51	6.2	2.2	2.7	0.16518	15/33	130	56	970	89.4	90.1	90.1	0.6	0.73	0.8	18.4
11	15	160L	108.62	7	2.4	2.7	0.17595	13/29	136	56	970	89	90.3	90.3	0.58	0.72	0.79	22.3
15	20	180L	144.82	8	2.7	3	0.28959	9/20	189.6	56	970	91.2	91.9	91.6	0.72	0.81	0.87	27.2
18.5	25	200L	180.1	6.3	2.3	2.5	0.37671	17/37	210	58	975	91.3	92.7	92.9	0.67	0.78	0.82	35.1
22	30	200L	216.12	6.2	2.3	2.6	0.44846	15/33	240	58	975	91.2	92.6	92.9	0.65	0.75	0.82	41.7
30	40	225S/M	285.24	7	2.6	2.6	0.98842	21/46	366	61	985	91.7	93	93.5	0.73	0.81	0.85	54.5
37	50	250S/M	358.37	7	2.5	2.6	1.3179	20/44	450	61	980	91.8	94	94	0.72	0.81	0.84	67.6
45	60	280S/M	427.86	6.8	2.2	2.7	2.29824	27/59	610	66	985	92	93.6	94.2	0.67	0.77	0.82	84.1
55	75	280S/M	534.82	6.7	2.1	2.6	2.64298	21/46	655	66	985	92.5	93.9	94.3	0.67	0.78	0.82	103
75	100	315S/M	713.09	6.7	2.1	2.4	3.44737	20/44	725	69	985	93.7	94.4	94.5	0.72	0.81	0.84	136
90	125	315S/M	891.37	6.5	2.2	2.4	4.02193	16/35	810	69	985	94	94.8	94.8	0.71	0.8	0.83	165
110	150	315S/M	1069.64	6.5	2.2	2.4	5.28596	18/40	980	69	985	94.5	95.1	95.1	0.69	0.79	0.84	199
132	175	355M/L	1241.61	6.1	1.9	2.2	9.05472	90/198	1400	73	990	94.3	95.5	95.8	0.67	0.77	0.81	246
160	220	355M/L	1560.88	6	1.9	2.1	9.53128	76/167	1460	73	990	94.2	95.8	96	0.65	0.77	0.81	297
200	270	355M/L	1915.63	6.1	2.2	2.3	12.39067	85/187	1700	73	990	94.7	95.5	95.7	0.66	0.76	0.81	372
250	340	355M/L	2412.27	6.1	1.9	2.1	14.77349	64/141	1890	73	990	95	96	96.2	0.69	0.78	0.81	463
HIGH OUTPUT DESIGN																		
75	100	280S/M	713.09	6.7	2.1	2.4	3.44737	20/44	725	69	985	93.7	94.4	94.5	0.72	0.81	0.84	136
VIII Pole - 750 rpm																		
0.18	0.25	80	2.51	3.1	1.8	2	0.00242	16/35	13.7	42	700	42	51	55.8	0.42	0.52	0.61	0.763
0.25	0.33	80	3.34	3.5	2	2	0.00294	15/33	14.8	42	695	51	60	64.3	0.41	0.52	0.61	0.92
0.37	0.5	90S	5.09	4	2	2	0.00448	21/46	18	43	690	53.5	61.3	64.5	0.39	0.5	0.59	1.4
0.55	0.75	90L	7.63	4	2	2.2	0.00616	21/46	21.5	43	690	59	64	66.3	0.39	0.5	0.6	2
0.75	1	100L	9.89	4.2	1.9	2.2	0.01121	38/84	30.2	50	710	71	74.2	76	0.4	0.53	0.61	2.34
1.1	1.5	100L	15.05	4.2	1.8	2.2	0.01289	31/68	30	50	700	71	74.5	77	0.4	0.52	0.62	3.33
1.5	2	112M	19.79	5.4	2.4	2.7	0.0243	32/70	45	46	710	79	81.3	82	0.43	0.55	0.66	4
2.2	3	132S	29.68	6.2	2.4	2.5	0.07527	25/55	70	48	710	82	84.3	84.2	0.54	0.66	0.73	5.17
3	4	132M	39.57	6	2.4	2.4	0.08531	21/46	72.5	48	710	82.8	84.6	84.5	0.54	0.67	0.75	6.83
4	5.5	160M	53.29	5.2	2.2	2.8	0.12209	27/59	110	51	725	83	85.8	86.6	0.44	0.57	0.66	10.1
5.5	7.5	160M	72.16	5.6	2.5	2.8	0.16518	22/48	130	51	730	83.5	86.4	87	0.42	0.55	0.65	14
7.5	10	160L	96.88	5.2	2	2.4	0.16518	19/42	145	51	725	85.5	88	88.5	0.52	0.64	0.71	17.2
9.2	12.5	180M	121.1	7	2.2	2.7	0.262	12/26	163	51	725	87.5	88.3	88.5	0.67	0.77	0.83	18.1
11	15	180L	145.32	7	2.2	2.4	0.26201	9/20	183	51	725	88	89	89	0.68	0.78	0.83	21.5
15	20	200L	192.44	5	2	2.2	0.50227	28/62	300	53	730	89.5	90.8	91.5	0.53	0.65	0.71	33.3
18.5	25	225S/M	240.55	7.2	2.1	2.6	0.84722	18/40	340	56	730	90.5	91.5	91.9	0.69	0.79	0.83	35
22	30	225S/M	288.66	7.5	2.2	3	0.98842	18/40	365	56	730	90.8	92.2	92.5	0.67	0.77	0.82	41.9
30	40	250S/M	384.87	7.5	2.1	2.8	1.22377	17/37	440	56	730	91.7	92.5	93	0.69	0.79	0.83	56.1
37	50	280S/M	474.59	6.5	1.9	2.2	2.64298	32/70	590	59	740	92.6	93.5	93.9	0.63	0.74	0.8	71.1
45	60	280S/M	569.51	6.5	2	2.4	3.10263	32/70	650	59	740	92.9	93.7	94	0.62	0.73	0.79	87.5
55	75	315S/M	711.89	6.5	2	2.2	3.44737	32/70	730	62	740	93.5	94.5	94.5	0.63	0.74	0.8	105
75	100	315S/M	949.18	6.6	1.9	2.2	4.36666	20/44	876	62	740	93.9	94.7	94.9	0.66	0.78	0.81	141
90	125	315S/M	1186.48	6.8	1.9	2.4	5.28596	23/51	970	62	740	93.9	94.7	95	0.67	0.77	0.81	169
110	150	355M/L	1423.78	6.4	1.5	2.2	12.56043	41/90	1430	70	740	93.5	95.2	95.2	0.62	0.73	0.79	211
132	175	355M/L	1661.07	6.5	1.6	2.2	13.18845	47/103	1445	70	740	94	95.4	95.4	0.63	0.73	0.79	253
160	220	355M/L	2088.2	6.6	1.6	2.2	16.32856	42/92	1620	70	740	94.3	95.7	95.7	0.62	0.74	0.79	305
200	270	355M/L	2562.8	6.8	1.6	2.1	19.46866	37/81	1830	70	740	94.2	95.1	95.5	0.58	0.71	0.78	388

Notes:
**Class "F" insulation with ΔT105K*
Standard voltage, connection and frequency: 220-240V Δ 50Hz 380-415V Δ 50Hz
380-415V Y 50Hz 660-690V Y 50Hz
The values shown are subject to change without prior notice. To obtain guaranteed values please access our website.

Ex nA - Non Sparking Motors - Cast Iron Frame
Premium Efficiency EFF1

Output		380 V								415 V							
		Rated speed (rpm)	% of full load						Full load current I_n (A)	Rated speed (rpm)	% of full load						Full load current I_n (A)
			Efficiency η			Power Factor (Cos φ)					Efficiency η			Power Factor (Cos φ)			
kW	HP		50	75	100	50	75	100			50	75	100	50	75	100	
VI Pole - 1000 rpm																	
0.18	0.25	890	51	58	61	0.46	0.55	0.63	0.712	910	47	56	61	0.39	0.47	0.57	0.72
0.25	0.33	890	55	64	67	0.4	0.53	0.59	0.961	910	51	62	67	0.37	0.44	0.53	0.979
0.37	0.5	920	64	68.5	70.5	0.52	0.65	0.74	1.08	930	60	66.5	69.5	0.44	0.57	0.66	1.12
0.55	0.75	910	64	69.5	70.5	0.53	0.67	0.76	1.56	930	60	67.5	70	0.44	0.59	0.66	1.66
0.75	1	910	75	77.5	76.8	0.55	0.67	0.74	2.01	930	73	77.7	77.7	0.46	0.6	0.7	1.92
1.1	1.5	910	73	77.5	76.8	0.53	0.65	0.74	2.94	930	71	77.7	77.7	0.44	0.57	0.67	2.94
1.5	2	940	80	81.5	81.5	0.53	0.64	0.72	3.88	950	78	81.5	81.5	0.45	0.57	0.68	3.77
2.2	3	945	82.5	83.5	83.4	0.55	0.67	0.74	5.42	955	80.5	84	84	0.48	0.61	0.7	5.21
3	4	955	83	85.2	86	0.57	0.69	0.76	6.97	965	81	84.8	86.5	0.5	0.64	0.72	6.7
4	5.5	955	85.7	86.8	87	0.6	0.72	0.78	8.96	965	84.3	86.4	87.2	0.52	0.66	0.74	8.62
5.5	7.5	960	85.5	87.6	87.6	0.58	0.7	0.76	12.6	965	83.5	87.4	87.6	0.48	0.61	0.7	12.5
7.5	10	965	88	89.7	89.9	0.65	0.77	0.82	15.5	975	87	89.3	90	0.58	0.71	0.79	14.7
9.2	12.5	970	90	90.3	90	0.64	0.75	0.81	19.2	975	88.7	89.9	90	0.55	0.71	0.79	18
11	15	970	89.5	90.5	90.2	0.62	0.76	0.81	22.9	975	88.5	90	90.3	0.54	0.68	0.76	22.3
15	20	970	91.4	91.8	91.4	0.75	0.83	0.89	28	975	91	91.8	91.6	0.7	0.8	0.85	26.8
18.5	25	970	91.8	92.6	92.7	0.72	0.81	0.84	36.1	980	90.8	92.6	92.9	0.64	0.75	0.8	34.6
22	30	970	92	92.9	92.9	0.7	0.78	0.84	42.8	980	90.4	92.2	92.9	0.6	0.72	0.8	41.2
30	40	980	92	93	93.4	0.76	0.84	0.86	56.7	985	91.4	93	93.5	0.7	0.79	0.84	53.1
37	50	980	92	94	93.9	0.75	0.83	0.86	69.6	985	91.6	94	94	0.69	0.79	0.82	66.8
45	60	980	92	93.5	93.5	0.76	0.84	0.87	84	985	91.5	93.5	94.1	0.64	0.75	0.8	83.2
55	75	985	92.5	93.7	94.1	0.71	0.79	0.84	86.5	985	92.2	93.9	94.2	0.64	0.75	0.81	100
75	100	985	94	94.4	94.4	0.75	0.83	0.85	142	985	93.4	94.4	94.5	0.69	0.79	0.83	133
90	125	985	94	94.4	94.4	0.75	0.83	0.85	142	985	93.7	94.8	94.8	0.68	0.78	0.82	161
110	150	985	94.3	94.8	94.7	0.74	0.82	0.84	172	985	94.3	95.1	95.2	0.66	0.77	0.83	194
132	175	985	94.7	95	95	0.73	0.81	0.85	207	990	94.1	95.5	95.8	0.64	0.75	0.8	240
160	220	990	94.5	95.5	95.7	0.72	0.79	0.82	256	990	93.9	95.8	96	0.6	0.74	0.8	290
200	270	990	94.4	95.5	95.7	0.7	0.79	0.82	358	990	94.4	95.4	95.7	0.62	0.73	0.79	368
250	340	990	95	95.6	95.7	0.7	0.79	0.82	387	990	94.7	95.9	96.2	0.66	0.76	0.8	452
HIGH OUTPUT DESIGN																	
75	100	985	92.8	93.9	94.2	0.71	0.8	0.83	107	985	93.4	94.4	94.5	0.69	0.79	0.83	133
VIII Pole - 750 rpm																	
0.18	0.25	685	38	46.2	49	0.38	0.47	0.55	0.677	705	40	49	55.5	0.4	0.49	0.58	0.778
0.25	0.33	690	44	53	56	0.44	0.55	0.64	0.763	700	49	59	63.8	0.4	0.5	0.59	0.924
0.37	0.5	685	53	61	63.8	0.43	0.55	0.63	0.945	695	52	60	64	0.37	0.47	0.56	1.44
0.55	0.75	680	55	62.5	65	0.42	0.54	0.64	1.35	700	57	63	66	0.37	0.47	0.57	2.03
0.75	1	680	61	65	66.5	0.42	0.54	0.64	1.96	715	70	74	76	0.38	0.5	0.58	2.37
1.1	1.5	700	72	74.4	75.5	0.44	0.56	0.64	2.36	710	69.5	73.5	76.9	0.37	0.49	0.59	3.37
1.5	2	690	72.5	75.5	76.9	0.44	0.57	0.65	3.34	715	78.2	81	81.8	0.4	0.51	0.63	4.05
2.2	3	700	79.8	81.6	82	0.47	0.59	0.69	4.03	715	81	84.3	84.3	0.5	0.63	0.71	5.11
3	4	705	83	84.3	84.2	0.58	0.7	0.75	5.29	715	82.5	84.6	84.6	0.51	0.64	0.73	6.76
4	5.5	705	83.2	84.6	84.5	0.58	0.71	0.77	7.01	730	82	85.4	86.6	0.41	0.53	0.63	10.2
5.5	7.5	725	84	86.2	86.6	0.48	0.61	0.7	10	730	83	86.1	87	0.4	0.52	0.62	14.2
7.5	10	725	84	86.7	87	0.46	0.6	0.69	13.9	725	84.5	87.8	88.5	0.48	0.6	0.69	17.1
9.2	12.5	720	86.5	88.2	88.5	0.56	0.68	0.74	17.4	730	87.2	88.3	88.6	0.63	0.75	0.81	17.8
11	15	725	87.8	88.3	88	0.71	0.81	0.85	18.7	730	87.8	89	89	0.65	0.75	0.81	21.2
15	20	725	88.2	89	88.8	0.73	0.81	0.85	22.1	735	89	90.6	91.3	0.5	0.63	0.69	33.1
18.5	25	730	90	91	91.2	0.56	0.67	0.73	34.2	730	90.2	91.5	91.9	0.65	0.77	0.82	34.2
22	30	725	90.8	91.5	91.5	0.73	0.81	0.84	36.6	735	90.5	92.1	92.5	0.63	0.74	0.81	40.8
30	40	730	91.1	92.2	92.2	0.71	0.8	0.83	43.7	730	91.3	92.5	93	0.65	0.77	0.82	54.7
37	50	725	92	92.5	92.6	0.73	0.81	0.84	58.6	740	92.1	93.4	93.8	0.6	0.72	0.79	69.5
45	60	735	92.9	93.5	93.8	0.68	0.76	0.81	74	740	92.5	93.5	94.1	0.58	0.7	0.77	86.4
55	75	735	93.3	93.9	94	0.66	0.77	0.81	89.8	740	93.1	94.5	94.6	0.61	0.73	0.79	102
75	100	740	93.5	94.5	94.5	0.65	0.75	0.8	111	740	93.7	94.7	94.9	0.63	0.76	0.8	137
90	125	735	93.8	94.5	94.4	0.69	0.78	0.81	109	740	93.6	94.6	95.1	0.63	0.75	0.8	165
110	150	735	94.1	94.7	94.8	0.69	0.8	0.82	147	745	93	95.2	95.2	0.59	0.77	0.77	209
132	175	735	94.2	94.8	95	0.71	0.79	0.83	173	745	93.5	95.4	95.4	0.6	0.71	0.77	250
160	220	740	94	95.2	95.1	0.65	0.76	0.81	217	745	93.8	95.7	95.7	0.58	0.71	0.78	298
200	270	740	94	95.4	95.4	0.63	0.73	0.79	266	745	94	95	95.5	0.54	0.68	0.76	383

Ex nA - Non Sparking Motors
Cast Iron Frame
Top Premium Efficiency Exceeds EFF1

Standard Features:

- Three-phase, multivoltage, IP55, TEFC
- Output: 4 up to 315kW
- Frames: 112 up to 355M/L
- Voltage: 220-240/380-415V (up to 100L)
  380-415/660V (from 112M and up)
- Class “F” insulation (ΔT=80K)
- Continuous duty: S1
- Design N
- Ambient temperature: 40°C, at 1000 m.a.s.l.
- Squirrel cage rotor/Aluminium die cast
- V’Ring seal
- Temperature classification:
  - Zone 2: class of temperature T3
  - Zone 22: maximum motor guaranteed external surface temperature T125°C.
  Temperature limitation due to the presence of dust clouds (for materials with ignition temperature above 125° C) and presence of dust layers (up to 5mm).
  Note: On VFD Application, motor temperature class is ΔT = 160° C, marking: CE Ex II 3D T160°C
- Fan: Conductive plastic (63-315 frames)
  Aluminium (355 frames)
- Grease fitting from frame 160
- Plastic thread plug
- Increased safety terminal box
- Ground lug inside the terminal box
- Color: RAL 6021

Options Available:

Options Available:

- Degree of Protection: IP56, IP65 or IP66(W)
- Sealed Bearings on frames 160 up to 200
- Cable glands
- Other paint options

More options available, on request

Typical Applications:

Typical Applications:
These motors are used in environment where an explosive atmosphere will probably not be present under normal operating conditions and, if any, this will be for short periods of time:

- Pumps
- Fans
- Conveyor belts
- Machine tools
- Mills
- Centrifugal machines
- Presses
- Elevators
- Looms
- Grinders
- Woodworking
- Cooling
- Packaging equipment
- Other severe duty applications where the environments are classified as Zone 2, groups IIA, IIB and IIC.

Terminal Box
Made of cast iron made with plenty of internal space. The terminal box can be rotated in 90° intervals, having one or two threaded holes to connect the power supply cables. Power supply connection components are certified, then reducing short-circuit inside the terminal box. Designed in such a way that the energized components remain at a minimum safe distance from grounded components parts. In order to allow end users safety, the Ex "n" motors are designed with grounding lug inside and outside of the terminal box, with the inside grounding lugs duly connected from the factory. * Available as top or side mounted.

Bearings
WEG motors are fitted with the highest quality bearings selected from the best manufacturers in the world and designed to ensure long life of the motor even under heavy operating conditions.

Fan Cover
Made of steel plate for frames 112 up to 132M and of cast iron for frames 160M and above. It offers a superior mechanical rigidity, corrosion-resistance and extended lifetime.

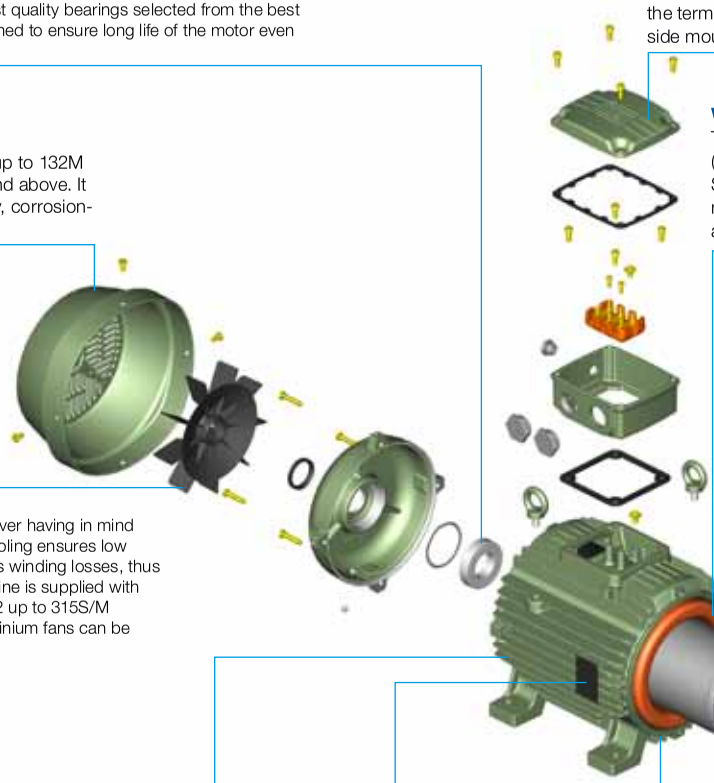

Winding
The wire is enameled with class H Varnish and are impregnated with dipping and baking process (frames 112 up to 200L) and continuous resin flow process (frames 225S/M up to 315M/L). Supplied with patented WISE (WEG Insulation System Evolution), which allows three times longer motor lifetime designed to operate in environments with excess of moisture and suitable for VFD application. The winding is designed to obtain the minimal Joule losses and temperature rise.

Rotor
High pressure die cast rotor dynamically balanced, thus reducing vibrations. Built with premium electrical grade steel lamination to improve efficiency. Designed to meet performance and surface temperature standard requirements (as long as it is kept below the ignition temperature of the possible present gas).

Shaft
WEG uses SAE/AISI 1040/45 steel as standard, which provides high mechanical strength, preventing bending under load and minimizes fatigue which extends lifetime. Specially designed to withstand torques caused during motor acceleration and deceleration. It´s size is larger than the standard motor and, upon special design, motor can have second shaft end.

Fan
WEG has designed the fan and fan cover having in mind the lowest noise level. The efficient cooling ensures low motor temperature rise. This minimizes winding losses, thus increasing motor efficiency. The W21 line is supplied with anti-static polypropylene fans from 112 up to 315S/M frames. Alternatively, cast iron or aluminium fans can be supplied on request for all frames.

Endshields
Made of cast iron, they are provided with external fins for better temperature dissipation, thus increasing bearing life.

Frame
WEG motors are made of FC-200 high-grade cast iron. The frames are provided with fins aiming at improving the heat dissipation and adequately spaced to minimize air blockage due to build up of dirt. Motor designed to ensure that surface temperature is lower than ignition temperature of the gas that is present in the environment. Mechanical components are designed towithstand an explosion inside the motor without causing any risk to outside areas since there is no flame flame propagation through flame path. The motors can be mounted in any position, horizontal and vertical, withstanding the maximum axial and radial thrusts.

Nameplate
Stainless steel nameplate ensuring a permanent record of all motor data.

Stator
The stator is built with highest quality of steel lamination and it is thermally and chemically treated to reduce electrical losses and operating temperature. Guarantees high efficiency and extended motor lifetime.

Seals
WEG Explosion Proof Motors are fitted with either Lip seal or Labyrinth Tachonite as standard (see standard features list) to provide the best possible protection.

Drain Hole
Provided with plastic drain plug allowing drainage of condensed water.

Ex nA - Non Sparking Motors - Cast Iron Frame
Top Premium Efficiency Exceeds EFF1

Output		IEC Frame	Full load torque C_n (Nm)	Locked rotor current I_l/I_n	Locked rotor torque T_l/T_n	Break-down torque T_b/T_n	Inertia J kgm^2	Allowable locked rotor time Hot/Cold (s)	Weight (kg)	Sound dB (A)	Rated speed (rpm)	400 V						Full load current I_n (A)
												% of full load						
												Efficiency η			Power Factor (Cos φ)			
kW	HP											50	75	100	50	75	100	
II Pole - 3000 rpm																		
4	5.5	112M	13.3	8.5	2.6	3.1	0.00842	21/46	46	64	2900	88.7	89.8	89.8	0.61	0.79	0.85	7.56
5.5	7.5	132S	17.9	8.5	2.5	3.0	0.02056	19/42	62	68	2940	90.1	91.2	91.3	0.70	0.80	0.85	10.2
7.5	10	132S	23.9	8.5	2.7	3.1	0.02804	8/18	75	68	2940	89.0	91.3	91.6	0.72	0.83	0.87	13.6
11	15	160M	35.7	8.6	2.3	3.0	0.05295	12/26	110	70	2950	91.7	93.0	93.0	0.65	0.78	0.83	20.6
15	20	160M	47.7	8.3	2.4	2.9	0.05883	11/24	115	70	2945	92.2	93.3	93.3	0.71	0.81	0.84	27.6
18.5	25	160L	59.6	9.0	2.3	2.7	0.06766	11/24	136	70	2945	92.9	93.8	93.8	0.67	0.79	0.85	33.5
22	30	180M	71.3	8.6	2.8	2.7	0.15082	9/20	180	70	2955	93.2	94.3	94.1	0.75	0.83	0.87	38.8
30	40	200L	95.1	7.6	2.7	2.4	0.20630	35/77	245	74	2955	92.6	93.9	94.2	0.75	0.83	0.86	53.5
37	50	200L	119	8.4	2.6	2.6	0.22424	16/35	260	74	2960	93.3	94.2	94.7	0.76	0.84	0.87	64.8
45	60	225S/M	142	8.5	2.4	2.9	0.52021	20/44	410	78	2965	94.5	95.4	95.4	0.82	0.88	0.90	75.6
55	75	250S/M	178	8.5	2.3	3.0	0.55609	18/40	470	78	2960	94.7	95.5	95.3	0.85	0.89	0.91	91.5
75	100	280S/M	236	7.0	1.6	2.6	1.27083	36/79	700	79	2975	95.2	96.1	96.0	0.83	0.88	0.89	127
90	125	280S/M	295	8.0	2.2	2.8	1.41204	42/92	780	79	2975	94.3	95.6	96.0	0.82	0.88	0.90	150
110	150	315S/M	354	8.0	1.8	2.6	1.50617	25/55	830	81	2975	95.2	96.4	96.4	0.76	0.84	0.88	187
132	175	315S/M	413	7.8	1.9	2.6	1.74151	30/66	900	81	2975	95.5	96.6	96.6	0.79	0.87	0.89	222
160	220	315S/M	519	8.2	1.9	2.6	2.11806	30/66	990	81	2975	95.5	96.6	96.6	0.79	0.86	0.89	269
IV Pole - 1500 rpm																		
4	5.5	112M	26.8	6.6	1.8	2.3	0.01875	8/18	49	55	1445	87.4	89.0	89.3	0.66	0.77	0.83	7.79
5.5	7.5	132S	36.1	8.5	2.1	2.8	0.05427	12/26	65	58	1465	88.5	90.1	90.7	0.69	0.79	0.85	10.3
7.5	10	132M	48.1	8.0	2.2	2.7	0.06590	7/15	85	58	1465	89.0	91.1	91.7	0.71	0.81	0.85	13.9
11	15	160M	71.9	7.5	2.6	2.8	0.11040	12/26	135	62	1470	91.1	92.3	92.6	0.62	0.73	0.80	21.4
15	20	160L	96.2	6.3	1.8	2.1	0.13048	11/24	130	62	1465	91.1	92.4	92.9	0.65	0.76	0.82	28.4
18.5	25	180M	120	8.3	2.5	2.5	0.17939	12/26	175	64	1470	92.1	93.2	93.6	0.70	0.81	0.85	33.6
22	30	180L	143	8.6	2.5	2.6	0.24666	11/24	225	64	1475	92.9	94.0	94.3	0.68	0.78	0.84	40.1
30	40	200L	190	7.3	2.5	2.6	0.38611	19/42	280	67	1480	94.0	94.7	94.5	0.65	0.76	0.82	55.9
37	50	225S/M	238	7.2	2.0	2.4	0.69987	14/31	380	70	1475	93.6	94.7	94.9	0.77	0.85	0.88	63.9
45	60	225S/M	286	7.5	2.1	2.5	0.83984	17/37	400	70	1480	93.9	94.7	94.7	0.78	0.86	0.89	77.1
55	75	250S/M	357	8.0	2.2	2.5	1.15478	9/20	470	70	1475	93.9	94.9	95.2	0.80	0.87	0.89	93.7
75	100	280S/M	475	7.4	2.0	2.2	2.16799	21/46	660	74	1485	94.5	95.5	95.8	0.77	0.85	0.87	130
90	125	280S/M	591	8.1	2.2	2.3	2.81036	22/48	800	74	1485	95.0	95.7	96.0	0.78	0.85	0.88	154
110	150	315S/M	712	8.0	2.2	2.3	3.21184	29/64	860	77	1485	95.0	95.8	96.3	0.75	0.84	0.87	190
132	175	315S/M	831	8.3	2.3	2.3	3.77391	34/75	1000	77	1485	95.6	96.3	96.4	0.76	0.85	0.87	227
160	220	315S/M	1044	8.2	2.2	2.5	3.77391	18/40	1000	77	1485	95.7	96.3	96.5	0.75	0.84	0.87	275
250	340	355M/L	1603	8.3	2.1	2.3	8.38871	8/18	1380	79	1490	95.8	96.6	96.8	0.78	0.85	0.88	424
300	400	355M/L	1886	8.3	2.0	2.0	10.2529	17/37	1750	79	1490	95.7	96.6	96.9	0.78	0.85	0.89	502
315	430	355M/L	2027	6.7	1.9	2.5	11.1850	33/73	1770	79	1490	96.0	96.4	96.7	0.80	0.86	0.89	528

Notes:
**Class "F" insulation with ΔT105K*
Standard voltage, connection and frequency: 220-240V Δ 50Hz *380-415V Δ 50Hz*
380-415V Y 50Hz *660-690V Y 50Hz*
The values shown are subject to change without prior notice. To obtain guaranteed values please access our website.

Ex nA - Non Sparking Motors - Cast Iron Frame
Top Premium Efficiency Exceeds EFF1

Output		380 V								415 V							
		Rated speed (rpm)	% of full load						Full load current I_n (A)	Rated speed (rpm)	% of full load						Full load current I_n (A)
			Efficiency η			Power Factor (Cos φ)					Efficiency η			Power Factor (Cos φ)			
kW	HP		50	75	100	50	75	100			50	75	100	50	75	100	
II Pole - 3000 rpm																	
4	5.5	2885	88.2	89.4	89.6	0.65	0.83	0.88	7.71	2910	88.2	89.6	89.7	0.58	0.75	0.83	7.47
5.5	7.5	2930	90.3	91.3	91.2	0.72	0.82	0.87	10.5	2950	89.8	91.2	91.3	0.66	0.77	0.83	10.1
7.5	10	2930	89.0	91.3	91.5	0.76	0.84	0.88	14.2	2945	89.0	91.3	91.6	0.70	0.80	0.85	13.4
11	15	2945	91.6	92.8	92.8	0.72	0.82	0.85	21.2	2955	91.6	93.0	93.1	0.61	0.74	0.81	20.3
15	20	2940	92.2	93.1	93.1	0.74	0.82	0.85	28.8	2950	92.1	93.2	93.3	0.68	0.80	0.83	26.9
18.5	25	2940	92.9	93.7	93.7	0.70	0.81	0.86	34.9	2950	92.8	93.8	93.8	0.63	0.77	0.84	32.7
22	30	2950	93.3	94.3	94.1	0.78	0.85	0.88	40.4	2955	93.0	94.2	94.0	0.72	0.81	0.86	37.9
30	40	2950	92.5	93.9	94.2	0.76	0.84	0.87	55.6	2960	92.6	93.9	94.2	0.74	0.82	0.85	52.1
37	50	2955	93.5	94.3	94.3	0.81	0.86	0.88	67.7	2960	93.0	94.0	94.4	0.73	0.82	0.86	63.4
45	60	2960	94.6	95.4	95.3	0.84	0.89	0.91	78.8	2970	94.4	95.4	95.4	0.80	0.87	0.89	73.7
55	75	2955	94.3	95.2	95.1	0.86	0.90	0.92	95.5	2960	94.6	95.5	95.4	0.83	0.88	0.90	89.1
75	100	2970	95.0	95.9	95.9	0.84	0.89	0.90	132	2975	95.2	96.2	96.1	0.80	0.86	0.88	123
90	125	2975	94.3	95.6	96.0	0.84	0.89	0.90	158	2980	94.3	95.6	96.0	0.80	0.87	0.89	147
110	150	2970	95.2	96.4	96.4	0.78	0.85	0.89	195	2975	95.0	96.3	96.3	0.72	0.82	0.87	183
132	175	2970	95.5	96.6	96.6	0.81	0.88	0.89	233	2975	95.3	96.5	96.5	0.75	0.86	0.88	216
160	220	2970	95.5	96.4	96.5	0.81	0.87	0.90	280	2975	95.3	96.5	96.6	0.77	0.85	0.88	262
IV Pole - 1500 rpm																	
4	5.5	1440	87.5	88.7	88.9	0.70	0.80	0.85	8.04	1450	87.3	89.0	89.2	0.62	0.74	0.81	7.70
5.5	7.5	1460	89.0	90.0	90.5	0.72	0.81	0.86	10.7	1470	88.0	89.9	90.6	0.65	0.77	0.83	10.2
7.5	10	1460	89.5	91.0	91.5	0.73	0.82	0.86	14.5	1470	88.0	91.0	91.7	0.68	0.80	0.84	13.5
11	15	1465	91.0	92.2	92.5	0.64	0.75	0.82	22.0	1475	91.0	92.2	92.6	0.60	0.70	0.78	21.2
15	20	1460	91.2	92.3	92.8	0.70	0.79	0.84	29.2	1470	91.0	92.3	92.8	0.60	0.73	0.80	28.1
18.5	25	1465	92.0	93.2	93.5	0.73	0.84	0.87	34.6	1475	92.0	93.2	93.6	0.65	0.78	0.84	32.7
22	30	1470	93.0	94.0	94.3	0.70	0.80	0.85	41.7	1475	92.5	93.9	94.3	0.66	0.76	0.83	39.1
30	40	1475	94.1	94.6	94.4	0.69	0.79	0.84	57.5	1480	93.8	94.5	94.5	0.60	0.73	0.80	55.2
37	50	1475	93.5	94.7	94.9	0.78	0.86	0.89	66.6	1480	93.3	94.6	94.8	0.76	0.84	0.87	62.4
45	60	1475	94.0	94.8	94.5	0.79	0.87	0.90	80.4	1480	93.8	94.7	94.8	0.76	0.85	0.88	75.0
55	75	1475	94.0	94.8	95.2	0.81	0.88	0.90	97.5	1480	93.8	94.8	95.1	0.79	0.86	0.88	91.4
75	100	1480	94.6	95.5	95.8	0.79	0.86	0.88	135	1485	94.3	95.5	95.7	0.75	0.84	0.86	127
90	125	1485	95.0	95.6	95.9	0.80	0.86	0.89	160	1485	95.0	95.7	96.0	0.75	0.84	0.87	150
110	150	1480	95.0	95.8	96.2	0.76	0.85	0.88	197	1485	94.8	95.7	96.2	0.73	0.83	0.86	185
132	175	1480	95.5	96.3	96.3	0.78	0.86	0.88	237	1485	95.5	96.2	96.4	0.73	0.84	0.86	222
160	220	1480	95.8	96.3	96.5	0.77	0.85	0.88	286	1485	95.5	96.2	96.5	0.70	0.83	0.85	271
250	340	1490	96.0	96.6	96.8	0.80	0.86	0.89	441	1490	95.5	96.5	96.8	0.75	0.84	0.87	413
300	400	1490	95.8	96.6	96.9	0.80	0.86	0.90	523	1490	95.5	96.6	96.8	0.75	0.84	0.88	490
315	430	1490	96.2	96.5	96.6	0.83	0.87	0.89	557	1490	95.6	96.3	96.7	0.77	0.84	0.88	515

Ex nA - Non Sparking Motors - Cast Iron Frame

Mechanical Data

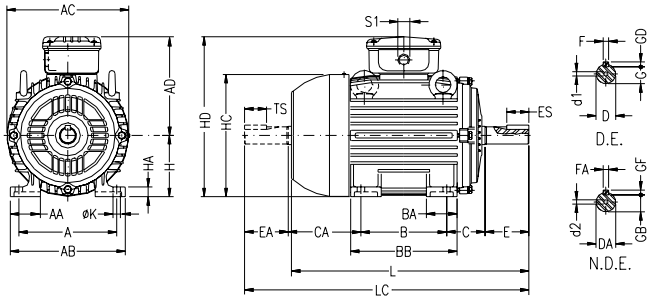

IEC FRAME	A	AA	AB	AC	AD	B	BA	BB	C	CA	SHAFT DIMENSIONS											H	HA	HC	HD	K	L	LC	S1	d1	d2	BEARINGS	
											D	E	ES	F	G	GD	DA	EA	TS	FA	GB	GF										D.E.	N.D.E.
63	100	21	116	125	119	80	22	95	40	78	11j6	23	14	4	8.5	4	9j6	20	12	3	7.2	3	63	8	124	182	7	216	241		EM4	EM3	6201-ZZ	
71	112	30	132	141	127	90	38	113.5	45	88	14j6	30	18	5	11	5	11j6	23	14	4	8.5	4	71	12	139	198		248	276	2xM20x1.5	DM5	EM4	6203-ZZ	6202-ZZ
80	125	35	149	159	136	100	40	125.5	50	93	19j6	40	28	6	15.5	6	14j6	30	18	5	11	5	80	13	157	216	10	276	313		DM6	DM4	6204-ZZ	6203-ZZ
90S	140	38	164	179	155	100	42	131	56	104	24j6	50	36	8	20	7	16j6	40	28	5	13	5	90	15	177	245		304	350	2xM25x1.5	DM8	DM6	6205-ZZ	6204-ZZ
90L						125		156																				329	375					
100L	160	49	188	199	165	140	50	173	63	118	28j6	60	45		24		22j6	50	36	6	18.5	6	100	16	198	265	12	376	431		DM10	DM8	6206-ZZ	6205-ZZ
112M	190	48	220	222	184			177	70	128							24j6			8	20	7	112	18.5	235	296		393	448	2xM32x1.5			6307-ZZ	6206-ZZ
132S	216	51	248	270	212	178	55	197	89	150	38k6	80	63	10	33	8	28j6	60	45		24		132	20	274	344		452	519		DM12	DM10	6308-ZZ	6207-ZZ
132M								225																				490	557					
160M	254	64	308	312	255	210	65	254	108	174	42k6	110	80	12	37	8	42k6	110	80	12	37	8	160	22	317	415	14.5	598	712	2xM40x1.5	DM16		6309-C3	6209-Z-C3
160L						254		298																				643	756					
180M	279	80	350	358	275	241	75	294	121	200	48k6			14	42.5	9	48k6			14	42.5	9	180	28	360	455		664	782				6311-C3	6211-Z-C3
180L						279		332																				702	820					
200M	318	82	385	396	300	267	85	370	133	222	55m6			16	49	10							200	30	402	500	18.5	729	842	2xM50x1.5	M20		6312-C3	6212-Z-C3
200L						305																						767	880					
225S/M	356	80	436	476	373	286	105	391	149	280	55m6*	140	100				55m6*	110	100	16	49	10	225	34	466	598		817	935				6314-C3	
250S/M	406	100	506			311	138	449	168	312	60m6			18	53	11	60m6	140	125	18	53	11	250	42	491	623	24	847	995					
						349				274	65m6						60m6*										923	1071					
280S/M	457		557	600	468	368	142	510	190	350	65m6*				58		60m6*						280		578	748		1036	1188				6316-C3	
						419				299	75m6			20	67.5	12	65m6				58													
315S/M	508	120	628		497	406	152	558	216	376	65m6*			18	58	11	60m6*				53		315	52	613	812	28	1126	1274	2xM63x1.5			6314-C3	
						457				325	80m6	170	160	22	71	14	65m6				58							1156	1308				6319-C3	6316-C3
315B		182	630	698	595	630	162	830			75m6*	140	125	20	67.5	12	-							47.5	694	865		1432	-		M20	-	6316-C3	6314-C3
											100m6	210	200	28	90	16												1502			M24		6322-C3	6319-C3
355M/L	610	140	750	815	685	560	200	760	254	458	75m6*	140	125	20	67.5	12	60m6*	140	125	18	53	11	355	50	725	1040		1396	1561		M20		6316-C3	6314-C3
						630				388	100m6	210	200	28	90	16	80m6	170	160	22	71	14						1466	1661		M24	M20	6322-C3	6319-C3

- *All the dimensions are given in millimeters*
- *Certified threaded plugs for EEx e motor line*
- *The values shown are subject to change without prior notice*

** Shaft dimensions for II pole motors, only for direct coupling*
*** For frame 100L, 3 kW, 4 poles, Premium Efficiency motors, the L dimension is 420mm and LC dimension is 475mm.*

** This data apply to EEx d - Non sparking Multivoltage Motors – Improved Efficiency - EFF2, Premium Efficiency – EFF1, Top Premium Efficiency – Exceeds EFF1*

Ex nA - Non Sparking Motors - Cast Iron Frame

Mechanical Data

"FF" Flange

IEC FRAME	"FF" FLANGE									N° OF HOLES
	FLANGE	C	LA	M	N	P	T	S	α	
63	FF-115	40	9	115	95	140	3	10	45°	4
71	FF-130	45		130	110	160	3.5			
80	FF-165	50	10	165	130	200		12		
90S/L		56								
100L	FF-215	63	11	215	180	250	4	15		
112M		70								
132S/M	FF-265	89	12	265	230	300				
160M/L	FF-300	108	18	300	250	350	5	19		
180M/L		121								
200M/L	FF-350	133		350	300	400				
225S/M	FF-400	149		400	350	450			22°30'	8
250S/M	FF-500	168		500	450	550				
280S/M		190								
315S/M	FF-600	216	22	600	550	660	6	24		
315B										
355M/L	FF-740	254		740	680	800				

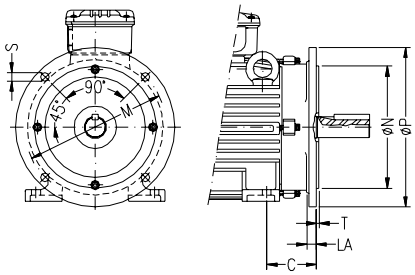

"C" Din Flange

IEC FRAME	"C" DIN FLANGE							N° OF HOLES
	FLANGE	C	M	N	P	S	T	
63	C-90	40	75	60	90	M5	2.5	4
71	C-105	45	85	70	105	M6		
80	C-120	50	100	80	120		3	
90S/L	C-140	56	115	95	140	M8		
100L	C-160	63	130	110	160		3.5	
112M		70						
132S/M	C-200	89	165	130	200	M10		

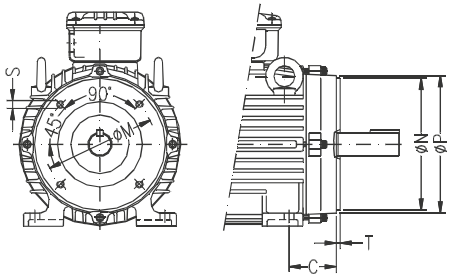

Cast Iron Frame Motors For Zone 21 Improved Efficiency EFF2

Standard Features:

- Three-phase, multivoltage, IP66, TEFC
- Output: 0.12 up to 250kW
- Frames: 63 up to 355M/L
- Voltage: 220-240/380-415V (up to 100L)
  380-415/660V (from 112M and up)
- Class “F” insulation (ΔT=80K)
- Continuous duty: S1
- Design N
- Ambient temperature: 40°C, at 1000 m.a.s.l.
- Squirrel cage rotor/Aluminium die cast
- Oil Seal (frames 63 up to 80)
- W3Seal (frames 90S up to 355M/L)
- Anti-condensation drain holes
- Temperature Classification: Zone 21-maximum guaranteed external surface temperature T125ºC temperature limitation because of the presence of dust clouds (for material with ignition temperature above 125ºC) and presence of dust layers (up to 5mm)
- Regreasing nipples from frame 225S/M and above
- Metric thread cable entries in terminal box
- Thermistors (1 per phase) 140°C
- Suitable for Inverter Duty applications
- Color: RAL 5010

Options Available:

- Degree of Protection: IP65
- Bearing seals:
  - Oil seal (frames 90S up to 355M/L)
- Thermal protection:
  - Thermostats
  - RTD-PT 100
- Space heaters
- Design H
- Class “H” insulation
- Roller bearings for frame 160M and above

More options available, on request

Typical Applications:

These motors are designed to operate in areas that can release flammable dust or in atmospheres where explosions can occur due to a mixture of air and dust:

- Sugar refining plants
- Breweries
- Cement plants
- Textiles, pharmaceutical, chemical and agricultural process industries
- Other several duty applications

Fan Cover
Made of steel plate for frames 63 up to 132M and of cast iron for frames 160M and above. It offers a superior mechanical rigidity, corrosion-resistance and extended lifetime.

Bearings
WEG motors are fitted with the highest quality bearings selected from the best manufacturers in the world and designed to ensure long life of the motor even under heavy operating conditions.

Terminal Box
Made of cast iron made with plenty of internal space. The terminal box can be rotated in 90º intervals, having one or two threaded holes to connect the power supply cables. Power supply connection components are certified, then reducing short-circuit inside the terminal box. Designed in such a way that the energized components remain at a minimum safe distance from grounded components parts. In order to allow end users safety, the motors are designed with grounding lug inside and outside of the terminal box, with the inside grounding lugs duly connected from the factory. * Available as top or side mounted.

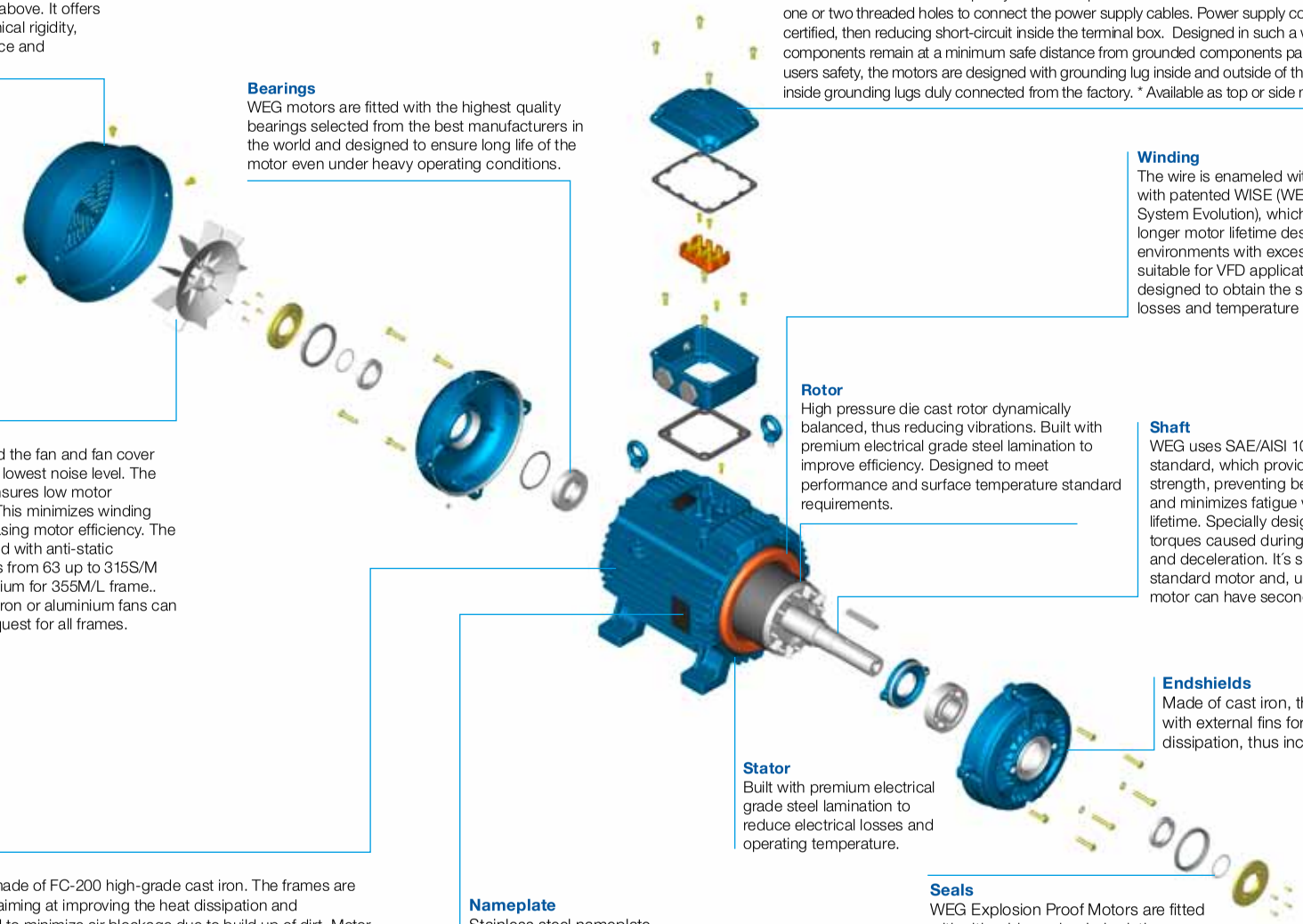

Winding
The wire is enameled with class H. Supplied with patented WISE (WEG Insulation System Evolution), which allows three times longer motor lifetime designed to work in environments with excess of moisture and suitable for VFD application. The winding is designed to obtain the smallest Joule losses and temperature rise.

Rotor
High pressure die cast rotor dynamically balanced, thus reducing vibrations. Built with premium electrical grade steel lamination to improve efficiency. Designed to meet performance and surface temperature standard requirements.

Shaft
WEG uses SAE/AISI 1040/45 steel as standard, which provides high mechanical strength, preventing bending under load and minimizes fatigue which extends lifetime. Specially designed to withstand torques caused during motor acceleration and deceleration. It´s size is larger than the standard motor and, upon special design, motor can have second shaft end.

Fan
WEG has designed the fan and fan cover having in mind the lowest noise level. The efficient cooling ensures low motor temperature rise. This minimizes winding losses, thus increasing motor efficiency. The W21 line is supplied with anti-static polypropylene fans from 63 up to 315S/M frames and aluminium for 355M/L frame.. Alternatively, cast iron or aluminium fans can be supplied on request for all frames.

Endshields
Made of cast iron, they are provided with external fins for better temperature dissipation, thus increasing bearing life.

Stator
Built with premium electrical grade steel lamination to reduce electrical losses and operating temperature.

Frame
WEG motors are made of FC-200 high-grade cast iron. The frames are provided with fins aiming at improving the heat dissipation and adequately spaced to minimize air blockage due to build up of dirt. Motor designed to ensure that surface temperature is lower than ignition temperature of the gas that is present in the environment. Mechanical components are designed towithstand an explosion inside the motor without causing any risk to outside areas since there is no flame flame propagation through flame path. The motors can be mounted in any position, horizontal and vertical, withstanding the maximum axial and radial thrusts.

Nameplate
Stainless steel nameplate ensuring a permanent record of all motor data.

Seals
WEG Explosion Proof Motors are fitted with either Lip seal or Labyrinth Tachonite as standard (see standard features list) to provide the best possible protection.

W3Seal
Exclusive WEG sealing system (tachonite + v´ring + o´ring) guarantee maximum protection against the ingress of solid and liquid contaminating

Cast Iron Frame Motors For Zone 21 - Improved Efficiency EFF2

Output		IEC Frame	Full load torque C_n (Nm)	Locked rotor current I_l/I_n	Locked rotor torque T_l/T_n	Break-down torque T_b/T_n	Inertia J kgm²	Allowable locked rotor time Hot/Cold (s)	Weight (kg)	Sound dB (A)	Rated speed (rpm)	400 V						Full load current I_n (A)
												% of full load						
												Efficiency η			Power Factor (Cos φ)			
kW	HP											50	75	100	50	75	100	
II Pole - 3000 rpm																		
0.12	0.16	63	0.41	5	2.8	3	0.000	25/55	7.7	52	2760	58	64.8	65.5	0.51	0.64	0.74	0.357
0.18	0.25	63	0.64	4.4	2.5	2.5	0.000	30/66	7.7	52	2730	63.5	68.5	69.5	0.62	0.76	0.81	0.462
0.25	0.33	63	0.85	4.5	2.5	2.5	0.000	18/40	8.2	52	2730	64	68.5	71.2	0.58	0.71	0.8	0.634
0.37	0.5	71	1.25	5.5	3	3.2	0.000	23/51	10.9	56	2810	69	73.8	74.5	0.63	0.77	0.85	0.843
0.55	0.75	71	1.89	5.7	2.7	2.7	0.000	16/35	11.6	56	2790	72.5	76.6	76.7	0.68	0.8	0.86	1.2
0.75	1	80	2.51	6.8	3.1	3.1	0.001	20/44	15.2	59	2795	76.5	80.5	80.5	0.73	0.82	0.86	1.56
1.1	1.5	80	3.74	7.8	3.4	3.4	0.001	15/33	16.4	59	2820	81	83	83.6	0.64	0.76	0.84	2.26
1.5	2	90S	4.91	7.3	2.8	2.8	0.002	14/31	20.2	62	2860	83.2	84.9	84.5	0.68	0.8	0.85	3.01
2.2	3	90L	7.35	8.4	3.7	3.5	0.003	9/20	22.5	62	2865	84	86	86.6	0.64	0.76	0.83	4.42
3	4	100L	9.7	8.9	3	3.1	0.007	12/26	32.2	67	2895	84.5	87	88.3	0.73	0.83	0.87	5.64
4	5.5	112M	13.32	8.2	2.7	3.4	0.008	17/37	42.7	64	2900	87	88.4	88.6	0.72	0.83	0.87	7.49
5.5	7.5	132S	17.95	8	2.7	3.2	0.021	19/42	61	67	2935	88.5	90	90.1	0.71	0.81	0.86	10.2
7.5	10	132S	24.01	8	2.5	2.9	0.024	13/29	66	67	2925	88.5	90.6	90.8	0.72	0.82	0.87	13.7
9.2	12.5	132M	29.91	8.5	2.8	3.1	0.028	11/24	74	67	2935	88.5	90.9	91	0.7	0.81	0.87	16.8
11	15	160M	35.72	8.5	2.8	3.3	0.053	14/31	117.9	70	2950	90	91.9	92.3	0.7	0.8	0.85	20.2
15	20	160M	47.7	8.2	2.4	3.3	0.059	12/26	130.5	70	2945	91	92	92.5	0.74	0.82	0.86	27.2
18.5	25	160L	59.63	8.8	2.5	3.2	0.068	10/22	135.2	70	2945	91.9	92.8	93.1	0.73	0.82	0.85	33.7
22	30	180M	71.43	8.6	2.7	3.3	0.119	14/31	193.7	70	2950	92.5	93.5	93.7	0.76	0.84	0.87	39
30	40	200L	94.92	7.4	2.7	2.8	0.206	31/68	248	74	2960	92.8	93.7	94	0.77	0.84	0.87	52.9
37	50	200L	118.65	7.6	2.7	2.7	0.224	25/55	260	74	2960	93.2	94	94.6	0.76	0.84	0.87	64.9
45	60	225S/M	141.9	8.5	2.4	2.9	0.448	18/40	414	82	2970	93.6	94.5	94.7	0.82	0.88	0.9	76.2
55	75	250S/M	177.67	8.9	2.6	3.4	0.502	15/33	460.8	82	2965	94	95	95	0.85	0.89	0.91	91.8
75	100	280S/M	236.1	7.7	2.2	2.9	1.271	51/112	740	83	2975	93.2	94.4	95.6	0.83	0.87	0.89	127
90	125	280S/M	295.12	8.2	2.2	2.8	1.412	42/92	780	83	2975	94.1	95.5	95.8	0.82	0.88	0.9	151
110	150	315S/M	354.15	8	2.3	2.8	1.506	38/84	830	83	2975	94.4	95.3	95.8	0.82	0.87	0.89	186
132	175	315S/M	413.17	7.8	2.2	2.7	1.742	32/70	900	83	2975	94.3	95.5	96	0.82	0.88	0.89	223
150	200	315S/M	472.99	7.9	2.2	2.7	2.118	31/68	1010	83	2970	95	95.8	96.2	0.84	0.89	0.9	250
160	220	315S/M	520.29	7.8	2.2	2.5	2.118	33/73	1010	83	2970	95	96	96.2	0.85	0.89	0.9	267
185	250	315S/M	590.25	8.2	2.4	2.8	2.118	28/62	1010	83	2975	95	95.9	96.2	0.8	0.86	0.88	315
200	270	355M/L	635.33	7.2	1.8	2.6	4.826	70/154	1490	81	2985	93.7	95.2	95.6	0.89	0.91	0.92	328
220	300	355M/L	705.93	8.5	2.2	3	5.171	65/143	1650	81	2985	95.2	96.1	96.4	0.85	0.9	0.92	358
250	340	355M/L	800.05	7.8	1.7	2.5	5.746	65/143	1750	81	2985	95.5	96.3	96.4	0.87	0.91	0.92	407
HIGH-OUTPUT DESIGN																		
75	100	250S/M	236.9	8.5	3	3.4	0.55609	10/22	490	82	2965	93	94.3	94.6	0.83	0.88	0.9	127
110	150	280S/M	354.15	8	2.3	2.8	1.50617	38/84	830	83	2975	94.4	95.3	95.8	0.82	0.87	0.89	186
IV Pole - 1500 rpm																		
0.12	0.16	63	0.79	4.2	2.4	2.5	0.00045	20/44	7	44	1415	45	54	58.5	0.46	0.56	0.67	0.442
0.18	0.25	63	1.25	4	2.2	2.5	0.00056	23/51	8.6	44	1400	53.8	59.5	62	0.52	0.63	0.72	0.582
0.25	0.33	71	1.64	5	3	3.1	0.00079	48/106	11.7	43	1410	68.5	71.5	73	0.5	0.61	0.7	0.706
0.37	0.5	71	2.52	4.4	2.7	2.8	0.00079	37/81	11.8	43	1395	68	72	73.5	0.48	0.6	0.7	1.04
0.55	0.75	80	3.68	6	2.6	2.8	0.00242	17/37	16.3	44	1430	69	73	75	0.56	0.69	0.78	1.36
0.75	1	80	4.96	5.5	2.4	2.6	0.00294	14/31	16.1	44	1415	73.5	76.2	76.2	0.62	0.74	0.83	1.71
1.1	1.5	90S	7.37	6.5	3	3	0.00504	13/29	21.7	49	1430	76	80	80.6	0.57	0.69	0.78	2.53
1.5	2	90L	9.89	6.2	2.7	2.7	0.00672	12/26	24.4	49	1420	80.3	82	81.7	0.64	0.77	0.83	3.19
2.2	3	100L	14.84	6.7	2.7	2.9	0.00842	14/31	30.2	53	1420	81	82.3	83	0.65	0.78	0.83	4.61
3	4	100L	19.93	6.5	2.7	2.7	0.00995	10/22	32.8	53	1410	83.6	85	84.7	0.68	0.79	0.86	5.94
4	5.5	112M	27.02	7.5	2.7	2.8	0.01875	12/26	46.7	56	1430	86	87.4	87.1	0.7	0.81	0.87	7.62
5.5	7.5	132S	35.96	8	2.4	3	0.04652	11/24	61.7	60	1465	85.4	87.7	88.5	0.68	0.79	0.85	10.6
7.5	10	132M	47.95	8	2.5	2.8	0.05427	8/18	64.7	60	1465	86.4	88.4	88.6	0.7	0.8	0.86	14.2
9.2	12.5	160M	60.34	6	2.2	2.4	0.06524	15/33	95	67	1455	86	87.7	88.8	0.69	0.79	0.84	17.8
11	15	160M	72.41	6	2.3	2.5	0.08029	16/35	107.8	67	1455	87.6	89.4	89.9	0.7	0.79	0.84	21
15	20	160L	96.55	6	2.3	2.4	0.10539	13/29	126.5	67	1455	89	90.4	90.6	0.69	0.79	0.84	28.4
18.5	25	180M	119.46	7	2.7	2.8	0.17939	18/40	183.2	64	1470	89.8	91.5	92.1	0.68	0.79	0.84	34.5
22	30	180L	143.35	7.5	2.8	2.8	0.21528	14/31	189.5	64	1470	91	92.2	92.4	0.67	0.78	0.83	41.4
30	40	200L	190.48	6.5	2.2	2.5	0.33095	17/37	247.5	69	1475	91.8	93	93	0.75	0.82	0.85	54.8
37	50	225S/M	237.3	7.2	2.3	2.7	0.62988	20/44	353	70	1480	91.2	92.2	92.8	0.76	0.85	0.88	65.4
45	60	225S/M	285.72	7	2.3	2.7	0.76985	16/35	382.2	70	1475	91	92.9	93.5	0.76	0.85	0.88	78.9
55	75	250S/M	357.15	7	2.3	2.6	0.97981	16/35	451.4	70	1475	93	93.5	93.7	0.78	0.86	0.89	95.2
75	100	280S/M	472.99	6.7	2.1	2.4	2.32858	44/97	735	76	1485	92.4	93.8	94.3	0.81	0.86	0.88	130
90	125	280S/M	591.24	7.1	2.4	2.5	2.56947	31/68	736.9	76	1485	92.3	93.9	94.2	0.8	0.86	0.88	157
110	150	315S/M	709.49	7.1	2.3	2.6	2.81036	27/59	866.1	77	1485	92.8	94.4	94.4	0.78	0.85	0.88	191
132	175	315S/M	827.74	7.3	2.5	2.6	3.77391	31/68	1010	77	1485	93.3	94.7	95.1	0.78	0.85	0.88	228
160	220	315S/M	1044.1	7	2.4	2.7	3.77391	22/48	1010	77	1480	93.3	95.1	95.5	0.75	0.83	0.87	278
200	270	315B	1277.08	6.8	1.9	2.9	4.0216	33/73	1240	79	1485	93.8	95	95	0.68	0.77	0.81	375
200	270	355M/L	1272.8	6.6	2.3	2.2	6.34151	44/97	1525	79	1490	94.8	95.2	95.4	0.78	0.85	0.87	348
250	340	315B	1613.61	6.2	1.8	2.6	5.1713	29/64	1330	79	1480	94.5	95.2	95.2	0.72	0.8	0.83	457
250	340	355M/L	1602.78	6.9	2.2	2.5	7.57882	36/79	1615	79	1490	94.3	95.2	95.8	0.8	0.86	0.88	428
HIGH OUTPUT DESIGN																		
75	100	250S/M	474.59	7.2	2.4	2.6	1.15478	12/26	510	70	1480	92.5	93.6	93.7	0.77	0.85	0.87	133
110	150	280S/M	709.49	7.1	2.3	2.6	2.81036	27/59	865	76	1485	92.8	94.4	94.4	0.78	0.85	0.88	191

Notes:
**Class "F" insulation with ΔT105K*
Standard voltage, connection and frequency: 220-240V Δ 50Hz *380-415V Δ 50Hz*
380-415V Y 50Hz *660-690V Y 50Hz*
The values shown are subject to change without prior notice. To obtain guaranteed values please access our website.

Cast Iron Frame Motors For Zone 21 - Improved Efficiency EFF2

Output		380 V								415 V							
		Rated speed (rpm)	% of full load						Full load current I_n (A)	Rated speed (rpm)	% of full load						Full load current I_n (A)
			Efficiency η			Power Factor (Cos φ)					Efficiency η			Power Factor (Cos φ)			
kW	HP		50	75	100	50	75	100			50	75	100	50	75	100	
II Pole - 3000 rpm																	
0,12	0,16	2730	60	66	67	0,56	0,69	0,79	0,344	2790	55	63	63	0,48	0,61	0,71	0,373
0,18	0,25	2700	65	69	69	0,66	0,79	0,83	0,478	2760	62	68	70	0,58	0,73	0,78	0,459
0,25	0,33	2700	65,5	69,5	70	0,62	0,75	0,83	0,654	2755	62,5	67,5	71,9	0,55	0,68	0,77	0,628
0,37	0,5	2790	70,5	73,8	74,3	0,68	0,8	0,88	0,86	2825	67,5	73,8	74,5	0,6	0,74	0,82	0,843
0,55	0,75	2760	73,5	76,7	76,5	0,73	0,82	0,88	1,24	2810	71,5	76,5	76,7	0,64	0,77	0,84	1,19
0,75	1	2770	77	80,5	79,8	0,76	0,85	0,88	1,62	2805	76	80,5	80,5	0,7	0,79	0,84	1,54
1,1	1,5	2800	82	83,2	82,8	0,69	0,8	0,86	2,35	2835	80	82,5	83,5	0,58	0,72	0,81	2,26
1,5	2	2845	83,6	84,8	84,3	0,73	0,83	0,87	3,11	2870	82,8	84,8	84,6	0,64	0,77	0,83	2,97
2,2	3	2855	84,5	86	86	0,69	0,8	0,86	4,52	2875	83,5	86	86,6	0,58	0,72	0,8	4,42
3	4	2890	85	86,7	87,5	0,77	0,85	0,88	5,92	2900	84	86,7	88	0,69	0,81	0,86	5,51
4	5,5	2890	87,5	88,3	88,3	0,77	0,85	0,89	7,73	2910	86,5	88,3	88,5	0,68	0,81	0,86	7,31
5,5	7,5	2930	89	90,3	90,2	0,75	0,83	0,87	10,6	2940	88	89,8	90	0,68	0,78	0,84	10,1
7,5	10	2920	89	90,5	90,6	0,75	0,84	0,88	14,3	2930	88	90,6	90,9	0,7	0,8	0,86	13,3
9,2	12,5	2930	89	91	91	0,76	0,85	0,89	17,3	2940	88	90,8	91	0,66	0,77	0,85	16,5
11	15	2945	90,5	92	92,2	0,74	0,83	0,87	20,8	2955	89,5	91,8	92,2	0,66	0,77	0,83	20
15	20	2940	91,5	92	92,4	0,78	0,85	0,87	28,4	2950	90,5	91,9	92,4	0,7	0,8	0,85	26,6
18,5	25	2940	92,1	92,8	93	0,76	0,84	0,87	34,7	2950	91,7	92,7	93	0,7	0,8	0,83	33,3
22	30	2945	92,8	93,5	93,5	0,79	0,86	0,89	40,2	2955	92,2	93,5	93,7	0,73	0,82	0,85	38,4
30	40	2955	93	93,7	93,8	0,81	0,86	0,88	55,2	2965	92,6	93,7	94,1	0,74	0,82	0,86	51,6
37	50	2955	93,4	94	94,4	0,8	0,86	0,88	67,7	2965	93	94	94,6	0,72	0,82	0,86	63,3
45	60	2965	93,9	94,5	94,5	0,84	0,89	0,91	79,5	2970	93,3	94,5	94,6	0,8	0,87	0,89	74,4
55	75	2960	94,2	94,7	94,7	0,87	0,9	0,92	95,9	2970	93,8	95	95	0,83	0,88	0,9	89,5
75	100	2970	93,4	94,4	95,4	0,85	0,88	0,9	133	2975	93	94,4	95,5	0,81	0,86	0,88	124
90	125	2975	94,3	95,5	95,8	0,84	0,89	0,9	159	2980	93,9	95,5	95,8	0,8	0,87	0,89	147
110	150	2970	94,6	95,4	95,7	0,84	0,88	0,9	194	2975	94,2	95,2	95,8	0,8	0,86	0,88	182
132	175	2970	94,5	95,5	96	0,84	0,89	0,9	232	2975	94,1	95,4	96	0,8	0,87	0,89	215
150	200	2970	95	95,8	96,1	0,86	0,9	0,91	261	2975	95	95,8	96,2	0,82	0,88	0,9	241
160	220	2965	95	95,9	96,1	0,86	0,9	0,91	278	2975	94,9	96	96,2	0,83	0,88	0,89	260
185	250	2970	95,2	95,9	96,2	0,82	0,89	0,89	328	2975	94,8	95,8	96,2	0,78	0,84	0,87	308
200	270	2980	93,9	95,2	95,5	0,9	0,92	0,92	346	2985	93,5	95,1	95,6	0,88	0,9	0,91	320
220	300	2985	95,5	96,2	96,4	0,87	0,91	0,92	377	2990	95	96	96,3	0,83	0,89	0,91	349
250	340	2980	95,5	96,3	96,4	0,89	0,92	0,93	424	2985	95,4	96,3	96,4	0,86	0,91	0,92	392
HIGH-OUTPUT DESIGN																	
75	100	2960	93,2	94,3	94,3	0,85	0,89	0,91	133	2965	92,8	94,3	94,6	0,81	0,87	0,9	123
110	150	2970	94,6	95,4	95,7	0,84	0,88	0,9	194	2975	94,2	95,2	95,8	0,8	0,86	0,88	182
IV Pole - 1500 rpm																	
0.12	0.16	1405	47	55	59	0.49	0.6	0.7	0.441	1425	42	52	58	0.43	0.52	0.63	0.45
0.18	0.25	1385	55.8	60.5	62.5	0.55	0.67	0.76	0.576	1410	51	57.5	61	0.48	0.59	0.69	0.59
0.25	0.33	1400	70	72	72.5	0.53	0.65	0.72	0.728	1420	67	71	73	0.47	0.58	0.68	0.70
0.37	0.5	1385	70	73	73.6	0.52	0.65	0.73	1.05	1405	65	71	73.2	0.44	0.56	0.67	1.05
0.55	0.75	1420	70	73.5	75	0.61	0.73	0.81	1.38	1440	67	72.5	74.6	0.53	0.66	0.75	1.37
0.75	1	1400	75	76.5	76	0.66	0.78	0.85	1.76	1430	72	76	76.2	0.59	0.71	0.81	1.69
1.1	1.5	1415	77.5	80.5	80.5	0.63	0.74	0.81	2.56	1435	74.5	79	80.3	0.53	0.64	0.74	2.58
1.5	2	1410	81.2	82.2	81	0.68	0.8	0.85	3.31	1430	79.3	81.5	81.8	0.61	0.74	0.81	3.15
2.2	3	1410	81.5	82	81.7	0.69	0.81	0.85	4.81	1430	80.5	82.3	83	0.61	0.75	0.81	4.55
3	4	1400	84	84.9	84.2	0.72	0.82	0.87	6.22	1420	83.2	85.1	84.9	0.65	0.77	0.84	5.85
4	5.5	1420	86.5	87.5	86.7	0.74	0.84	0.89	7.88	1440	85.2	87.2	86.7	0.67	0.78	0.84	7.64
5.5	7.5	1460	86.7	88.3	88.3	0.73	0.82	0.87	10.9	1470	84.2	87	88.4	0.64	0.75	0.83	10.4
7.5	10	1465	87	88.6	88.4	0.75	0.84	0.88	14.6	1470	85.6	88	88.6	0.65	0.77	0.83	14.2
9.2	12.5	1450	86.5	87.8	88.2	0.73	0.82	0.85	18.6	1460	85.5	87.4	88.8	0.64	0.76	0.82	17.6
11	15	1450	88.3	89.6	89.2	0.74	0.82	0.85	22	1460	86.8	89	89.8	0.65	0.76	0.82	20.8
15	20	1450	89.5	90.5	90.1	0.73	0.82	0.86	29.4	1460	88.4	90.3	90.6	0.67	0.78	0.83	27.8
18.5	25	1465	90.3	91.7	91.7	0.72	0.81	0.85	36.1	1470	89.3	91.3	92.1	0.65	0.76	0.82	34.1
22	30	1465	91.5	92.4	92.3	0.72	0.81	0.85	42.6	1475	90.5	92	92.5	0.63	0.75	0.81	40.8
30	40	1470	92.2	93	92.6	0.78	0.84	0.86	57.2	1480	91.5	93	93.2	0.72	0.8	0.84	53.3
37	50	1475	91.6	92.4	92.5	0.79	0.86	0.89	68.3	1480	90.8	92.1	92.9	0.72	0.83	0.87	63.7
45	60	1475	91.3	92.8	93.5	0.8	0.87	0.89	82.2	1480	91	92.9	93.5	0.72	0.83	0.87	77
55	75	1475	92.8	93.5	93.4	0.83	0.88	0.91	98.3	1480	92.5	93.4	93.6	0.77	0.85	0.89	91.9
75	100	1480	92.8	93.9	94.2	0.83	0.87	0.88	137	1485	92.2	93.8	94.3	0.8	0.85	0.87	127
90	125	1480	92.6	94.1	94.2	0.82	0.87	0.89	163	1485	92	93.9	94.2	0.78	0.85	0.88	151
110	150	1480	92.8	93.6	94.2	0.8	0.86	0.88	202	1485	92.8	94.4	94.5	0.76	0.83	0.87	186
132	175	1480	93.5	94.9	95.1	0.81	0.86	0.89	237	1485	93.3	94.7	95.1	0.76	0.84	0.87	222
160	220	1480	93	95	95.4	0.78	0.85	0.88	290	1485	94.2	95.1	95.5	0.73	0.82	0.86	271
200	270	1480	94.2	95.1	95	0.72	0.8	0.82	390	1485	93.4	94.8	95	0.64	0.74	0.8	366
200	270	1485	94.8	95	95.2	0.8	0.86	0.88	363	1490	94.5	95.1	95.3	0.76	0.84	0.86	339
250	340	1480	95	95.4	95.2	0.76	0.83	0.85	469	1485	94	95	95.1	0.67	0.77	0.81	452
250	340	1485	94.5	95.2	95.7	0.82	0.87	0.89	446	1490	94.1	95	95.7	0.77	0.85	0.87	418
HIGH OUTPUT DESIGN																	
75	100	1475	92.6	93.4	93.5	0.8	0.86	0.88	138	1480	92.6	93.7	93.6	0.74	0.84	0.87	128
110	150	1480	92.8	93.6	94.2	0.8	0.86	0.88	202	1485	92.8	94.4	94.5	0.76	0.83	0.87	186

Cast Iron Frame Motors For Zone 21 - Improved Efficiency EFF2

Output		IEC Frame	Full load torque C_n (Nm)	Locked rotor current I_l/I_n	Locked rotor torque T_l/T_n	Break-down torque T_b/T_n	Inertia J kgm²	Allowable locked rotor time Hot/Cold (s)	Weight (kg)	Sound dB (A)	Rated speed (rpm)	400 V						Full load current I_n (A)
												% of full load						
												Efficiency η			Power Factor (Cos φ)			
kW	HP											50	75	100	50	75	100	
VI Pole - 1000 rpm																		
0.12	0.16	63	1.23	3.5	2.2	2.1	0.00067	41/90	8	43	910	42	50	54.5	0.46	0.55	0.65	0.489
0.18	0.25	71	1.94	3.3	2	2.2	0.00079	50/110	10.5	43	905	46	54	57	0.46	0.55	0.62	0.735
0.25	0.33	71	2.58	3.5	2.2	2.2	0.00096	43/95	11.5	43	900	53	60.5	64	0.4	0.5	0.57	0.989
0.37	0.5	80	3.78	4.5	2.5	2.5	0.00242	12/26	15.1	43	930	54	62.5	65	0.45	0.57	0.67	1.23
0.55	0.75	80	5.66	4.5	2.3	2.3	0.00311	10/22	16.8	43	930	60	65	67	0.5	0.63	0.73	1.62
0.75	1	90S	7.63	4.8	2.1	2.1	0.00504	16/35	21.1	45	920	70	72.6	72.4	0.54	0.67	0.76	1.97
1.1	1.5	90L	11.39	4.8	2.3	2.2	0.00672	14/31	24.2	45	925	71	75.2	75.2	0.5	0.64	0.75	2.82
1.5	2	100L	14.94	4.8	2.2	2.5	0.01121	18/40	29.3	44	940	74	77.3	77.5	0.53	0.66	0.74	3.78
2.2	3	112M	22.42	5	2.2	2.3	0.01682	14/31	37.4	48	940	77.5	80.5	80.1	0.53	0.66	0.74	5.36
3	4	132S	29.27	5.3	2	2.2	0.03489	20/44	55	52	960	80	82.7	82.5	0.58	0.7	0.77	6.82
4	5.5	132M	40.24	6	2.1	2.3	0.05039	18/40	65	52	960	83.6	85.5	85.8	0.59	0.7	0.77	8.74
5.5	7.5	132M	54.87	6.4	2.3	2.4	0.06202	14/31	74.1	52	960	84	85.8	85.8	0.54	0.66	0.74	12.5
7.5	10	160M	72.41	6.1	2.3	2.6	0.12209	17/37	107.5	56	970	87	88.2	88	0.62	0.74	0.81	15.2
9.2	12.5	160L	90.51	6.5	2.3	2.8	0.14364	12/26	115	56	970	86.5	88	87.6	0.61	0.74	0.81	18.7
11	15	160L	108.62	6.6	2.4	2.9	0.17595	13/29	133.6	56	970	87.2	88.3	88.3	0.62	0.75	0.82	21.9
15	20	180L	145.57	7.5	2.5	2.6	0.30338	9/20	176.3	56	965	89.1	90.1	89.8	0.8	0.88	0.91	26.5
18.5	25	200L	180.1	6	2.1	2.3	0.3767	15/33	226.2	58	975	89.7	90.7	90.2	0.74	0.82	0.86	34.4
22	30	200L	216.12	6	2.3	2.4	0.41258	14/31	238.5	58	975	89	90.9	91.3	0.7	0.79	0.84	41.4
30	40	225S/M	285.24	7.2	2.6	2.7	0.98842	20/44	366	61	985	90.5	91.8	91.8	0.77	0.84	0.87	54.2
37	50	250S/M	358.37	7.5	2.7	2.6	1.22377	18/40	433.8	61	980	90.2	92.4	92.5	0.77	0.85	0.87	66.4
45	60	280S/M	427.86	6.8	2.4	2.6	2.29824	24/53	606.3	66	985	90.5	92.3	92.6	0.68	0.78	0.83	84.5
55	75	280S/M	534.82	6.5	2.3	2.5	2.64298	23/51	657	66	985	91.6	93.2	93.5	0.71	0.82	0.85	100
75	100	315S/M	713.09	6.7	2.3	2.5	3.44737	20/44	775	69	985	91.6	93.5	93.7	0.71	0.81	0.85	136
90	125	315S/M	891.37	6.3	2.1	2.3	3.67719	18/40	818	69	985	92.5	94	93.9	0.71	0.81	0.85	163
110	150	315S/M	1069.64	6.4	2.3	2.4	5.28596	18/40	990	69	985	93.4	94.4	94.5	0.71	0.8	0.84	200
132	175	355M/L	1241.61	6.1	2	2.3	8.10159	90/198	1385	73	990	92.5	94.7	94.7	0.65	0.75	0.8	251
160	220	315B	1560.88	7	1.9	2.5	7.1	25/55	1350	69	990	93.5	94.9	94.9	0.68	0.78	0.82	297
160	220	355M/L	1560.88	6.2	1.9	2.1	9.53128	72/158	1484.8	73	990	93	95	95.3	0.67	0.77	0.82	295
200	270	315B	1915.63	6.6	2	2.6	8.6038	19/42	1419	69	990	94.8	95.2	95	0.71	0.8	0.84	362
200	270	355M/L	1915.63	6.3	2.1	2.3	12.39067	85/187	1700	73	990	93.5	94.5	94.8	0.7	0.78	0.81	376
250	340	355M/L	2400.15	6.1	2.2	2.2	14.77349	64/141	1830	73	995	94	95.1	95.6	0.7	0.79	0.82	460
HIGH OUTPUT DESIGN																		
45	60	250S/M	430.04	8	2.8	2.8	1.55324	18/40	490	61	980	91	92.3	92.6	0.76	0.84	0.87	79.7
75	100	280S/M	713.09	6.7	2.3	2.5	3.44737	20/44	775	66	985	91.6	93.5	93.7	0.71	0.81	0.85	136
VIII Pole - 750 rpm																		
0.12	0.16	71	2.5	1.64	1.9	2.1	0.00079	44/97	12.1	41	685	36	44.2	47.2	0.4	0.49	0.56	0.655
0.18	0.25	80	3.1	2.51	1.9	2.1	0.00242	16/35	13.7	42	700	40	49	54.2	0.43	0.53	0.62	0.773
0.25	0.33	80	3	3.41	1.8	1.8	0.00294	21/46	14.8	42	680	47.5	55	57	0.45	0.56	0.65	0.974
0.37	0.5	90S	3.5	5.05	2.1	2.1	0.00448	29/64	18	43	695	51	59	61	0.43	0.53	0.64	1.37
0.55	0.75	90L	3.5	7.63	2.1	2.1	0.00616	21/46	21.5	43	690	57	63	65	0.45	0.56	0.65	1.88
0.75	1	100L	4.2	9.96	2	2.1	0.00952	30/66	27.5	50	705	65	70	71	0.42	0.54	0.63	2.42
1.1	1.5	100L	4.1	15.05	1.7	2.1	0.01289	23/51	30.5	50	700	66	71.5	72.2	0.43	0.56	0.65	3.38
1.5	2	112M	4.6	19.79	2.5	2.7	0.0243	32/70	43	46	710	76.5	77.8	78	0.48	0.6	0.69	4.02
2.2	3	132S	6.2	29.47	2.4	2.7	0.07527	23/51	70	48	715	78.5	81.5	82.5	0.53	0.65	0.73	5.27
3	4	132M	5.8	39.57	2.4	2.7	0.08531	22/48	75	48	710	78	82.7	83.5	0.52	0.64	0.72	7.2
4	5.5	160M	5.2	52.92	2.2	2.7	0.12209	33/73	105	51	730	81.3	84.3	86	0.47	0.6	0.69	9.73
5.5	7.5	160M	5.2	72.16	2.3	2.7	0.14364	23/51	114	51	730	81.5	84.1	85.2	0.46	0.59	0.69	13.5
7.5	10	160L	4.9	96.88	2	2.5	0.16518	15/33	127	51	725	83.5	85.7	85.5	0.51	0.63	0.72	17.6
9.2	12.5	180M	6.7	120.27	2.2	2.9	0.23443	11/24	163	51	730	83	86	85.9	0.64	0.75	0.81	19.1
11	15	180L	6.8	145.32	2.3	2.5	0.2758	11/24	167.6	51	725	87	88.5	88.3	0.68	0.79	0.84	21.4
15	20	200L	4.6	192.44	2	2.1	0.3767	23/51	225.4	53	730	86.5	88.6	89	0.56	0.68	0.75	32.4
18.5	25	225S/M	6.9	240.55	2.1	2.8	0.84722	17/37	341	56	730	88.5	90.1	90	0.72	0.8	0.85	34.9
22	30	225S/M	7.5	288.66	2.2	2.7	0.98842	19/42	364.8	56	730	89	91	91	0.73	0.82	0.85	41.1
30	40	250S/M	7.9	384.87	2.3	2.9	1.22377	17/37	440	56	730	89.5	91.2	91.6	0.7	0.79	0.84	56.3
37	50	280S/M	6.5	474.59	1.9	2.3	2.29824	29/64	590	59	740	90.5	92.2	92.3	0.67	0.77	0.81	71.4
45	60	280S/M	6.5	569.51	2	2.4	2.64298	26/57	643	59	740	90.5	92.1	92.3	0.65	0.75	0.8	88
55	75	315S/M	6.5	711.89	1.9	2.2	3.10263	27/59	745	62	740	91.2	93.1	93	0.69	0.78	0.82	104
75	100	315S/M	6.6	949.18	1.9	2.2	4.36666	20/44	876	62	740	92	93.4	93.5	0.67	0.79	0.82	141
90	125	315S/M	6.8	1186.48	2.1	2.4	5.28596	23/51	970	62	740	92.5	93.8	94.2	0.7	0.78	0.83	166
110	150	355M/L	6.4	1423.78	1.5	2.2	11.9324	41/90	1390	70	740	92.5	94.1	94.5	0.63	0.74	0.8	210
132	175	315B	6.9	1661.07	1.9	2.6	7.765	20/44	1399	62	740	94	94.5	94.4	0.63	0.74	0.79	255
132	175	355M/L	6.5	1661.07	1.6	2.2	13.18845	47/103	1445	70	740	93	94.5	94.8	0.63	0.73	0.79	254
160	220	315B	7.3	2088.2	2.1	2.8	9.75	18/40	1534	62	740	93.1	94.7	94.7	0.6	0.72	0.77	317
160	220	355M/L	6.6	2088.2	1.6	2.2	16.32856	42/92	1620	70	740	93.3	94.7	94.7	0.64	0.75	0.8	305
200	270	355M/L	6.8	2562.8	1.6	2.1	19.46866	37/81	1830	70	740	93.3	94.6	95.2	0.6	0.72	0.79	384
HIGH OUTPUT DESIGN																		
55	75	280S/M	6.5	711.89	1.9	2.2	3.10263	27/59	745	59	740	91.2	93.1	93	0.69	0.78	0.82	104

Notes:
**Class "F" insulation with ΔT105K*
Standard voltage, connection and frequency: 220-240V Δ 50Hz *380-415V Δ 50Hz*
380-415V Y 50Hz *660-690V Y 50Hz*
The values shown are subject to change without prior notice. To obtain guaranteed values please access our website.

Cast Iron Frame Motors For Zone 21 - Improved Efficiency EFF2

Output		380 V								415 V							
		Rated speed (rpm)	% of full load						Full load current I_n (A)	Rated speed (rpm)	% of full load						Full load current I_n (A)
			Efficiency η			Power Factor (Cos φ)					Efficiency η			Power Factor (Cos φ)			
kW	HP		50	75	100	50	75	100			50	75	100	50	75	100	
VI Pole - 1000 rpm																	
0.12	0.16	900	45	52	55.5	0.49	0.58	0.68	0.483	915	39	48	53	0.43	0.52	0.62	0.508
0.18	0.25	895	49	55.5	57.5	0.49	0.59	0.65	0.732	910	43	52	56.5	0.44	0.52	0.59	0.751
0.25	0.33	890	56	63	65.3	0.44	0.55	0.61	0.954	905	50	58	62.5	0.37	0.46	0.54	1.03
0.37	0.5	920	56	64	66	0.49	0.62	0.72	1.18	935	52	61	64	0.42	0.54	0.64	1.26
0.55	0.75	920	62	65.8	68	0.54	0.67	0.77	1.6	935	58	64	66	0.47	0.59	0.68	1.7
0.75	1	910	71.5	72.8	71.5	0.58	0.71	0.79	2.02	930	68.5	72.4	72.4	0.5	0.64	0.73	1.97
1.1	1.5	915	72	75.5	74.8	0.55	0.69	0.78	2.86	935	70	75.2	75.2	0.46	0.61	0.72	2.83
1.5	2	930	75	77.5	77	0.58	0.7	0.76	3.89	950	73	77.3	77.6	0.5	0.63	0.71	3.79
2.2	3	930	79	80.8	79.7	0.58	0.7	0.76	5.52	950	76	80.3	80.5	0.5	0.63	0.72	5.28
3	4	955	81	83	82	0.61	0.72	0.79	7.04	965	79	82.5	82.6	0.53	0.66	0.74	6.83
4	5.5	955	84.5	85.7	85.4	0.61	0.72	0.79	9.01	965	82.6	85.3	85.9	0.56	0.67	0.75	8.64
5.5	7.5	955	85	86.1	85.6	0.58	0.7	0.77	12.7	965	83	85.5	86	0.5	0.62	0.71	12.5
7.5	10	965	87.5	88.4	87.5	0.66	0.78	0.83	15.7	970	86.5	88	88	0.58	0.71	0.79	15
9.2	12.5	970	87.5	88.2	87.5	0.65	0.76	0.82	19.5	975	85.5	87.8	87.5	0.56	0.71	0.79	18.5
11	15	970	88	88.5	88	0.67	0.78	0.84	22.6	975	86.5	88	88.3	0.58	0.72	0.8	21.7
15	20	960	89	90	89.5	0.82	0.89	0.91	28	970	89	90.5	90.5	0.78	0.87	0.9	25.6
18.5	25	970	90	90.5	89.8	0.76	0.84	0.87	36	980	89.3	90.5	90.5	0.72	0.8	0.84	33.9
22	30	970	89.6	91	91.2	0.74	0.82	0.85	43.1	980	88.4	90.7	91.3	0.66	0.76	0.82	40.9
30	40	980	91	91.8	91.6	0.8	0.86	0.88	56.5	985	90	91.8	92.2	0.73	0.81	0.86	52.6
37	50	980	90.5	92.5	92.4	0.8	0.86	0.88	69.1	985	89.5	92.4	92.6	0.73	0.82	0.86	64.6
45	60	985	91	92.3	92.6	0.72	0.81	0.85	86.9	990	90	92.3	92.7	0.64	0.76	0.82	82.4
55	75	985	92	93.2	93.4	0.74	0.84	0.87	103	990	91.2	93.2	93.6	0.68	0.8	0.84	97.3
75	100	985	92	93.5	93.5	0.74	0.82	0.86	142	990	91.2	93.5	93.8	0.69	0.8	0.84	132
90	125	985	92.8	93.9	93.6	0.74	0.83	0.86	170	990	92.2	93.9	93.9	0.69	0.79	0.84	159
110	150	985	93.6	94.3	94.3	0.74	0.82	0.85	208	985	93.2	94.5	94.6	0.69	0.79	0.83	195
132	175	990	93	94.7	94.5	0.7	0.8	0.82	259	995	92	94.7	94.7	0.6	0.7	0.77	252
160	220	990	94	94.9	94.7	0.72	0.81	0.84	306	990	93	94.9	94.9	0.64	0.75	0.8	293
160	220	990	93.5	95.2	95.2	0.73	0.8	0.84	304	990	92.5	94.9	95.4	0.63	0.74	0.8	292
200	270	990	95.1	95.3	94.9	0.75	0.82	0.85	377	990	94.4	95.1	95	0.67	0.78	0.83	353
200	270	990	94	94.7	94.8	0.74	0.81	0.83	386	990	93	94.3	94.8	0.66	0.75	0.79	372
250	340	995	94.3	95.2	95.5	0.74	0.81	0.83	479	995	93.7	95	95.8	0.67	0.77	0.81	448
HIGH OUTPUT DESIGN																	
45	60	980	91.5	92.3	92.5	0.79	0.86	0.88	83	985	90.5	92.3	92.7	0.73	0.82	0.86	77.6
75	100	985	92	93.5	93.5	0.74	0.82	0.86	142	990	91.2	93.5	93.8	0.69	0.8	0.84	132
VIII Pole - 750 rpm																	
0.12	0.16	675	40	48	50	0.44	0.52	0.6	0.608	695	32	40.5	45	0.37	0.47	0.53	0.7
0.18	0.25	690	43	52	54.5	0.45	0.56	0.65	0.772	710	37	46	53	0.41	0.5	0.59	0.801
0.25	0.33	670	50.5	56.5	56.5	0.48	0.59	0.69	0.974	690	45	53.5	56.5	0.42	0.53	0.61	1.01
0.37	0.5	685	54	61	62	0.46	0.56	0.67	1.35	700	48	57	60	0.4	0.5	0.6	1.43
0.55	0.75	680	59	64.5	65.5	0.48	0.59	0.69	1.85	700	55	61.5	64.5	0.41	0.52	0.61	1.94
0.75	1	695	67	71	70.5	0.46	0.58	0.66	2.45	710	63	69	70.5	0.38	0.5	0.6	2.47
1.1	1.5	690	68	72	72	0.47	0.6	0.68	3.41	710	64	70.5	72.2	0.4	0.52	0.62	3.42
1.5	2	700	77.5	78	77.7	0.52	0.63	0.7	4.19	715	74.5	77	78.1	0.46	0.58	0.66	4.05
2.2	3	710	79.5	81.8	82.1	0.56	0.68	0.75	5.43	720	77.5	81.2	82.6	0.5	0.62	0.71	5.22
3	4	705	79.5	83	83	0.54	0.66	0.74	7.42	715	76.5	82.4	83.5	0.5	0.62	0.7	7.14
4	5.5	725	82.6	84.8	85.9	0.51	0.64	0.72	9.83	730	80	83.7	86	0.44	0.57	0.66	9.8
5.5	7.5	725	82.5	84.7	85.2	0.5	0.63	0.72	13.6	730	80.5	83.5	85	0.42	0.55	0.66	13.6
7.5	10	720	84.5	86	85.3	0.54	0.66	0.74	18.1	730	82.5	85.5	85.5	0.48	0.6	0.7	17.4
9.2	12.5	725	84	86.1	85.5	0.69	0.79	0.84	19.5	730	82	85.9	85.9	0.59	0.72	0.79	18.9
11	15	720	87.5	88.3	87.8	0.71	0.81	0.85	22.4	730	86.5	88.6	88.5	0.65	0.77	0.83	20.8
15	20	725	87.5	88.9	88.9	0.61	0.72	0.77	33.3	730	85.5	88.3	88.9	0.5	0.64	0.72	32.6
18.5	25	730	88.8	90	89.8	0.75	0.83	0.86	36.4	735	88.2	90.3	90.2	0.68	0.78	0.84	34
22	30	730	89.4	90.9	90.5	0.76	0.84	0.86	42.9	735	88.6	91	91.2	0.71	0.8	0.84	40
30	40	730	90	91.3	91.3	0.73	0.81	0.85	58.7	735	89	91.1	91.8	0.66	0.77	0.83	54.8
37	50	735	91	92.2	92.1	0.7	0.79	0.82	74.4	740	90	92.2	92.4	0.64	0.75	0.79	70.5
45	60	735	91	92.2	92	0.7	0.77	0.82	90.6	740	90	92	92.3	0.6	0.72	0.78	87
55	75	735	91.6	93.2	92.8	0.72	0.8	0.83	108	740	90.7	93	93	0.65	0.76	0.8	103
75	100	735	92.4	93.3	93.3	0.7	0.8	0.83	147	740	91.6	93.4	93.4	0.64	0.78	0.81	138
90	125	735	92.9	93.9	94	0.73	0.81	0.84	173	740	92.1	93.7	94.2	0.67	0.75	0.81	164
110	150	740	93	94.2	94.5	0.66	0.77	0.82	216	745	92	94.1	94.5	0.6	0.71	0.78	208
132	175	740	94.6	94.8	94.3	0.68	0.77	0.81	263	745	93.4	94.2	94.4	0.59	0.71	0.77	253
132	175	740	93.5	94.6	94.8	0.66	0.75	0.81	261	745	92.5	94.4	94.8	0.6	0.71	0.77	252
160	220	740	93.6	94.9	94.6	0.66	0.75	0.79	325	745	92.5	94.7	94.7	0.56	0.68	0.75	313
160	220	740	93.8	94.8	94.8	0.68	0.77	0.81	317	745	92.8	94.7	94.7	0.6	0.72	0.79	298
200	270	740	93.8	94.8	95.1	0.65	0.75	0.81	394	745	92.8	94.4	95.2	0.56	0.69	0.77	380
HIGH OUTPUT DESIGN																	
55	75	735	91.6	93.2	92.8	0.72	0.8	0.83	108	740	90.7	93	93	0.65	0.76	0.8	103

Cast Iron Frame Motors For Zone 21 Premium Efficiency EFF1

Standard Features:

- Three-phase, multivoltage, IP66, TEFC
- Output: 0.12 up to 250kW
- Frames: 63 up to 355M/L
- Voltage: 220-240/380-415V (up to 100L)
  380-415/660V (from 112M and up)
- Class “F” insulation (ΔT=80K)
- Continuous duty: S1
- Design N
- Ambient temperature: 40°C, at 1000 m.a.s.l.
- Squirrel cage rotor/Aluminium die cast
- Oil Seal (frames 63 up to 80)
- W3Seal (frames 90S up to 355M/L)
- Anti-condensation drain holes
- Temperature Classification: Zone 21-maximum guaranteed external surface temperature T125ºC temperature limitation because of the presence of dust clouds (for material with ignition temperature above 125ºC) and presence of dust layers (up to 5mm)
- Regreasing nipples from frame 225S/M and above
- Metric thread cable entries in terminal box
- Thermistors (1 per phase) 140°C
- Suitable for Inverter Duty applications
- Color: RAL 5009

Options Available:

- Degree of Protection: IP65
- Bearing seals:
  - Oil seal (frames 90S up to 355M/L)
- Thermal protection:
  - Thermostats
  - RTD-PT 100
- Space heaters
- Design H
- Class “H” insulation
- Roller bearings for frame 160M and above

More options available, on request

Typical Applications:

These motors are designed to operate in areas that can release flammable dust or in atmospheres where explosions can occur due to a mixture of air and dust:

- Sugar refining plants
- Breweries
- Cement plants
- Textiles, pharmaceutical, chemical and agricultural process industries
- Other several duty applications

Fan Cover
Made of steel plate for frames 63 up to 132M and of cast iron for frames 160M and above. It offers a superior mechanical rigidity, corrosion-resistance and extended lifetime.

Bearings
WEG motors are fitted with the highest quality bearings selected from the best manufacturers in the world and designed to ensure long life of the motor even under heavy operating conditions.

Terminal Box
Made of cast iron made with plenty of internal space. The terminal box can be rotated in 90° intervals, having one or two threaded holes to connect the power supply cables. Power supply connection components are certified, then reducing short-circuit inside the terminal box. Designed in such a way that the energized components remain at a minimum safe distance from grounded components parts. In order to allow end users safety, the motors are designed with grounding lug inside and outside of the terminal box, with the inside grounding lugs duly connected from the factory. * Available as top or side mounted.

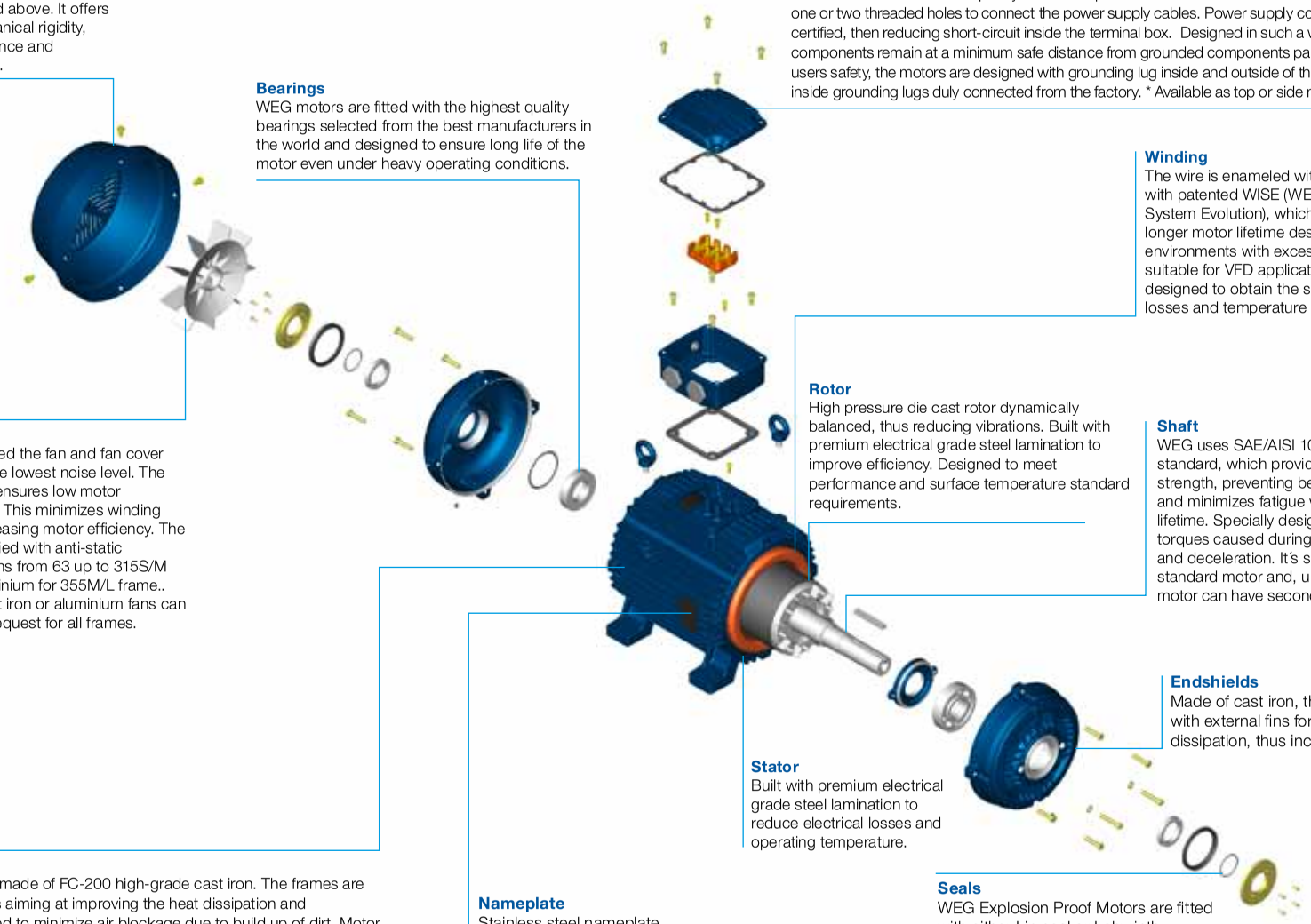

Winding
The wire is enameled with class H. Supplied with patented WISE (WEG Insulation System Evolution), which allows three times longer motor lifetime designed to work in environments with excess of moisture and suitable for VFD application. The winding is designed to obtain the smallest Joule losses and temperature rise.

Rotor
High pressure die cast rotor dynamically balanced, thus reducing vibrations. Built with premium electrical grade steel lamination to improve efficiency. Designed to meet performance and surface temperature standard requirements.

Shaft
WEG uses SAE/AISI 1040/45 steel as standard, which provides high mechanical strength, preventing bending under load and minimizes fatigue which extends lifetime. Specially designed to withstand torques caused during motor acceleration and deceleration. It´s size is larger than the standard motor and, upon special design, motor can have second shaft end.

Fan
WEG has designed the fan and fan cover having in mind the lowest noise level. The efficient cooling ensures low motor temperature rise. This minimizes winding losses, thus increasing motor efficiency. The W21 line is supplied with anti-static polypropylene fans from 63 up to 315S/M frames and aluminium for 355M/L frame.. Alternatively, cast iron or aluminium fans can be supplied on request for all frames.

Endshields
Made of cast iron, they are provided with external fins for better temperature dissipation, thus increasing bearing life.

Stator
Built with premium electrical grade steel lamination to reduce electrical losses and operating temperature.

Frame
WEG motors are made of FC-200 high-grade cast iron. The frames are provided with fins aiming at improving the heat dissipation and adequately spaced to minimize air blockage due to build up of dirt. Motor designed to ensure that surface temperature is lower than ignition temperature of the gas that is present in the environment. Mechanical components are designed towithstand an explosion inside the motor without causing any risk to outside areas since there is no flame flame propagation through flame path. The motors can be mounted in any position, horizontal and vertical, withstanding the maximum axial and radial thrusts.

Nameplate
Stainless steel nameplate ensuring a permanent record of all motor data.

Seals
WEG Explosion Proof Motors are fitted with either Lip seal or Labyrinth Tachonite as standard (see standard features list) to provide the best possible protection.

W3Seal
Exclusive WEG sealing system (tachonite + v´ring + o´ring) guarantee maximum protection against the ingress of solid and liquid contaminating

Cast Iron Frame Motors For Zone 21 - Premium Efficiency EFF1

Output		IEC Frame	Full load torque C_n (Nm)	Locked rotor current I_l/I_n	Locked rotor torque T_l/T_n	Break-down torque T_b/T_n	Inertia J kgm²	Allowable locked rotor time Hot/Cold (s)	Weight (kg)	Sound dB (A)	Rated speed (rpm)	400 V						Full load current I_n (A)
												% of full load						
												Efficiency η			Power Factor (Cos φ)			
kW	HP											50	75	100	50	75	100	
II Pole - 3000rpm																		
0.12	0.16	63	0.41	5	2.8	3	0.000	25/55	7.7	52	2760	58	64.8	65.5	0.51	0.64	0.74	0.357
0.18	0.25	63	0.64	4.4	2.5	2.5	0.000	30/66	7.7	52	2730	63.5	68.5	69.5	0.62	0.76	0.81	0.462
0.25	0.33	63	0.85	4.5	2.5	2.5	0.000	18/40	8.2	52	2730	64	68.5	71.2	0.58	0.71	0.8	0.634
0.37	0.5	71	1.25	5.5	3	3.2	0.000	23/51	10.9	56	2810	69	73.8	74.5	0.63	0.77	0.85	0.843
0.55	0.75	71	1.89	5.7	2.7	2.7	0.000	16/35	11.6	56	2790	72.5	76.6	76.7	0.68	0.8	0.86	1.2
0.75	1	80	2.51	6.8	3.1	3.1	0.001	20/44	15.2	59	2795	76.5	80.5	80.5	0.73	0.82	0.86	1.56
1.1	1.5	80	3.74	7.8	3.4	3.4	0.001	15/33	16.4	59	2820	81	83	83.6	0.64	0.76	0.84	2.26
1.5	2	90S	4.91	7.3	2.8	2.8	0.002	14/31	20.2	62	2860	83.2	84.9	84.5	0.68	0.8	0.85	3.01
2.2	3	90L	7.35	8.4	3.7	3.5	0.003	9/20	22.5	62	2865	84	86	86.6	0.64	0.76	0.83	4.42
3	4	100L	9.7	8.9	3	3.1	0.007	12/26	32.2	67	2895	84.5	87	88.3	0.73	0.83	0.87	5.64
4	5.5	112M	13.32	8.2	2.7	3.4	0.008	17/37	42.7	64	2900	87	88.4	88.6	0.72	0.83	0.87	7.49
5.5	7.5	132S	17.95	8	2.7	3.2	0.021	19/42	61	67	2935	88.5	90	90.1	0.71	0.81	0.86	10.2
7.5	10	132S	24.01	8	2.5	2.9	0.024	13/29	66	67	2925	88.5	90.6	90.8	0.72	0.82	0.87	13.7
9.2	12.5	132M	29.91	8.5	2.8	3.1	0.028	11/24	74	67	2935	88.5	90.9	91	0.7	0.81	0.87	16.8
11	15	160M	35.72	8.5	2.8	3.3	0.053	14/31	117.9	70	2950	90	91.9	92.3	0.7	0.8	0.85	20.2
15	20	160M	47.7	8.2	2.4	3.3	0.059	12/26	130.5	70	2945	91	92	92.5	0.74	0.82	0.86	27.2
18.5	25	160L	59.63	8.8	2.5	3.2	0.068	10/22	135.2	70	2945	91.9	92.8	93.1	0.73	0.82	0.85	33.7
22	30	180M	71.43	8.6	2.7	3.3	0.119	14/31	193.7	70	2950	92.5	93.5	93.7	0.76	0.84	0.87	39
30	40	200L	94.92	7.4	2.7	2.8	0.206	31/68	248	74	2960	92.8	93.7	94	0.77	0.84	0.87	52.9
37	50	200L	118.65	7.6	2.7	2.7	0.224	25/55	260	74	2960	93.2	94	94.6	0.76	0.84	0.87	64.9
45	60	225S/M	141.9	8.5	2.4	2.9	0.448	18/40	414	82	2970	93.6	94.5	94.7	0.82	0.88	0.9	76.2
55	75	250S/M	177.67	8.9	2.6	3.4	0.502	15/33	460.8	82	2965	94	95	95	0.85	0.89	0.91	91.8
75	100	280S/M	236.1	7.7	2.2	2.9	1.271	51/112	740	83	2975	93.2	94.4	95.6	0.83	0.87	0.89	127
90	125	280S/M	295.12	8.2	2.2	2.8	1.412	42/92	780	83	2975	94.1	95.5	95.8	0.82	0.88	0.9	151
110	150	315S/M	354.15	8	2.3	2.8	1.506	38/84	830	83	2975	94.4	95.3	95.8	0.82	0.87	0.89	186
132	175	315S/M	413.17	7.8	2.2	2.7	1.742	32/70	900	83	2975	94.3	95.5	96	0.82	0.88	0.89	223
160	220	315S/M	520.29	7.8	2.2	2.5	2.118	33/73	1010	83	2970	95	96	96.2	0.85	0.89	0.9	267
200	270	355M/L	635.33	7.2	1.8	2.6	4.826	70/154	1490	81	2985	93.5	95	95.4	0.89	0.91	0.92	329
250	340	355M/L	800.05	7.8	1.7	2.5	5.746	65/143	1750	81	2985	95.5	96.3	96.4	0.87	0.91	0.92	407
HIGH OUTPUT DESIGN																		
75	100	250S/M	236.9	8.5	3	3.4	0.556	10/22	490	82	2965	93	94.3	94.6	0.83	0.88	0.9	127
110	150	280S/M	354.15	8	2.3	2.8	1.506	38/84	830	83	2975	94.4	95.3	95.8	0.82	0.87	0.89	186
IV POLE - 1500 rpm																		
0.12	0.16	63	0.79	4.5	2.6	2.7	0.00045	20/44	8.1	44	1415	56.5	62.5	64.5	0.43	0.55	0.65	0.413
0.18	0.25	63	1.25	4.6	2.6	2.7	0.00056	27/59	8.7	44	1400	58	64	67.5	0.44	0.55	0.66	0.583
0.25	0.33	71	1.66	5	3	3.1	0.00079	48/106	11.9	43	1400	69	73	75	0.5	0.61	0.69	0.697
0.37	0.5	71	2.52	5	2.7	2.8	0.00079	37/81	12	43	1395	69	74	75.5	0.47	0.59	0.69	1.03
0.55	0.75	80	3.68	6	2.6	2.8	0.00242	17/37	15	44	1430	72	77	78	0.56	0.69	0.78	1.3
0.75	1	80	4.95	6	2.6	2.6	0.00328	16/35	16.9	44	1420	76	78.6	80.1	0.62	0.75	0.82	1.65
1.1	1.5	90S	7.29	7	2.6	3	0.0056	14/31	22.2	49	1445	80	83.8	83.8	0.59	0.72	0.8	2.37
1.5	2	90L	9.69	7.5	2.8	3.3	0.00672	12/26	24.6	49	1450	80.5	84.6	85.2	0.54	0.68	0.77	3.3
2.2	3	100L	14.79	7.4	3	3	0.01072	17/37	34.2	53	1425	85.3	86.4	86.4	0.65	0.77	0.83	4.43
3	4	100L	19.65	7.8	2.9	3.3	0.01225	12/26	40.2	53	1430	84.5	86.5	87.5	0.64	0.76	0.83	5.96
4	5.5	112M	26.73	6.6	2.1	2.6	0.01875	12/26	46.4	56	1445	87.1	88.3	88.6	0.66	0.77	0.83	7.85
5.5	7.5	132S	35.96	8.5	2.4	3.1	0.05427	12/26	66.9	56	1465	88	89.6	90.1	0.69	0.79	0.85	10.4
7.5	10	132M	47.95	8.2	2.5	3	0.0659	9/20	77.1	56	1465	89	90	90.4	0.71	0.81	0.86	13.9
9.2	12.5	160M	60.14	5.6	2.3	2.3	0.08029	27/59	110	67	1460	89.6	91	91	0.7	0.8	0.84	17.4
11	15	160M	71.92	6	2.5	2.6	0.10037	19/42	120.5	67	1465	90.3	91.4	91.2	0.68	0.78	0.83	21
15	20	160L	95.89	6.1	2.5	2.6	0.11542	17/37	139.7	67	1465	90.5	91.9	91.8	0.66	0.77	0.83	28.4
18.5	25	180M	119.46	8	2.9	2.9	0.19733	12/26	184.9	64	1470	91.6	93	93.4	0.65	0.76	0.82	34.9
22	30	180L	142.86	7.9	2.8	2.9	0.23321	16/35	199.6	64	1475	92.5	93.5	93.7	0.71	0.81	0.86	39.4
30	40	200L	190.48	7	2.5	2.6	0.33095	18/40	245	69	1475	93	94	93.9	0.67	0.78	0.83	55.6
37	50	225S/M	237.3	7.2	2.2	2.7	0.69987	16/35	369.2	70	1480	93	94	94.1	0.76	0.84	0.87	65.2
45	60	225S/M	284.76	7.4	2.4	3	0.83984	15/33	398.2	70	1480	94	94.5	94.5	0.76	0.83	0.88	78.1
55	75	250S/M	357.15	7.2	2.5	2.8	1.15478	17/37	489.8	70	1475	94.1	94.7	94.6	0.77	0.86	0.89	94.3
75	100	280S/M	472.99	7.2	2.2	2.6	2.16799	38/84	660	70	1485	93.9	95.1	95.2	0.79	0.85	0.88	129
90	125	280S/M	591.24	7.8	2.4	2.6	2.81036	25/55	795	70	1485	94.3	95.1	95.3	0.79	0.85	0.88	155
110	150	315S/M	709.49	7.6	2.4	2.6	3.21184	29/64	860	72	1485	94.5	95.2	95.6	0.8	0.86	0.88	189
132	175	315S/M	827.74	7.8	2.4	2.6	3.77391	25/55	995	72	1485	94.8	95.4	95.7	0.78	0.85	0.88	226
160	220	315S/M	1040.59	7.6	2.4	2.6	3.77391	20/44	1005	72	1485	94.7	95.7	95.9	0.76	0.84	0.87	277
200	270	355M/L	1272.8	6.6	2.1	2.3	6.85703	49/108	1525	79	1490	95.3	95.8	96	0.8	0.86	0.88	342
250	340	355M/L	1602.78	6.9	2.2	2.5	8.12016	36/79	1615	79	1490	95.3	96.3	96.5	0.8	0.86	0.88	425

Notes:
**Class "F" insulation with ΔT105K*
Standard voltage, connection and frequency: 220-240V Δ 50Hz *380-415V Δ 50Hz*
380-415V Y 50Hz *660-690V Y 50Hz*
The values shown are subject to change without prior notice. To obtain guaranteed values please access our website.

Cast Iron Frame Motors For Zone 21 - Premium Efficiency EFF1

Output		380 V								415 V							
		Rated speed (rpm)	% of full load						Full load current I_n (A)	Rated speed (rpm)	% of full load						Full load current I_n (A)
			Efficiency η			Power Factor (Cos φ)					Efficiency η			Power Factor (Cos φ)			
kW	HP		50	75	100	50	75	100			50	75	100	50	75	100	
II Pole - 3000 rpm																	
0.12	0.16	2730	60	66	67	0.56	0.69	0.79	0.344	2790	55	63	63	0.48	0.61	0.71	0.373
0.18	0.25	2700	65	69	69	0.66	0.79	0.83	0.478	2760	62	68	70	0.58	0.73	0.78	0.459
0.25	0.33	2700	65.5	69.5	70	0.62	0.75	0.83	0.654	2755	62.5	67.5	71.9	0.55	0.68	0.77	0.628
0.37	0.5	2790	70.5	73.8	74.3	0.68	0.8	0.88	0.86	2825	67.5	73.8	74.5	0.6	0.74	0.82	0.843
0.55	0.75	2760	73.5	76.7	76.5	0.73	0.82	0.88	1.24	2810	71.5	76.5	76.7	0.64	0.77	0.84	1.19
0.75	1	2770	77	80.5	79.8	0.76	0.85	0.88	1.62	2805	76	80.5	80.5	0.7	0.79	0.84	1.54
1.1	1.5	2800	82	83.2	82.8	0.69	0.8	0.86	2.35	2835	80	82.5	83.5	0.58	0.72	0.81	2.26
1.5	2	2845	83.6	84.8	84.3	0.73	0.83	0.87	3.11	2870	82.8	84.8	84.6	0.64	0.77	0.83	2.97
2.2	3	2855	84.5	86	86	0.69	0.8	0.86	4.52	2875	83.5	86	86.6	0.58	0.72	0.8	4.42
3	4	2890	85	86.7	87.5	0.77	0.85	0.88	5.92	2900	84	86.7	88	0.69	0.81	0.86	5.51
4	5.5	2890	87.5	88.3	88.3	0.77	0.85	0.89	7.73	2910	86.5	88.3	88.5	0.68	0.81	0.86	7.31
5.5	7.5	2930	89	90.3	90.2	0.75	0.83	0.87	10.6	2940	88	89.8	90	0.68	0.78	0.84	10.1
7.5	10	2920	89	90.5	90.6	0.75	0.84	0.88	14.3	2930	88	90.6	90.9	0.7	0.8	0.86	13.3
9.2	12.5	2930	89	91	91	0.76	0.85	0.89	17.3	2940	88	90.8	91	0.66	0.77	0.85	16.5
11	15	2945	90.5	92	92.2	0.74	0.83	0.87	20.8	2955	89.5	91.8	92.2	0.66	0.77	0.83	20
15	20	2940	91.5	92	92.4	0.78	0.85	0.87	28.4	2950	90.5	91.9	92.4	0.7	0.8	0.85	26.6
18.5	25	2940	92.1	92.8	93	0.76	0.84	0.87	34.7	2950	91.7	92.7	93	0.7	0.8	0.83	33.3
22	30	2945	92.8	93.5	93.5	0.79	0.86	0.89	40.2	2955	92.2	93.5	93.7	0.73	0.82	0.85	38.4
30	40	2955	93	93.7	93.8	0.81	0.86	0.88	55.2	2965	92.6	93.7	94.1	0.74	0.82	0.86	51.6
37	50	2955	93.4	94	94.4	0.8	0.86	0.88	67.7	2965	93	94	94.6	0.72	0.82	0.86	63.3
45	60	2965	93.9	94.5	94.5	0.84	0.89	0.91	79.5	2970	93.3	94.5	94.6	0.8	0.87	0.89	74.4
55	75	2960	94.2	94.7	94.7	0.87	0.9	0.92	95.9	2970	93.8	95	95	0.83	0.88	0.9	89.5
75	100	2970	93.4	94.4	95.4	0.85	0.88	0.9	133	2975	93	94.4	95.5	0.81	0.86	0.88	124
90	125	2975	94.3	95.5	95.8	0.84	0.89	0.9	159	2980	93.9	95.5	95.8	0.8	0.87	0.89	147
110	150	2970	94.6	95.4	95.7	0.84	0.88	0.9	194	2975	94.2	95.2	95.8	0.8	0.86	0.88	182
132	175	2970	94.5	95.5	96	0.84	0.89	0.9	232	2975	94.1	95.4	96	0.8	0.87	0.89	215
160	220	2965	95	95.9	96.1	0.86	0.9	0.91	278	2975	94.9	96	96.2	0.83	0.88	0.89	260
200	270	2980	93.7	95	95.3	0.9	0.92	0.92	347	2985	93.3	94.9	95.4	0.88	0.9	0.91	321
250	340	2980	95.5	96.3	96.4	0.89	0.92	0.93	424	2985	95.4	96.3	96.4	0.86	0.91	0.92	392
HIGH OUTPUT DESIGN																	
75	100	2960	93.2	94.3	94.3	0.85	0.89	0.91	133	2965	92.8	94.3	94.6	0.81	0.87	0.9	123
110	150	2970	94.6	95.4	95.7	0.84	0.88	0.9	194	2975	94.2	95.2	95.8	0.8	0.86	0.88	182
IV Pole - 1500 rpm																	
0.12	0.16	1405	59	64	65	0.46	0.59	0.69	0.407	1425	54	60.5	63	0.4	0.51	0.61	0.434
0.18	0.25	1390	60	65	67	0.47	0.57	0.68	0.6	1410	56	63	67	0.41	0.53	0.64	0.584
0.25	0.33	1385	70	73.5	74.5	0.54	0.65	0.73	0.698	1415	68	72.5	75.5	0.46	0.58	0.66	0.698
0.37	0.5	1385	71	74.5	75.5	0.51	0.63	0.72	1.03	1405	67	73.5	75	0.43	0.55	0.66	1.04
0.55	0.75	1420	73	77.5	77.5	0.59	0.72	0.81	1.33	1435	71	76.5	78	0.53	0.65	0.75	1.31
0.75	1	1410	77	78.7	79.6	0.66	0.78	0.85	1.68	1425	75	78.5	80.1	0.58	0.71	0.79	1.65
1.1	1.5	1440	81.5	83.8	83.6	0.64	0.76	0.83	2.41	1450	78.5	83.8	83.8	0.55	0.69	0.77	2.37
1.5	2	1440	81.5	84.7	85	0.59	0.73	0.8	3.35	1455	79.5	84.5	85	0.5	0.64	0.74	3.32
2.2	3	1420	85.5	86.3	86.2	0.7	0.81	0.86	4.51	1430	85	86.4	86.4	0.62	0.75	0.81	4.37
3	4	1425	85	86.5	87.5	0.68	0.8	0.85	6.13	1435	84	86.5	87.5	0.6	0.73	0.81	5.89
4	5.5	1440	87.5	88.4	88.3	0.7	0.8	0.86	8	1450	86.7	88.2	88.6	0.62	0.74	0.81	7.75
5.5	7.5	1460	88.5	89.6	90	0.72	0.81	0.86	10.8	1470	87.5	89.4	90.1	0.65	0.77	0.83	10.2
7.5	10	1460	89.2	89.8	89.8	0.75	0.84	0.88	14.4	1465	88.7	89.8	90.3	0.68	0.79	0.85	13.6
9.2	12.5	1455	90	91	90.7	0.74	0.82	0.85	18.1	1465	89.2	91	91	0.67	0.78	0.83	16.9
11	15	1460	90.6	91.5	91	0.72	0.81	0.85	21.6	1470	90	91.3	91.3	0.64	0.75	0.81	20.7
15	20	1460	90.9	91.9	91.5	0.7	0.8	0.85	29.3	1470	90.1	91.9	91.8	0.62	0.74	0.81	28.1
18.5	25	1465	91.8	93	93.3	0.7	0.8	0.84	35.9	1475	91.3	92.9	93.3	0.6	0.73	0.8	34.5
22	30	1470	92.8	93.4	93.5	0.75	0.83	0.88	40.6	1475	92.2	93.4	93.7	0.68	0.79	0.85	38.4
30	40	1475	93.5	94.1	93.7	0.71	0.81	0.85	57.2	1480	92.5	93.9	93.8	0.63	0.75	0.81	54.9
37	50	1480	93.4	94	94	0.8	0.86	0.88	68	1485	92.6	93.9	94	0.73	0.82	0.86	63.7
45	60	1480	94.2	94.4	94.3	0.79	0.85	0.89	81.5	1485	93.8	94.3	94.5	0.73	0.81	0.87	76.1
55	75	1475	94.2	94.6	94.4	0.8	0.88	0.9	98.4	1480	94	94.7	94.7	0.75	0.85	0.88	91.8
75	100	1475	94	94.7	94.7	0.75	0.84	0.87	138	1485	93.7	95	95.2	0.77	0.84	0.87	126
90	125	1480	94.1	95	95	0.81	0.86	0.88	136	1485	94.1	95	95.3	0.77	0.84	0.87	151
110	150	1485	94.5	95.1	95.2	0.81	0.87	0.89	161	1485	94.3	95.1	95.6	0.78	0.85	0.87	184
132	175	1485	94.5	95.4	95.6	0.8	0.86	0.88	199	1485	94.6	95.3	95.7	0.76	0.84	0.87	221
160	220	1480	95	95.4	95.6	0.8	0.86	0.89	236	1485	94.5	95.7	95.9	0.74	0.82	0.86	270
200	270	1480	94.9	95.7	95.8	0.78	0.86	0.88	288	1490	95	95.8	96	0.78	0.85	0.87	333
250	340	1485	95.3	95.6	95.7	0.83	0.87	0.89	357	1490	95.1	96.1	96.4	0.77	0.85	0.87	415

Cast Iron Frame Motors For Zone 21 - Premium Efficiency EFF1

Output		IEC Frame	Full load torque C_n (Nm)	Locked rotor current I_r/I_n	Locked rotor torque T_r/T_n	Break-down torque T_b/T_n	Inertia J kgm²	Allowable locked rotor time Hot/Cold (s)	Weight (kg)	Sound dB (A)	Rated speed (rpm)	400 V						Full load current I_n (A)
												% of full load						
												Efficiency η			Power Factor (Cos φ)			
kW	HP											50	75	100	50	75	100	
VI Pole - 1000 rpm																		
0.18	0.25	71	1.95	3.5	2.1	2.2	0.00079	49/108	11	43	900	49	57	61	0.42	0.51	0.6	0.71
0.25	0.33	71	2.58	3.5	2.1	2.2	0.00096	43/95	12	43	900	53	63	67	0.39	0.48	0.55	0.979
0.37	0.5	80	3.8	4.7	2.1	2.2	0.00242	14/31	15	43	925	62	67.5	70	0.48	0.61	0.7	1.09
0.55	0.75	80	5.73	4.8	2.2	2.4	0.00311	11/24	16	43	920	62	68.5	70.3	0.48	0.63	0.72	1.57
0.75	1	90S	7.63	4.8	2.1	2.2	0.0056	20/44	22	45	920	74	77.7	77.7	0.5	0.63	0.72	1.94
1.1	1.5	90L	11.45	5	2.3	2.4	0.00672	12/26	23	45	920	72	77.7	77.7	0.48	0.61	0.71	2.88
1.5	2	100L	14.87	5.5	2.2	2.5	0.01289	19/42	32	44	945	79	81.5	81.5	0.49	0.6	0.7	3.8
2.2	3	112M	22.18	6.2	2.4	2.6	0.02243	16/35	45	48	950	81.5	84	83.8	0.52	0.64	0.72	5.26
3	4	132S	29.27	6	2.1	2.5	0.04264	28/62	59	52	960	82	85	86.5	0.53	0.67	0.74	6.76
4	5.5	132M	40.24	6.5	2.2	2.5	0.05039	21/46	68	52	960	85	86.6	87.2	0.56	0.69	0.76	8.71
5.5	7.5	132M	54.59	6.8	2.3	2.5	0.0659	17/37	79	52	965	84.5	87.5	87.6	0.53	0.65	0.73	12.4
7.5	10	160M	72.41	6.6	2.5	2.9	0.14364	19/42	106	56	970	87.5	89.5	90	0.61	0.74	0.81	14.8
9.2	12.5	160L	90.51	6.2	2.2	2.7	0.16518	15/33	130	56	970	89.4	90.1	90.1	0.6	0.73	0.8	18.4
11	15	160L	108.62	7	2.4	2.7	0.17595	13/29	136	56	970	89	90.3	90.3	0.58	0.72	0.79	22.3
15	20	180L	144.82	8	2.7	3	0.28959	9/20	189.6	56	970	91.2	91.9	91.6	0.72	0.81	0.87	27.2
18.5	25	200L	180.1	6.3	2.3	2.5	0.37671	17/37	210	58	975	91.3	92.7	92.9	0.67	0.78	0.82	35.1
22	30	200L	216.12	6.2	2.3	2.6	0.44846	15/33	240	58	975	91.2	92.6	92.9	0.65	0.75	0.82	41.7
30	40	225S/M	285.24	7	2.6	2.6	0.98842	21/46	366	61	985	91.7	93	93.5	0.73	0.81	0.85	54.5
37	50	250S/M	358.37	7	2.5	2.6	1.3179	20/44	450	61	980	91.8	94	94	0.72	0.81	0.84	67.6
45	60	280S/M	427.86	6.8	2.2	2.7	2.29824	27/59	610	66	985	92	93.6	94.2	0.67	0.77	0.82	84.1
55	75	280S/M	534.82	6.7	2.1	2.6	2.64298	21/46	655	66	985	92.5	93.9	94.3	0.67	0.78	0.82	103
75	100	315S/M	713.09	6.7	2.1	2.4	3.44737	20/44	725	69	985	93.7	94.4	94.5	0.72	0.81	0.84	136
90	125	315S/M	891.37	6.5	2.2	2.4	4.02193	16/35	810	69	985	94	94.8	94.8	0.71	0.8	0.83	165
110	150	315S/M	1069.64	6.5	2.2	2.4	5.28596	18/40	980	69	985	94.5	95.1	95.1	0.69	0.79	0.84	199
132	175	355M/L	1241.61	6.1	1.9	2.2	9.05472	90/198	1400	73	990	94.3	95.5	95.8	0.67	0.77	0.81	246
160	220	355M/L	1560.88	6	1.9	2.1	9.53128	76/167	1460	73	990	94.2	95.8	96	0.65	0.77	0.81	297
200	270	355M/L	1915.63	6.1	2.2	2.3	12.39067	85/187	1700	73	990	94.7	95.5	95.7	0.66	0.76	0.81	372
250	340	355M/L	2412.27	6.1	1.9	2.1	14.77349	64/141	1890	73	990	95	96	96.2	0.69	0.78	0.81	463
HIGH OUTPUT DESIGN																		
75	100	280S/M	713.09	6.7	2.1	2.4	3.44737	20/44	725	69	985	93.7	94.4	94.5	0.72	0.81	0.84	136
VIII Pole - 750 rpm																		
0.18	0.25	80	2.51	3.1	1.8	2	0.00242	16/35	13.7	42	700	42	51	55.8	0.42	0.52	0.61	0.763
0.25	0.33	80	3.34	3.5	2	2	0.00294	15/33	14.8	42	695	51	60	64.3	0.41	0.52	0.61	0.92
0.37	0.5	90S	5.09	4	2	2	0.00448	21/46	18	43	690	53.5	61.3	64.5	0.39	0.5	0.59	1.4
0.55	0.75	90L	7.63	4	2	2.2	0.00616	21/46	21.5	43	690	59	64	66.3	0.39	0.5	0.6	2
0.75	1	100L	9.89	4.2	1.9	2.2	0.01121	38/84	30.2	50	710	71	74.2	76	0.4	0.53	0.61	2.34
1.1	1.5	100L	15.05	4.2	1.8	2.2	0.01289	31/68	30	50	700	71	74.5	77	0.4	0.52	0.62	3.33
1.5	2	112M	19.79	5.4	2.4	2.7	0.0243	32/70	45	46	710	79	81.3	82	0.43	0.55	0.66	4
2.2	3	132S	29.68	6.2	2.4	2.5	0.07527	25/55	70	48	710	82	84.3	84.2	0.54	0.66	0.73	5.17
3	4	132M	39.57	6	2.4	2.4	0.08531	21/46	72.5	48	710	82.8	84.6	84.5	0.54	0.67	0.75	6.83
4	5.5	160M	53.29	5.2	2.2	2.8	0.12209	27/59	110	51	725	83	85.8	86.6	0.44	0.57	0.66	10.1
5.5	7.5	160M	72.16	5.6	2.5	2.8	0.16518	22/48	130	51	730	83.5	86.4	87	0.42	0.55	0.65	14
7.5	10	160L	96.88	5.2	2	2.4	0.16518	19/42	145	51	725	85.5	88	88.5	0.52	0.64	0.71	17.2
9.2	12.5	180M	121.1	7	2.2	2.7	0.262	12/26	163	51	725	87.5	88.3	88.5	0.67	0.77	0.83	18.1
11	15	180L	145.32	7	2.2	2.4	0.26201	9/20	183	51	725	88	89	89	0.68	0.78	0.83	21.5
15	20	200L	192.44	5	2	2.2	0.50227	28/62	300	53	730	89.5	90.8	91.5	0.53	0.65	0.71	33.3
18.5	25	225S/M	240.55	7.2	2.1	2.6	0.84722	18/40	340	56	730	90.5	91.5	91.9	0.69	0.79	0.83	35
22	30	225S/M	288.66	7.5	2.2	3	0.98842	18/40	365	56	730	90.8	92.2	92.5	0.67	0.77	0.82	41.9
30	40	250S/M	384.87	7.5	2.1	2.8	1.22377	17/37	440	56	730	91.7	92.5	93	0.69	0.79	0.83	56.1
37	50	280S/M	474.59	6.5	1.9	2.2	2.64298	32/70	590	59	740	92.6	93.5	93.9	0.63	0.74	0.8	71.1
45	60	280S/M	569.51	6.5	2	2.4	3.10263	32/70	650	59	740	92.9	93.7	94	0.62	0.73	0.79	87.5
55	75	315S/M	711.89	6.5	2	2.2	3.44737	32/70	730	62	740	93.5	94.5	94.5	0.63	0.74	0.8	105
75	100	315S/M	949.18	6.6	1.9	2.2	4.36666	20/44	876	62	740	93.9	94.7	94.9	0.66	0.78	0.81	141
90	125	315S/M	1186.48	6.8	1.9	2.4	5.28596	23/51	970	62	740	93.9	94.7	95	0.67	0.77	0.81	169
110	150	355M/L	1423.78	6.4	1.5	2.2	12.56043	41/90	1430	70	740	93.5	95.2	95.2	0.62	0.73	0.79	211
132	175	355M/L	1661.07	6.5	1.6	2.2	13.18845	47/103	1445	70	740	94	95.4	95.4	0.63	0.73	0.79	253
160	220	355M/L	2088.2	6.6	1.6	2.2	16.32856	42/92	1620	70	740	94.3	95.7	95.7	0.62	0.74	0.79	305
200	270	355M/L	2562.8	6.8	1.6	2.1	19.46866	37/81	1830	70	740	94.2	95.1	95.5	0.58	0.71	0.78	388

Notes:
**Class "F" insulation with ΔT105K*
Standard voltage, connection and frequency: 220-240V Δ 50Hz *380-415V Δ 50Hz*
380-415V Y 50Hz *660-690V Y 50Hz*
The values shown are subject to change without prior notice. To obtain guaranteed values please access our website.

Cast Iron Frame Motors For Zone 21 - Premium Efficiency EFF1

Output		380 V								415 V							
		Rated speed (rpm)	% of full load						Full load current I_n (A)	Rated speed (rpm)	% of full load						Full load current I_n (A)
			Efficiency η			Power Factor (Cos φ)					Efficiency η			Power Factor (Cos φ)			
kW	HP		50	75	100	50	75	100			50	75	100	50	75	100	
VI Pole - 1000 rpm																	
0.18	0.25	890	51	58	61	0.46	0.55	0.63	0.712	910	47	56	61	0.39	0.47	0.57	0.72
0.25	0.33	890	55	64	67	0.4	0.53	0.59	0.961	910	51	62	67	0.37	0.44	0.53	0.979
0.37	0.5	920	64	68.5	70.5	0.52	0.65	0.74	1.08	930	60	66.5	69.5	0.44	0.57	0.66	1.12
0.55	0.75	910	64	69.5	70.5	0.53	0.67	0.76	1.56	930	60	67.5	70	0.44	0.59	0.66	1.66
0.75	1	910	75	77.5	76.8	0.55	0.67	0.74	2.01	930	73	77.7	77.7	0.46	0.6	0.7	1.92
1.1	1.5	910	73	77.5	76.8	0.53	0.65	0.74	2.94	930	71	77.7	77.7	0.44	0.57	0.67	2.94
1.5	2	940	80	81.5	81.5	0.53	0.64	0.72	3.88	950	78	81.5	81.5	0.45	0.57	0.68	3.77
2.2	3	945	82.5	83.5	83.4	0.55	0.67	0.74	5.42	955	80.5	84	84	0.48	0.61	0.7	5.21
3	4	955	83	85.2	86	0.57	0.69	0.76	6.97	965	81	84.8	86.5	0.5	0.64	0.72	6.7
4	5.5	955	85.7	86.8	87	0.6	0.72	0.78	8.96	965	84.3	86.4	87.2	0.52	0.66	0.74	8.62
5.5	7.5	960	85.5	87.6	87.6	0.58	0.7	0.76	12.6	965	83.5	87.4	87.6	0.48	0.61	0.7	12.5
7.5	10	965	88	89.7	89.9	0.65	0.77	0.82	15.5	975	87	89.3	90	0.58	0.71	0.79	14.7
9.2	12.5	970	90	90.3	90	0.64	0.75	0.81	19.2	975	88.7	89.9	90	0.55	0.71	0.79	18
11	15	970	89.5	90.5	90.2	0.62	0.76	0.81	22.9	975	88.5	90	90.3	0.54	0.68	0.76	22.3
15	20	970	91.4	91.8	91.4	0.75	0.83	0.89	28	975	91	91.8	91.6	0.7	0.8	0.85	26.8
18.5	25	970	91.8	92.6	92.7	0.72	0.81	0.84	36.1	980	90.8	92.6	92.9	0.64	0.75	0.8	34.6
22	30	970	92	92.9	92.9	0.7	0.78	0.84	42.8	980	90.4	92.2	92.9	0.6	0.72	0.8	41.2
30	40	980	92	93	93.4	0.76	0.84	0.86	56.7	985	91.4	93	93.5	0.7	0.79	0.84	53.1
37	50	980	92	94	93.9	0.75	0.83	0.86	69.6	985	91.6	94	94	0.69	0.79	0.82	66.8
45	60	980	92	93.5	93.5	0.76	0.84	0.87	84	985	91.5	93.5	94.1	0.64	0.75	0.8	83.2
55	75	985	92.5	93.7	94.1	0.71	0.79	0.84	86.5	985	92.2	93.9	94.2	0.64	0.75	0.81	100
75	100	985	94	94.4	94.4	0.75	0.83	0.85	142	985	93.4	94.4	94.5	0.69	0.79	0.83	133
90	125	985	94	94.4	94.4	0.75	0.83	0.85	142	985	93.7	94.8	94.8	0.68	0.78	0.82	161
110	150	985	94.3	94.8	94.7	0.74	0.82	0.84	172	985	94.3	95.1	95.2	0.66	0.77	0.83	194
132	175	985	94.7	95	95	0.73	0.81	0.85	207	990	94.1	95.5	95.8	0.64	0.75	0.8	240
160	220	990	94.5	95.5	95.7	0.72	0.79	0.82	256	990	93.9	95.8	96	0.6	0.74	0.8	290
200	270	990	94.4	95.5	95.7	0.7	0.79	0.82	358	990	94.4	95.4	95.7	0.62	0.73	0.79	368
250	340	990	95	95.6	95.7	0.7	0.79	0.82	387	990	94.7	95.9	96.2	0.66	0.76	0.8	452
HIGH OUTPUT DESIGN																	
75	100	985	92.8	93.9	94.2	0.71	0.8	0.83	107	985	93.4	94.4	94.5	0.69	0.79	0.83	133
VIII Pole - 750 rpm																	
0.18	0.25	685	38	46.2	49	0.38	0.47	0.55	0.677	705	40	49	55.5	0.4	0.49	0.58	0.778
0.25	0.33	690	44	53	56	0.44	0.55	0.64	0.763	700	49	59	63.8	0.4	0.5	0.59	0.924
0.37	0.5	685	53	61	63.8	0.43	0.55	0.63	0.945	695	52	60	64	0.37	0.47	0.56	1.44
0.55	0.75	680	55	62.5	65	0.42	0.54	0.64	1.35	700	57	63	66	0.37	0.47	0.57	2.03
0.75	1	680	61	65	66.5	0.42	0.54	0.64	1.96	715	70	74	76	0.38	0.5	0.58	2.37
1.1	1.5	700	72	74.4	75.5	0.44	0.56	0.64	2.36	710	69.5	73.5	76.9	0.37	0.49	0.59	3.37
1.5	2	690	72.5	75.5	76.9	0.44	0.57	0.65	3.34	715	78.2	81	81.8	0.4	0.51	0.63	4.05
2.2	3	700	79.8	81.6	82	0.47	0.59	0.69	4.03	715	81	84.3	84.3	0.5	0.63	0.71	5.11
3	4	705	83	84.3	84.2	0.58	0.7	0.75	5.29	715	82.5	84.6	84.6	0.51	0.64	0.73	6.76
4	5.5	705	83.2	84.6	84.5	0.58	0.71	0.77	7.01	730	82	85.4	86.6	0.41	0.53	0.63	10.2
5.5	7.5	725	84	86.2	86.6	0.48	0.61	0.7	10	730	83	86.1	87	0.4	0.52	0.62	14.2
7.5	10	725	84	86.7	87	0.46	0.6	0.69	13.9	725	84.5	87.8	88.5	0.48	0.6	0.69	17.1
9.2	12.5	720	86.5	88.2	88.5	0.56	0.68	0.74	17.4	730	87.2	88.3	88.6	0.63	0.75	0.81	17.8
11	15	725	87.8	88.3	88	0.71	0.81	0.85	18.7	730	87.8	89	89	0.65	0.75	0.81	21.2
15	20	725	88.2	89	88.8	0.73	0.81	0.85	22.1	735	89	90.6	91.3	0.5	0.63	0.69	33.1
18.5	25	730	90	91	91.2	0.56	0.67	0.73	34.2	730	90.2	91.5	91.9	0.65	0.77	0.82	34.2
22	30	725	90.8	91.5	91.5	0.73	0.81	0.84	36.6	735	90.5	92.1	92.5	0.63	0.74	0.81	40.8
30	40	730	91.1	92.2	92.2	0.71	0.8	0.83	43.7	730	91.3	92.5	93	0.65	0.77	0.82	54.7
37	50	725	92	92.5	92.6	0.73	0.81	0.84	58.6	740	92.1	93.4	93.8	0.6	0.72	0.79	69.5
45	60	735	92.9	93.5	93.8	0.68	0.76	0.81	74	740	92.5	93.5	94.1	0.58	0.7	0.77	86.4
55	75	735	93.3	93.9	94	0.66	0.77	0.81	89.8	740	93.1	94.5	94.6	0.61	0.73	0.79	102
75	100	740	93.5	94.5	94.5	0.65	0.75	0.8	111	740	93.7	94.7	94.9	0.63	0.76	0.8	137
90	125	735	93.8	94.5	94.4	0.69	0.78	0.81	109	740	93.6	94.6	95.1	0.63	0.75	0.8	165
110	150	735	94.1	94.7	94.8	0.69	0.8	0.82	147	745	93	95.2	95.2	0.59	0.77	0.77	209
132	175	735	94.2	94.8	95	0.71	0.79	0.83	173	745	93.5	95.4	95.4	0.6	0.71	0.77	250
160	220	740	94	95.2	95.1	0.65	0.76	0.81	217	745	93.8	95.7	95.7	0.58	0.71	0.78	298
200	270	740	94	95.4	95.4	0.63	0.73	0.79	266	745	94	95	95.5	0.54	0.68	0.76	383

Cast Iron Frame Motors For Zone 21 Top Premium Efficiency Exceeds EFF1

Standard Features:

- Three-phase, multivoltage, IP66, TEFC
- Output: 4 up to 315kW
- Frames: 112 up to 315M/L
- Voltage: 220-240/380-415V (up to 100L)
  380-415/660V (from 112M and up)
- Class “F” insulation (ΔT=80K)
- Continuous duty: S1
- Design N
- Ambient temperature: 40°C, at 1000 m.a.s.l.
- Squirrel cage rotor/Aluminium die cast
- Oil Seal (frames 63 up to 80)
- W3Seal (frames 90S up to 355M/L)
- Anti-condensation drain holes
- Temperature Classification: Zone 21-maximum guaranteed external surface temperature T125ºC temperature limitation because of the presence of dust clouds (for material with ignition temperature above 125ºC) and presence of dust layers (up to 5mm)
- Regreasing nipples from frame 225S/M and above
- Metric thread cable entries in terminal box
- Thermistors (1 per phase) 140°C
- Suitable for Inverter Duty applications
- Color: RAL 6021

Options Available:

- Degree of Protection: IP65
- Bearing seals:
  - Oil seal (frames 90S up to 355M/L)
- Thermal protection:
  - Thermostats
  - RTD-PT 100
- Space heaters
- Design H
- Class “H” insulation
- Roller bearings for frame 160M and above

More options available, on request

Typical Applications:

These motors are designed to operate in areas that can release flammable dust or in atmospheres where explosions can occur due to a mixture of air and dust:

- Sugar refining plants
- Breweries
- Cement plants
- Textiles, pharmaceutical, chemical and agricultural process industries
- Other several duty applications

Fan Cover
Made of steel plate for frames 112 up to 132M and of cast iron for frames 160M and above. It offers a superior mechanical rigidity, corrosion-resistance and extended lifetime.

Bearings
WEG motors are fitted with the highest quality bearings selected from the best manufacturers in the world and designed to ensure long life of the motor even under heavy operating conditions.

Terminal Box
Made of cast iron made with plenty of internal space. The terminal box can be rotated in 90º intervals, having one or two threaded holes to connect the power supply cables. Power supply connection components are certified, then reducing short-circuit inside the terminal box. Designed in such a way that the energized components remain at a minimum safe distance from grounded components parts. In order to allow end users safety, the motors are designed with grounding lug inside and outside of the terminal box, with the inside grounding lugs duly connected from the factory. * Available as top or side mounted.

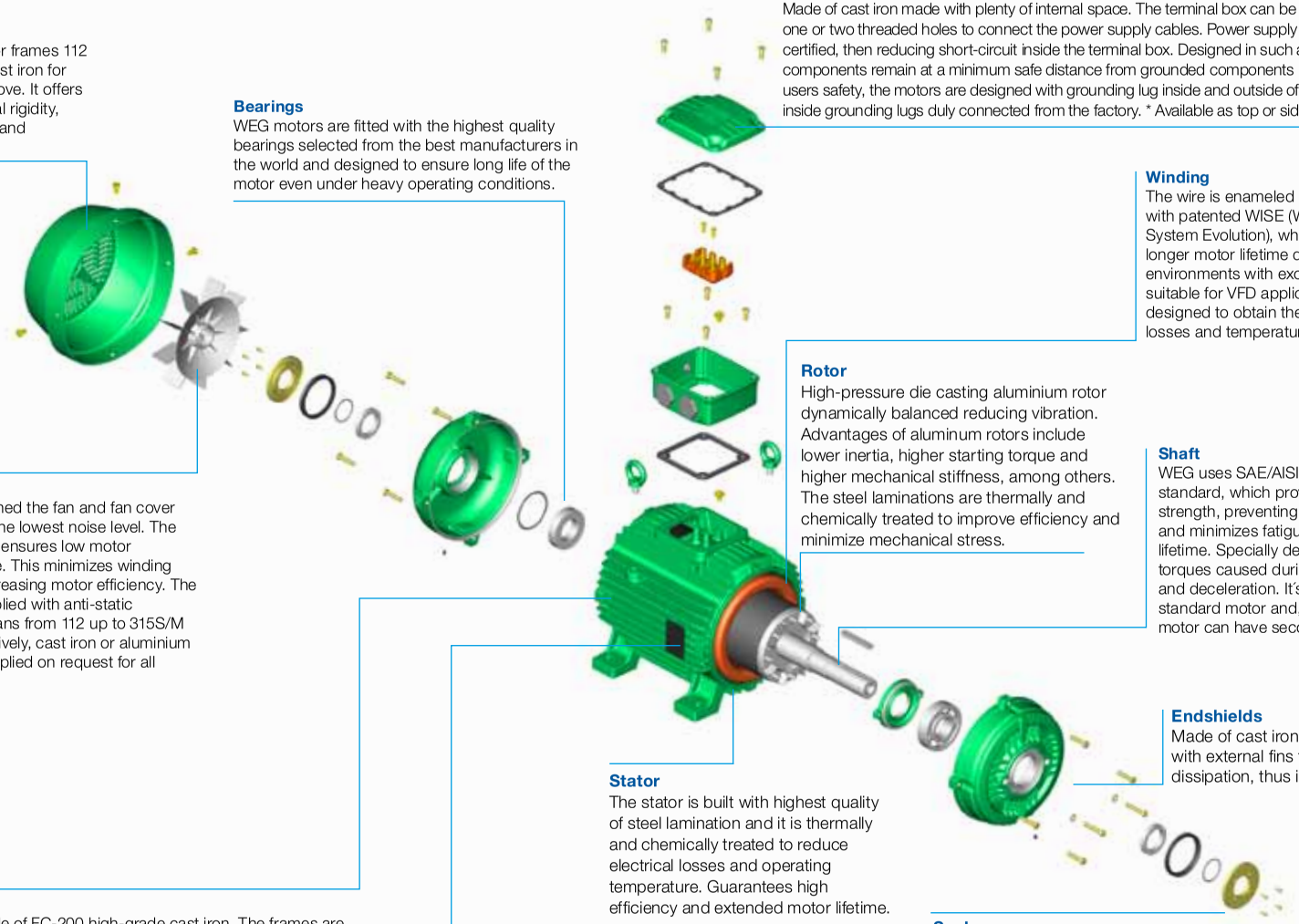

Winding
The wire is enameled with class H. Supplied with patented WISE (WEG Insulation System Evolution), which allows three times longer motor lifetime designed to work in environments with excess of moisture and suitable for VFD application. The winding is designed to obtain the smallest Joule losses and temperature rise.

Rotor
High-pressure die casting aluminium rotor dynamically balanced reducing vibration. Advantages of aluminum rotors include lower inertia, higher starting torque and higher mechanical stiffness, among others. The steel laminations are thermally and chemically treated to improve efficiency and minimize mechanical stress.

Shaft
WEG uses SAE/AISI 1040/45 steel as standard, which provides high mechanical strength, preventing bending under load and minimizes fatigue which extends lifetime. Specially designed to withstand torques caused during motor acceleration and deceleration. It´s size is larger than the standard motor and, upon special design, motor can have second shaft end.

Fan
WEG has designed the fan and fan cover having in mind the lowest noise level. The efficient cooling ensures low motor temperature rise. This minimizes winding losses, thus increasing motor efficiency. The W21 line is supplied with anti-static polypropylene fans from 112 up to 315S/M frames. Alternatively, cast iron or aluminium fans can be supplied on request for all frames.

Endshields
Made of cast iron, they are provided with external fins for better temperature dissipation, thus increasing bearing life.

Stator
The stator is built with highest quality of steel lamination and it is thermally and chemically treated to reduce electrical losses and operating temperature. Guarantees high efficiency and extended motor lifetime.

Frame
WEG motors are made of FC-200 high-grade cast iron. The frames are provided with fins aiming at improving the heat dissipation and adequately spaced to minimize air blockage due to build up of dirt. Motor designed to ensure that surface temperature is lower than ignition temperature of the gas that is present in the environment. Mechanical components are designed towithstand an explosion inside the motor without causing any risk to outside areas since there is no flame flame propagation through flame path. The motors can be mounted in any position, horizontal and vertical, withstanding the maximum axial and radial thrusts.

Nameplate
Stainless steel nameplate ensuring a permanent record of all motor data.

Seals
WEG Explosion Proof Motors are fitted with either Lip seal or Labyrinth Tachonite as standard (see standard features list) to provide the best possible protection.

W3Seal
Exclusive WEG sealing system (tachonite + v́ring + o´ring) guarantee maximum protection against the ingress of solid and liquid contaminating

Cast Iron Frame Motors For Zone 21
Top Premium Efficiency Exceeds EFF1

Output		IEC Frame	Full load torque C_n (Nm)	Locked rotor current I_l/I_n	Locked rotor torque T_l/T_n	Break-down torque T_b/T_n	Inertia J kgm²	Allowable locked rotor time Hot/Cold (s)	Weight (kg)	Sound dB (A)	Rated speed (rpm)	400 V						Full load current I_n (A)
												% of full load						
												Efficiency η			Power Factor (Cos φ)			
kW	HP											50	75	100	50	75	100	
II Pole - 3000 rpm																		
4	5.5	112M	8.5	13.32	2.6	3.1	0.00842	21/46	46	64	2900	88.7	89.8	89.8	0.61	0.79	0.85	7.56
5.5	7.5	132S	8.5	17.92	2.5	3	0.02056	19/42	62	67	2940	90.1	91.2	91.3	0.7	0.8	0.85	10.2
7.5	10	132S	8.5	23.89	2.7	3.1	0.02804	8/18	75	67	2940	89	91.3	91.6	0.72	0.83	0.87	13.6
9.2	12.5	132M	8.5	29.97	2.4	2.9	0.0243	8/18	60	67	2930	91.1	92.1	92.3	0.65	0.78	0.85	16.9
11	15	160M	8.6	35.72	2.3	3	0.05295	12/26	110	70	2950	91.7	93	93	0.65	0.78	0.83	20.6
15	20	160M	8.3	47.7	2.4	2.9	0.05883	11/24	115	70	2945	92.2	93.3	93.3	0.71	0.81	0.84	27.6
18.5	25	160L	9	59.63	2.3	2.7	0.06766	11/24	136	70	2945	92.9	93.8	93.8	0.67	0.79	0.85	33.5
22	30	180M	8.6	71.31	2.8	2.7	0.15082	9/20	180	70	2955	93.2	94.3	94.1	0.75	0.83	0.87	38.8
30	40	200L	7.6	95.08	2.7	2.4	0.2063	35/77	245	74	2955	92.6	93.9	94.2	0.75	0.83	0.86	53.5
37	50	200L	8.4	118.65	2.6	2.6	0.22424	16/35	260	74	2960	93.3	94.2	94.7	0.76	0.84	0.87	64.8
45	60	225S/M	8.5	142.14	2.4	2.9	0.52021	20/44	410	82	2965	94.5	95.4	95.4	0.82	0.88	0.9	75.6
55	75	250S/M	8.5	177.97	2.3	3	0.55609	18/40	470	82	2960	94.7	95.5	95.3	0.85	0.89	0.91	91.5
75	100	280S/M	7	236.1	1.6	2.6	1.27083	36/79	700	83	2975	95.2	96.1	96	0.83	0.88	0.89	127
90	125	280S/M	8	295.12	2.2	2.8	1.41204	42/92	780	83	2975	94.3	95.6	96	0.82	0.88	0.9	150
110	150	315S/M	8	354.15	1.8	2.6	1.50617	25/55	830	83	2975	95.2	96.4	96.4	0.76	0.84	0.88	187
132	175	315S/M	7.8	413.17	1.9	2.6	1.74151	30/66	900	83	2975	95.5	96.6	96.6	0.79	0.87	0.89	222
160	220	315S/M	8.2	519.42	1.9	2.6	2.11806	30/66	990	83	2975	95.5	96.6	96.6	0.79	0.86	0.89	269
IV Pole - 1500 rpm																		
4	5.5	112M	26.73	6.6	2	2.6	0.01875	8/18	49	56	1445	87.4	89.9	89.9	0.66	0.77	0.83	7.73
5.5	7.5	132S	35.96	8.5	2.4	3.1	0.05427	12/26	65	56	1465	88.5	90.1	90.7	0.69	0.79	0.85	10.3
7.5	10	132M	47.95	8	2.5	3	0.0659	7/15	85	56	1465	89	91.1	91.7	0.71	0.81	0.85	13.9
11	15	160M	71.67	7.5	2.8	3	0.1104	12/26	135	67	1470	91.1	92.3	92.6	0.62	0.73	0.8	21.4
15	20	160L	95.89	6.3	2	2.4	0.13048	11/24	130	67	1465	91.1	92.4	92.9	0.65	0.76	0.82	28.4
18.5	25	180M	119.46	8.3	2.7	2.8	0.17939	12/26	175	64	1470	92.1	93.2	93.6	0.7	0.81	0.85	33.6
22	30	180L	142.86	8.6	2.8	2.9	0.24666	11/24	225	64	1475	92.9	94	94.3	0.68	0.78	0.84	40.1
30	40	200L	189.84	7.3	2.7	2.9	0.38611	19/42	280	69	1480	94	94.7	94.5	0.65	0.76	0.82	55.9
37	50	225S/M	238.1	7.2	2.2	2.7	0.69987	14/31	380	70	1475	93.6	94.7	94.9	0.77	0.85	0.88	63.9
45	60	225S/M	284.76	7.5	2.3	2.8	0.83984	17/37	400	70	1480	93.9	94.7	94.8	0.78	0.86	0.89	77
55	75	250S/M	357.15	8	2.4	2.8	1.15478	9/20	470	70	1475	93.9	94.9	95.2	0.75	0.83	0.87	95.8
75	100	280S/M	472.99	7.4	2.2	2.4	2.16799	21/46	660	70	1485	94.5	95.5	95.8	0.77	0.85	0.87	130
90	125	280S/M	591.24	8.1	2.4	2.6	2.81036	22/48	800	70	1485	95	95.7	96	0.78	0.85	0.88	154
110	150	315S/M	709.49	8	2.4	2.6	3.21184	29/64	860	72	1485	95	95.8	96.3	0.75	0.84	0.87	190
132	175	315S/M	827.74	8.3	2.5	2.6	3.77391	34/75	1000	72	1485	95.6	96.3	96.4	0.76	0.85	0.87	227
160	220	315S/M	1040.59	8.2	2.4	2.7	3.77391	18/40	1000	72	1485	95.7	96.3	96.5	0.75	0.84	0.87	275
250	340	355M/L	1602.78	8.3	2.3	2.6	8.38871	8/18	1380	79	1490	95.8	96.6	96.8	0.78	0.85	0.88	424
300	400	355M/L	1885.63	8.3	2.2	2.2	10.25287	17/37	1750	79	1490	95.7	96.6	96.9	0.78	0.85	0.89	502
315	430	355M/L	2027.05	6.7	2.1	2.7	11.18495	33/73	1770	79	1490	96	96.4	96.7	0.8	0.86	0.89	528

Notes:
**Class "F" insulation with ΔT105K*
Standard voltage, connection and frequency: 220-240V Δ 50Hz *380-415V Δ 50Hz*
380-415V Y 50Hz *660-690V Y 50Hz*
The values shown are subject to change without prior notice. To obtain guaranteed values please access our website.

Cast Iron Frame Motors For Zone 21
Top Premium Efficiency Exceeds EFF1

Output		380 V								415 V							
		Rated speed (rpm)	% of full load						Full load current I_n (A)	Rated speed (rpm)	% of full load						Full load current I_n (A)
			Efficiency η			Power Factor (Cos φ)					Efficiency η			Power Factor (Cos φ)			
kW	HP		50	75	100	50	75	100			50	75	100	50	75	100	
II Pole - 3000 rpm																	
4	5.5	2885	88.2	89.4	89.6	0.65	0.83	0.88	7.71	2910	88.2	89.6	89.7	0.58	0.75	0.83	7.47
5.5	7.5	2930	90.3	91.3	91.2	0.72	0.82	0.87	10.5	2950	89.8	91.2	91.3	0.66	0.77	0.83	10.1
7.5	10	2930	89	91.3	91.5	0.76	0.84	0.88	14.2	2945	89	91.3	91.6	0.7	0.8	0.85	13.4
9.2	12.5	2920	91	92	92.2	0.7	0.81	0.87	17.4	2940	91	92	92.2	0.63	0.74	0.83	16.7
11	15	2945	91.6	92.8	92.8	0.72	0.82	0.85	21.2	2955	91.6	93	93.1	0.61	0.74	0.81	20.3
15	20	2940	92.2	93.1	93.1	0.74	0.82	0.85	28.8	2950	92.1	93.2	93.3	0.68	0.8	0.83	26.9
18.5	25	2940	92.9	93.7	93.7	0.7	0.81	0.86	34.9	2950	92.8	93.8	93.8	0.63	0.77	0.84	32.7
22	30	2950	93.3	94.3	94.1	0.78	0.85	0.88	40.4	2955	93	94.2	94	0.72	0.81	0.86	37.9
30	40	2950	92.5	93.9	94.2	0.76	0.84	0.87	55.6	2960	92.6	93.9	94.2	0.74	0.82	0.85	52.1
37	50	2955	93.5	94.3	94.3	0.81	0.86	0.88	67.7	2960	93	94	94.4	0.73	0.82	0.86	63.4
45	60	2960	94.6	95.4	95.3	0.84	0.89	0.91	78.8	2970	94.4	95.4	95.4	0.8	0.87	0.89	73.7
55	75	2955	94.3	95.2	95.1	0.86	0.9	0.92	95.5	2960	94.6	95.5	95.4	0.83	0.88	0.9	89.1
75	100	2970	95	95.9	95.9	0.84	0.89	0.9	132	2975	95.2	96.2	96.1	0.8	0.86	0.88	123
90	125	2975	94.3	95.6	96	0.84	0.89	0.9	158	2980	94.3	95.6	96	0.8	0.87	0.89	147
110	150	2970	95.2	96.4	96.4	0.78	0.85	0.89	195	2975	95	96.3	96.3	0.72	0.82	0.87	183
132	175	2970	95.5	96.6	96.6	0.81	0.88	0.89	233	2975	95.3	96.5	96.5	0.75	0.86	0.88	216
160	220	2970	95.5	96.4	96.5	0.81	0.87	0.9	280	2975	95.3	96.5	96.6	0.77	0.85	0.88	262
IV Pole - 1500 rpm																	
4	5.5	1440	87.5	88.7	88.9	0.7	0.8	0.85	8.043	1450	87.3	89.9	89.9	0.62	0.74	0.81	7.64
5.5	7.5	1460	89	90	90.5	0.72	0.81	0.86	10.7	1470	88	89.9	90.6	0.65	0.77	0.83	10.2
7.5	10	1460	89.5	91	91.5	0.73	0.82	0.86	14.5	1470	88	91	91.7	0.68	0.8	0.84	13.5
11	15	1465	91	92.2	92.5	0.64	0.75	0.82	22	1475	91	92.2	92.6	0.6	0.7	0.78	21.2
15	20	1460	91.2	92.3	92.8	0.7	0.79	0.84	29.2	1470	91	92.3	92.8	0.6	0.73	0.8	28.1
18.5	25	1465	92	93.2	93.5	0.73	0.84	0.87	34.6	1475	92	93.2	93.6	0.65	0.78	0.84	32.7
22	30	1470	93	94	94.3	0.7	0.8	0.85	41.7	1475	92.5	93.9	94.3	0.66	0.76	0.83	39.1
30	40	1475	94.1	94.6	94.4	0.69	0.79	0.84	57.5	1480	93.8	94.5	94.5	0.6	0.73	0.8	55.2
37	50	1475	93.5	94.7	94.9	0.78	0.86	0.89	66.6	1480	93.3	94.6	94.8	0.76	0.84	0.87	62.4
45	60	1475	94	94.8	94.5	0.79	0.87	0.9	80.4	1480	93.8	94.7	94.8	0.76	0.85	0.88	75
55	75	1475	94	94.8	95.2	0.76	0.84	0.88	100	1480	93.8	94.8	95.1	0.73	0.82	0.86	93.6
75	100	1480	94.6	95.5	95.8	0.79	0.86	0.88	135	1485	94.3	95.5	95.7	0.75	0.84	0.86	127
90	125	1485	95	95.6	95.9	0.8	0.86	0.89	160	1485	95	95.7	96	0.75	0.84	0.87	150
110	150	1480	95	95.8	96.2	0.76	0.85	0.88	197	1485	94.8	95.7	96.2	0.73	0.83	0.86	185
132	175	1480	95.5	96.3	96.3	0.78	0.86	0.88	237	1485	95.5	96.2	96.4	0.73	0.84	0.86	222
160	220	1480	95.8	96.3	96.5	0.77	0.85	0.88	286	1485	95.5	96.2	96.5	0.7	0.83	0.85	271
250	340	1490	96	96.6	96.8	0.8	0.86	0.89	441	1490	95.5	96.5	96.8	0.75	0.84	0.87	413
300	400	1490	95.8	96.6	96.9	0.8	0.86	0.9	523	1490	95.5	96.6	96.8	0.75	0.84	0.88	490
315	430	1490	96.2	96.5	96.6	0.83	0.87	0.89	557	1490	95.6	96.3	96.7	0.77	0.84	0.88	515

Cast Iron Frame Motors For Zone 21

Mechanical Data

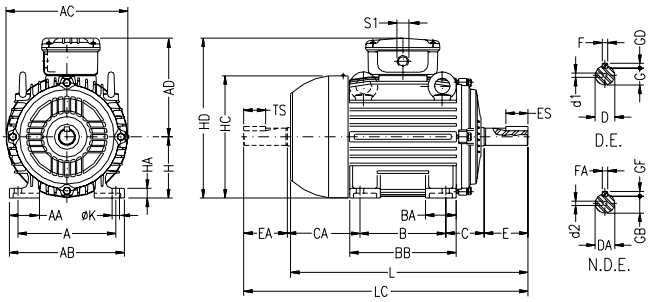

IEC FRAME	A	AA	AB	AC	AD	B	BA	BB	C	CA	SHAFT DIMENSIONS											H	HA	HC	HD	K	L	LC	S1	d1	d2	BEARINGS	
											D	E	ES	F	G	GD	DA	EA	TS	FA	GB	GF										D.E.	N.D.E.
63	100	21	116	125	119	80	22	95	40	78	11j6	23	14	4	8.5	4	9j6	20	12	3	7.2	3	63	8	124	182	7	216	241		EM4	EM3	6201-ZZ	
71	112	30	132	141	127	90	38	113.5	45	88	14j6	30	19	5	11	5	11j6	23	14	4	8.5	4	71	12	139	198		248	276	2xM20x1.5	DM5	EM4	6203-ZZ	6202-ZZ
80	125	35	149	159	136	100	40	125.5	50	93	19j6	40	28	6	15.5	6	14j6	30	18	5	11	5	80	13	157	216	10	276	313		DM6	DM4	6204-ZZ	6203-ZZ
90S	140	38	164	179	155	125	42	131	56	104	24j6	50	36	8	20	7	16j6	40	28		13		90	15	177	245		304	350	2xM25x1.5	DM8	DM6	6205-ZZ	6204-ZZ
90L								156																				329	375					
100L	160	49	188	199	165	140	50	173	63	118	28j6	60	45		24		22j6	50	36	6	18.5	6	100	16	198	265	12	376	431		DM10	DM8	6206-ZZ	6205-ZZ
112M	190	48	220	222	184			177	70	128							24j6			8	20	7	112	18.5	235	296		393	448				6307-ZZ	6206-ZZ
132S	216	51	248	279	212	178	55	187	89	159	38k6	80	63	10	33	8	28j6	60	45		24		132	20	274	344		452	519	2xM32x1.5	DM12	DM10	6308-ZZ	6207-ZZ
132M								225																				490	557					
160M	254	64	308	312	255	210	65	254	108	174	42k6	110	80	12	37		42k6	110	80	12	37	8	160	22	317	415	14.5	598	712	2xM40x1.5	DM16		6309-C3	6209-Z-C3
160L						254		298																				642	756					
180M	279	80	350	358	275	241	75	294	121	200	48k6			14	42.5	9	48k6			14	42.5	9	180	28	360	455		664	782				6311-C3	6211-Z-C3
180L						279		332																				702	820					
200M	318	82	385	396	300	267	85	370	133	222	55m6			16	49	10							200	30	432	500	18.5	729	842	2xM50x1.5			6312-C3	6212-Z-C3
200L						305																						767	880					
225S/M	356	80	436	476	373	286	105	391	149	280	55m6*		100				55m6*		100	16	49	10	225	34	466	598		817	935				6314-C3	
						311				255	60m6						60m6											847	995					
250S/M	406	100	506				138	449	168	312	60m6*			18	53	11	60m6*				53		250	42	491	623	24	923	1071		M20			
						349				274	65m6	140	125		58		60m6	140	125	18		11						1036	1188				6316-C3	
280S/M	457		557	600	468	368	142	510	190	350	65m6*						60m6*						280		578	748								
						419				299	75m6			20	67.5	12	65m6				58													
315S/M	508	120	628		497	400	152	558	216	376	65m6*			18	58	11	60m6*				53		315	52	613	812	28	1120	1274	2xM63x1.5			6314-C3	
						457				325	80m6	170	160	22	71	14	65m6				58							1156	1308				6319-C3	6316-C3
315B		182	630	698	595	630	162	830			75m6*	140	125	20	67.5	12	-							47.5	664	865		1432	-		M20	-	6316-C3	6314-C3
											100m6	210	200	28	90	16												1502			M24		6322-C3	6319-C3
355M/L	610	140	750	816	685	560	200	760	254	458	75m6*	140	125	20	67.5	12	60m6*	140	125	18	53	11	355	50	725	1040		1398	1561		M20		6316-C3	6314-C3
						630				388	100m6	210	200	28	90	16	80m6	170	160	22	71	14						1466	1661		M24	M20	6322-C3	6319-C3

- *All the dimensions are given in millimeters*
- *Certified threaded plugs for EEx e motor line*
- *The values shown are subject to change without prior notice*

** Shaft dimensions for II pole motors, only for direct coupling*

*** For frame 100L, 3 kW, 4 poles, Premium Efficiency motors, the L dimension is 420mm and LC dimension is 475mm.*

** This data apply to EEx d - Cast Iron Motors for Zone 21 – Improved Efficiency - EFF2, Premium Efficiency – EFF1, Top Premium Efficiency – Exceeds EFF1*

Cast Iron Frame Motors For Zone 21

Mechanical Data

"FF" Flange

IEC FRAME	"FF" FLANGE									N° OF HOLES
	FLANGE	C	LA	M	N	P	T	S	α	
63	FF-115	40	9	115	95	140	3	10	45°	4
71	FF-130	45		130	110	160	3.5			
80	FF-165	50	10	165	130	200		12		
90S/L		56								
100L	FF-215	63	11	215	180	250	4	15		
112M		70								
132S/M	FF-265	89	12	265	230	300				
160M/L	FF-300	108	18	300	250	350	5	19		
180M/L		121								
200M/L	FF-350	133		350	300	400				
225S/M	FF-400	149		400	350	450			22°30'	8
250S/M	FF-500	168		500	450	550				
280S/M		190								
315S/M	FF-600	216	22	600	550	660	6	24		
315B										
355M/L	FF-740	254		740	680	800				

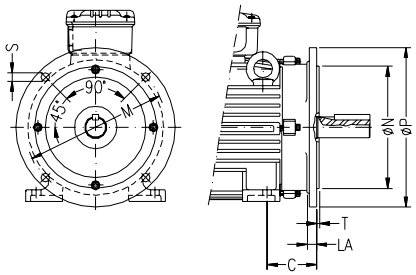

"C" Din Flange

IEC FRAME	"C" DIN FLANGE							N° OF HOLES
	FLANGE	C	M	N	P	S	T	
63	C-90	40	75	60	90	M5	2.5	4
71	C-105	45	85	70	105	M6		
80	C-120	50	100	80	120		3	
90S/L	C-140	56	115	95	140	M8		
100L	C-160	63	130	110	160		3.5	
112M		70						
132S/M	C-200	89	165	130	200	M10		

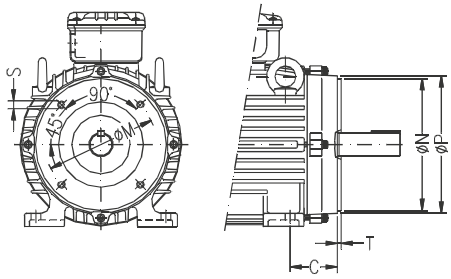

WEG Full Range of Products for Hazardous Areas

EXPLOSION PROOF – Ex d EXPLOSION PROOF WITH INCREASED SAFETY TERMINAL BOX – Ex de	LOW VOLTAGE MEET ATEX DIRECTIVE ALSO AVAILABLE IN HIGH EFFICIENCY		CESI	ATEX CLASSIFICATION Category 2 and 3 (gas); Groups IIA and IIB; T4 IEC CLASSIFICATION Zone 1 and 2; Groups IIA and IIB; T4
	LOW VOLTAGE MEET ATEX DIRECTIVE			
	LOW & MEDIUM VOLTAGE MEET ATEX DIRECTIVE		CERTIFIED BY IECEx	ATEX CLASSIFICATION Category 2 and 3 (gas and dust); Groups IIA, IIB and IIC; T4 IEC CLASSIFICATION Zone 1, 2 and 22 (zone 21 under request); Groups IIA, IIB and IIC; T4
	LOW VOLTAGE MEET ATEX DIRECTIVE			
	MEDIUM VOLTAGE MEET ATEX DIRECTIVE			ATEX CLASSIFICATION Category 2 and 3 (gas); Groups IIA, IIB and IIC; T4 IEC CLASSIFICATION Zone 1 and 2; Groups IIA, IIB and IIC; T4
INCREASED SAFETY – Ex e	LOW VOLTAGE MEET ATEX DIRECTIVE		CERTIFIED BY PTB	
	MEDIUM VOLTAGE MEET ATEX DIRECTIVE		CERTIFIED BY PTB	ATEX CLASSIFICATION Category 2 and 3 (gas); Groups IIA, IIB and IIC; T4 IEC CLASSIFICATION Zone 1 and 2; Groups IIA, IIB and IIC; T4
NON SPARKING – Ex nA	LOW VOLTAGE MEET ATEX DIRECTIVE		Manufacture´s Claim of Compliance	ATEX CLASSIFICATION Category 2 and 3 (gas); Groups IIA, IIB and IIC IEC CLASSIFICATION Zone 1 and 2; Groups IIA, IIB and IIC
	LOW & MEDIUM VOLTAGE MEET ATEX DIRECTIVE			
	LOW VOLTAGE MEET ATEX DIRECTIVE		CERTIFIED BY Baseefa Manufacture´s Claim of Compliance	
	MEDIUM VOLTAGE MEET ATEX DIRECTIVE			
PRESSURIZATION – Ex p	LOW, MEDIUM & HIGH VOLTAGE MEET ATEX DIRECTIVE		Available on request	ATEX CLASSIFICATION Category 3 (gas); Groups IIA, IIB and IIC; T3 IEC CLASSIFICATION Zone 2 and 22; Groups IIA, IIB and IIC; T3
CAST IRON FOR ZONE 21	LOW VOLTAGE		CERTIFIED BY PTB	IEC CLASSIFICATION Zone 21 (dust) Groups II

Marine Motors
Safe and Hazardous Areas

Marine Motors

1 INTRODUCTION

The present chapter refers to Low Voltage three phase, squirrel cage induction motors, manufactured under the highest quality and product Standards, to suit a very demanding environments and systems for Marine applications, namely the general standards applicable to Rotating Electrical Machines (IEC / EN), and the specific ones for marine use (IEC).
Based on a comprehensive standard range of products, WEG can supply motors in accordance with these applicable standards and complying with the requirements of the main Classification Societies, permitting its use in all marine industry (Offshore platforms, Ocean going Vessels, Passengers ships, etc.) and covering a wide range of applications on deck or below deck like for ex: pumping systems (for engine, steering, cooling and boiler rooms, etc), ventilating fans (for engine, cargo or boiler rooms, etc), fire pumps, cargo winches, oil separators, steering gears, starting air compressors amongst other extensive range of equipment and machinery that can be installed on board.
We have provided reliable service for several decades whilst offering effective solutions to today's technological challenges.
As a complement of standard executions WEG has the capability to study solutions and fulfill special requirements, allows us to develop or adapt standard products to the specific requirements of ship owners, shipyards or equipment manufacturers such as pumps, fans, compressors, etc.
For any particular requirements or specific certification, please refer to optional features described in this catalogue.

Please inquire us for a solution and we will provide you with the best suitable answer for your application!

2 MARINE MOTORS RANGE

WEG can offer a comprehensive range of motors covering all needs and specifications of Marine Industry

Standard motors fot Safe Areas

Motor type	Size	Frame	Power
W21	63 to 355	Cast Iron or Aluminium	0.75 up to 396kW
BF	315 to 500	Cast Iron	90 up to 1400kW
HGF	355 to 500	Cast Iron	100 up to 3150kW

Cast Iron motors for Hazardous Areas

Motor type	Size	Protect Method	Power
TEX	90 to 355	EEx d / EEx de IIB EEx nA	0.25 up to 378kW
BFG BFGC BFN	71 to 500	EEx d / EEx de IIB EEx d / EEx de IIC EEx nA	0.75 up to 900kW

Note: For the High Voltage electrical & mechanical data, please refer to a separate catalogue.

Other features

Other ranges are also available under request:

- EFF1 Premium and Top Premium Efficiency Motors
- Open Drip Proof motors
- High polarity Motors
- Multi-speed Motors
- TENV (non ventilated motors IC 418). Please contact us for the required power (For continuous service expect 30 to 40% of the standard power rating)
- Motors to be fed by variable speed drives: WEG benefits from a long experience in converter fed machines. WEG motors are designed to withstand the levels of dV/dT produced by inverters. To avoid circulating currents frequently responsible for bearing damages, insulated bearings are used.
- NEMA Motors: motors according to NEMA standards (dimensions)
- A. C. Synchronous Generators

3 STANDARD FEATURES

The Low Voltage motor ranges specified on this catalogue are suitable to use on 2 different onboard environments:

- Safe Areas: motors ranges W21 and BF
- Hazardous Environments: motors ranges ATEX Flameproof (W21-TEX), BFG and BFGC. These ranges meet the respective regulatory requirements in what concerns General and Specific Standards

Basic Standard Features

- Efficiency: improved EFF2
- Frame made of high-grade cast iron
- Voltages / frequencies stated on this catalogue:
  - 380V@50Hz or
  - 440V@60Hz
- Degree of Protection : IP55 as standard
- Motors fitted with V-ring seals, oil seals or labyrinth providing the best possible protection in dust and high moisture environments
- Terminal boxes with generous internal space with metric threads on entries allowing rotation in 90º.
- Insulation system thermal class: F
- Temperature rise: 90K or 70K, depending on application and requirement of
- Classification Society
- Nameplate: Stainless steel to keep a permanent record of motor data and certifications
- Colour: RAL 5007 (safe areas) or 5010 (hazardous areas)
- Re-greasing facilities frame size 225 SM and up

Optional Features

There are also some typical optional features to cover specific demands like:

- Degree of Protection: IP56 or IP65
- Special vibration class
- Special voltages available
- Insulation system thermal class: H
- Special painting
- All type of winding/bearings temperature protection/ detection
- Special shafts (materials, sizes, second shaft end)
- Special flanges
- Cable Glands
- Oil seals
- Space heaters
- Re-greasing facilities on smaller frame sizes
- Special bearing arrangements (roller-bearings for DE, trust-bearing, etc)
- Insulated bearings
- Drip cover canopy for vertical mounting
- Auxiliary terminal box
- Forced ventilation
- Encoder
- Brake
- Flying leads

Please check these options with the product cover sheet of each range.

4 STANDARDS AND CLASSIFICATION SOCIETIES

All motors are manufactured according to IEC and equivalent national standards for Rotating Electrical Machines:

- Rating and performance – IEC 60034-1
- Outputs and dimensions – IEC 60072 and EN50347
- Mechanical protection – IEC 60034-5
- Cooling method – IEC 60034-6
- Mounting arrangements – IEC 60034-7
- Insulation – IEC 60085
- Terminal identification and direction of rotation – IEC 60034-8
- Noise limits – IEC 60034-9
- Vibration limits – IEC 60034-14

Also are according to specific standards for Marine Use:

- Electrical Installations in ships – IEC 60092-series

The WEG Motors meet all requirements of all Classification Societies member of IACS:

GL	Germanischer Lloyd
BV	Bureau Veritas
DNV	Det Norske Veritas
LR	Lloyd's Register
ABS	American Bureau of Shipping
RINA	Registro Italiano Navale

Under request WEG may work also with the following IACS MEMBER SOCIET-

CCS	China Classification Society
KR	Korean Register of Shipping
NK	Nippon Kaiji Kyokai
RS	Russian Maritime Register of Shipping

5 CLASSIFICATION SOCIETY

Classification Societies	Ambient temperature ºC	Admissible temperature rise in K (measured according to resistance method) Insulation class		
		B	F	H
IEC 60034-1	40	80	105	125
IEC 60092-301	50	70	90	115
ABS	50	70	95	115
BV	45	75	100	120
CCS	45	75	95	115
DNV	45	75	100	120
GL	45	75	100	120
KR	45	75	95	115
LR	45	70	95	115
NK	45	75	100	120
RINA	45	75	100	120
RS	45	75	95	115

6 CLASSIFICATION REGULATIONS

Classification Society	Duty(1)	Output Limit kW	Tests in the presence of a Surveyor	Type Test Report accepted when based on motor with identical data	Complete test on first motor. Routine test for remaining batch	Works certificate Approved by the Classification Society
ABS	N					
	E	< 100		✓		
	E	≥ 100	✓		✓	
BV	N					
	E	< 100		✓		
	E	≥ 100	✓		✓	
DNV	N					
	E	<100		✓		
	E	≥ 100	✓		✓	
GL	N					
	E	< 50		✓		
	E	≥ 50	(2)		✓	✓
LR	N					
	E	< 100		✓		
	E	≥ 100	✓		✓	
RINA	N					
	E	< 100		✓		
	E	≥ 100	✓		✓	

7 DOCUMENTS SUPPLIED WITH MARINE MOTORS

Classification Society	Duty(1)	Output Limit kW	Routine Test Report	Type Test Report	Classification Society's Certificate based on Witness Test (4) and WEGeuro Test Report	Classification society's certificate based on WEGeuro Test Report (4)	Shaft Material		Documentation not required by Classification societies(2)
							Inspection Certificate 3.2(5) by the Class. Society	Test Report 3.1(5)	
ABS	N								✓
	E	< 100	✓						
	E	≥ 100		✓	✓		✓(3)	✓	
BV	N								✓
	E	< 100	✓						
	E	≥ 100		✓	✓		✓	✓	
DNV	N								✓
	E	<100	✓						
	E	≥ 100		✓	✓			✓	
GL	N								✓
	E	< 50	✓						
	E	≥ 50		✓		✓	✓(3)		
LR	N								✓
	E	< 100	✓						
	E	≥ 100		✓	✓		✓		
RINA	N								✓
	E	< 100	✓						
	E	≥ 100		✓	✓		✓(3)	✓	

(1) Classification Societies classify the motors as for "essential service" – E – or "non essential service" – N
(2) Classification Society not require the issue of any documentation (upon request WEGeuro can supply Routine/Type Test)
(3) Only for propulsion services
(4) One Type Test for the each motor type, a routine test for the remaining identical motors
(5) According to Standard EN 10204:2004

Safe Areas Low Voltage Motors Cast Iron Frame

Standard Features:

- Three-phase, multivoltage, IP55, TEFC
- Output: 0.12 up to 1540kW
- Frames: 63 up to 500
- Voltage: 380 V, 50Hz or 440 V, 60Hz
- Class “F” insulation (ΔT=90K or 70K)
- Continuous duty: S1
- Design N
- Ambient temperature: As per Classification Societies, 1000m.a.s.l
- Squirrel cage rotor/Aluminium die cast or Copper
- Anti-condensation drain holes
- Regreasing nipples from frame 225S/M and above
- Metric thread cable entries in terminal box
- Thermistors 1 per phase fitted on frame size 160 and above
- Suitable for Inverter Duty applications
- Balancing with half key, vibration severity according to IEC 60034.14 grade A
- Color: RAL 5007

Optional Applications:

- Degree of Protection: IP56 or IP65
- Baring seals: Lip seal / Oil seal / Taconite labyrinth seal on frame sizes 132 and above
- Cooling Method: IC410 (TENV)
- Special Voltages
- Space Heaters
- Thermal protection on windings: Thermistors up to frame 132 / RTD - Pt100 Thermostats / Thermocouples
- Auxiliary terminal box
- Thermal protection on bearings (frames 225 and above): RTD - Pt100 / Thermocouples
- Design H
- Class H insulation
- Roller bearing for frame size 160 and above
- Special shafts/flanges
- Cable glands
- Forced ventilation unit for VSD application
- Encoder
- Brake (up to 315 frame)
- Flying leads through closing plate
- Special paint finish
- Insulated bearings
- Canopy for vertical mounting
- Special balancing to meet IEC 60034.14 grade B vibration level

More options available, on request

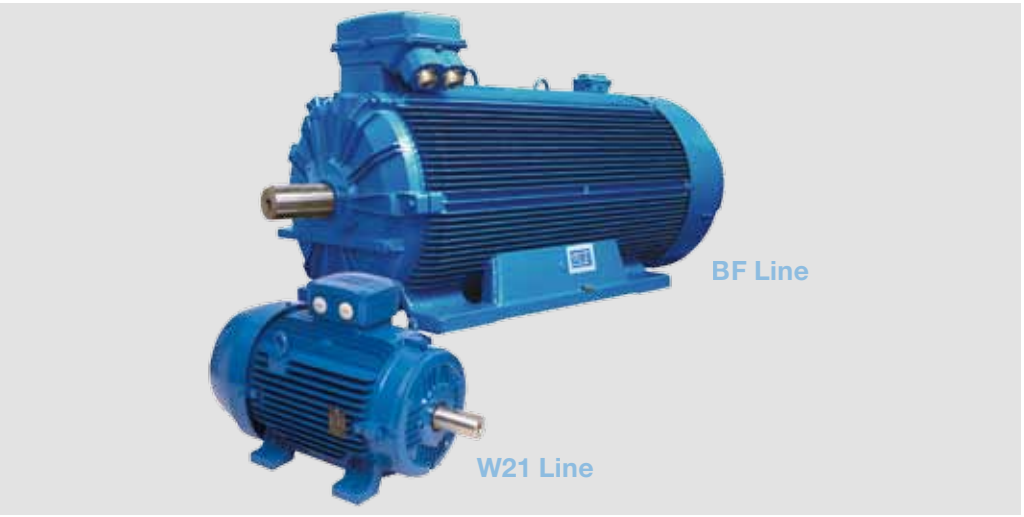

Safe Areas Low Voltage Motors - Cast Iron Frame
W21 and BF Lines

IEC Frame	Output		Full load torque Tn (Nm)	Locked rotor current Is/In	Locked rotor torque Ts/Tn	Breakdown torque Tmax / Tn	Inertia J Kgm²	Weight Kg	Rated speed (rpm)	380 V / 50 Hz						
										% of full load						Full load current I_n (A)
										Efficiency η			Power Factor (Cos φ)			
	ΔT = 90K	ΔT = 70K								50	75	100	50	75	100	
II Pole - 3000 min-1																W21 Line - Basic design
63	0.12	0.11	0.43	3.8	2 .0	2.1	0.00011	6.3	2690	48.0	55.0	58.8	0.59	0.74	0.84	0.369
63	0.18	0.16	0.64	4.2	2.1	2.0	0.00013	6.6	2700	52.5	57.5	59.5	0.60	0.75	0.85	0.541
63	0.25	0.22	0.89	4.3	2.2	2.0	0.00016	6.9	2685	54.0	59.0	60.0	0.56	0.71	0.81	0.782
71	0.37	0.33	1.3	4.3	2.0	2.0	0.00026	9	2700	62.8	66.5	67.0	0.66	0.81	0.89	0.943
71	0.55	0.49	2.0	4.2	2.2	2.4	0.00034	10	2670	68.5	70.0	69.0	0.71	0.83	0.90	1.4
80	0.75	0.66	2.6	5.0	2.1	2.1	0.00057	12	2740	69.0	73.0	72.5	0.67	0.79	0.86	1.8
80	1.1	0.97	3.8	5.0	2.3	2.3	0.00079	14	2745	75.5	76.5	76.5	0.68	0.81	0.87	2.5
90S	1.5	1.3	5.1	6.3	2.3	2.2	0.0017	18	2820	78.0	80.1	78.9	0.70	0.81	0.87	3.3
90L	2.2	1.9	7.5	6.8	2.5	2.5	0.0022	20	2790	78.5	80.2	80.8	0.70	0.82	0.88	4.7
100L	3	2.6	10	6.7	2.0	2.5	0.0052	27	2855	82.4	83.0	83.0	0.75	0.85	0.89	6.2
112M	4	3.5	13	6.8	2.1	2.6	0.0073	39	2860	83.0	84.2	84.5	0.77	0.86	0.89	8.1
132S	5.5	4.9	18	6.5	2.1	2.7	0.0159	50	2895	84.4	86.0	86.0	0.77	0.85	0.89	10.9
132S	7.5	6.6	25	6.4	2.1	2.3	0.0187	54	2890	86.8	87.5	87.0	0.78	0.86	0.89	14.7
132M	9.2	8.1	30	7.5	2.4	2.8	0.0243	69	2900	87.4	88.5	88.4	0.76	0.85	0.89	17.8
160M	11	9.7	36	6.5	1.9	2.7	0.0353	97	2915	87.5	88.5	88.5	0.76	0.84	0.87	21.7
160M	15	13.2	49	7.4	2.0	2.7	0.0471	109	2925	88.5	90.0	90.0	0.74	0.83	0.87	29.1
160L	18.5	15	60	8.0	2.2	2.7	0.0559	122	2930	89.5	90.5	90.5	0.74	0.83	0.87	35.7
180M	22	15	72	7.3	2.1	3.0	0.096	172	2935	91.5	92.0	91.5	0.78	0.85	0.88	41.5
200L	30	25	97	7.3	2.3	2.6	0.179	229	2955	91.0	92.0	92.2	0.76	0.84	0.87	56.8
200L	37	30	120	7.0	2.6	2.7	0.206	245	2950	91.0	92.0	92.5	0.76	0.84	0.87	69.9
225S/M	45	35	145	7.9	2.4	3.2	0.448	407	2960	91.9	93.4	93.5	0.86	0.90	0.92	80.4
250S/M	55	45	177	8.5	2.6	2.7	0.502	456	2965	91.8	93.2	93.5	0.86	0.91	0.92	97.1
280S/M	75	65	241	7.5	2.1	2.6	1.1	658	2970	91.9	93.6	94.3	0.84	0.88	0.90	134
280S/M	90	75	289	8.1	2.1	2.6	1.3	713	2970	92.3	93.9	94.5	0.82	0.88	0.90	161
315S/M	110	95	354	7.6	2.1	2.6	1.4	809	2970	93.1	94.4	94.9	0.81	0.87	0.90	196
315S/M	132	115	425	7.5	2.1	2.6	1.6	870	2965	93.5	94.7	94.8	0.84	0.89	0.91	232
315S/M	160	140	514	7.3	2	2.3	2.1	1000	2970	94.2	95.0	95.3	0.86	0.90	0.91	280
315B	200	175	643	6.4	1.6	2.6	2.8	1315	2970	92.2	93.4	93.6	0.74	0.83	0.86	377
315B	250	220	804	6.5	1.7	2.5	3.2	1380	2970	93.2	94.0	94.3	0.77	0.84	0.87	463
315B	315	275	1013	6.7	1.7	2.4	4.0	1542	2970	94.0	94.5	94.4	0.80	0.87	0.89	570
355M/L	200	175	641	7.2	1.6	2.4	4.8	1575	2980	93.7	95.0	95.3	0.90	0.92	0.92	347
355M/L	250	220	801	7.8	1.7	2.3	5.7	1401	2980	94.5	95.8	96.0	0.90	0.92	0.93	425
II Pole - 3000 min-1																W21 Line - High Output
132M	11	9.7	36	8	2.5	3	0.02804	74	2910	88.5	89.5	89.0	0.76	0.84	0.88	21.3
160L	22	15	72	7.5	2.2	2.7	0.06766	132	2925	90.5	90.7	90.5	0.77	0.85	0.88	42.0
180L	30	25	97	8.7	2.2	2.6	0.13622	197	2940	92.0	92.3	92.3	0.78	0.84	0.88	56.1
200M	30	25	97	7.3	2.3	2.6	0.1794	229	2955	91.0	92.0	92.2	0.76	0.84	0.87	56.8
200M	37	30	120	7	2.6	2.7	0.2063	245	2950	91.0	92.0	92.5	0.76	0.84	0.87	69.9
250S/M	75	65	242	8.3	2.7	3.1	0.556	478	2960	92.6	93.3	93.3	0.85	0.89	0.91	134
280S/M	110	95	354	7.6	2.1	2.6	1.4	743	2970	93.1	94.4	94.9	0.81	0.87	0.90	196
280S/M	132	115	425	7.5	2.1	2.6	1.6	810	2965	93.5	94.7	94.8	0.84	0.89	0.91	232
315S/M	200	175	642	7.9	2	2.7	2.2	1009	2975	95.5	96.0	96.2	0.81	0.86	0.89	355
II Pole - 3000 min-1																BF Line
BF8 315L	160	140	513	6.8	1.9	3.1	1.6	1050	2978	93.9	95.3	95.9	0.81	0.88	0.90	282
BF8 315L	200	175	641	7.0	1.7	3.2	2.0	1150	2978	94.7	95.6	96.2	0.84	0.89	0.91	347
BF8 315L	250	220	801	7.5	1.8	2.9	2.3	1250	2981	95.3	96.3	96.6	0.82	0.89	0.91	432
BF6 355L	250	220	801	6.2	1.5	2.9	2.9	1450	2980	94.3	95.7	96.2	0.82	0.87	0.89	444
BF6 355L	280	245	898	6.0	1.5	2.7	3.2	1600	2978	94.8	96.0	96.4	0.84	0.88	0.89	496
BF6 355L	315	275	1009	6.6	1.8	3.0	3.4	1700	2980	95.1	96.2	96.6	0.83	0.88	0.90	550
BF6 355L	355	310	1138	6.6	1.7	3.0	3.9	1750	2980	95.4	96.3	96.7	0.83	0.88	0.90	620
BF6 355J	400	350	1281	7.3	2.2	3.1	4.5	2000	2982	96.0	96.8	97.1	0.84	0.89	0.90	695
BF6 400L	450	395	1440	7.5	2.0	3.4	8.0	2450	2985	95.5	96.6	97.1	0.84	0.89	0.91	774
BF6 400L	500	440	1600	7.5	1.9	3.2	8.4	2600	2985	95.9	96.9	97.3	0.85	0.89	0.91	858
BF6 400J (2)	560	490	1790	7.6	2.3	3.4	9.4	2950	2987	96.0	96.9	97.3	0.85	0.89	0.91	961

(1) Copper bar rotor
(2) Special Terminal box
(3) Special Oversized Terminal box.
VSD Operation:
- For VSD, with quadratic torque application load, please consider maximum output related to the Dq=70K column although considering temperature rise 90K. (Valid for frame sizes 400 and below. For frame sizes 450 and 500, please refer to us)
- For applications with constant load torque, please contact WEG.

Notes:
- All values are according to IEC 60034-1 tolerances.
- This data can be changed without prior notice.

Safe Areas Low Voltage Motors - Cast Iron Frame
W21 and BF Lines

IEC Frame	Output		Full load torque Tn (Nm)	Locked rotor current Is/In	Locked rotor torque Ts/Tn	Breakdown torque Tmax / Tn	Inertia J Kgm²	Weight Kg	Rated speed (rpm)	440 V / 60 Hz						
										% of full load						Full load current I_n (A)
										Efficiency η			Power Factor (Cos φ)			
	ΔT = 90K	ΔT = 70K								50	75	100	50	75	100	
II Pole - 3600 min-1																W21 Line - Basic design
63	0.14	0.12	0.41	3.8	2.3	2.4	0.00011	6.3	3285	49.0	56.0	60.5	0.58	0.72	0.83	0.366
63	0.21	0.19	0.61	4.2	2.3	2.3	0.00013	6.6	3280	53.0	57.0	62.0	0.63	0.76	0.85	0.523
63	0.29	0.26	0.84	4.3	2.4	2.3	0.00016	6.9	3280	55.5	58.5	61.5	0.58	0.71	0.81	0.764
71	0.42	0.37	1.2	4.3	2.2	2.3	0.00026	9	3295	63.0	67.0	68.6	0.68	0.81	0.88	0.913
71	0.62	0.55	1.8	4.2	2.4	2.6	0.00034	10	3280	69.0	70.0	69.5	0.73	0.83	0.90	1.3
80	0.85	0.75	2.4	5.0	2.2	2.3	0.00057	12	3350	69.0	73.0	73.0	0.69	0.80	0.86	1.8
80	1.3	1.1	3.7	5.0	2.5	2.5	0.00079	14	3340	76.0	77.0	76.4	0.71	0.82	0.87	2.6
90S	1.8	1.6	5.0	6.3	2.2	2.0	0.0017	18	3410	78.0	80.1	78.9	0.74	0.83	0.88	3.4
90L	2.6	2.3	7.4	6.8	2.4	2.6	0.0022	20	3370	87.5	80.5	81.5	0.73	0.83	0.88	4.8
100L	3.6	3.2	10.0	6.7	1.9	2.5	0.0052	27	3445	81.8	83.1	83.2	0.79	0.87	0.90	6.3
112M	4.8	4.2	13	6.8	1.9	2.6	0.0073	39	3450	82.5	84.0	84.8	0.80	0.87	0.90	8.3
132S	6.3	5.6	17	6.5	2.1	2.8	0.0159	50	3495	83.6	86.0	86.5	0.79	0.86	0.89	10.7
132S	8.5	7.5	23	6.4	2.1	2.3	0.0187	54	3490	86.2	87.6	87.6	0.80	0.87	0.89	14.3
132M				7.5	2.4	2.8	0.0243	69	3500	86.8	88.7	88.7	0.79	0.86	0.89	17.5
160M	12.5	11	34	6.5	1.9	2.7	0.0353	97	3515	87.5	89.0	89.0	0.77	0.84	0.87	21.2
160M	17	15	46	7.4	2.0	2.7	0.0471	109	3525	88.5	90.0	90.0	0.77	0.84	0.88	28.2
160L	21	18.5	57	8.0	2.2	2.7	0.0559	122	3530	89.0	91.0	91.0	0.76	0.84	0.88	34.4
180M	25	20	68	7.3	2.1	3.0	0.0965	172	3530	91.0	92.0	92.0	0.79	0.85	0.88	40.5
200L	36	30	97	7.3	2.3	2.5	0.1794	229	3555	91.0	92.0	92.5	0.79	0.85	0.88	58.0
200L	42	35	113	7.0	2.6	2.7	0.2063	245	3555	91.0	92.5	92.5	0.78	0.85	0.88	67.7
225S/M	53	45	142	7.9	2.4	3.1	0.4485	407	3560	91.0	93.0	93.5	0.86	0.90	0.92	80.8
250S/M	63	55	169	8.5	2.6	2.7	0.5023	456	3560	91.0	93.0	93.5	0.87	0.91	0.92	96.1
280S/M	85	70	227	7.5	2.1	2.6	1.1	658	3570	91.0	93.0	94.0	0.84	0.88	0.90	132
280S/M	105	90	281	8.1	2.1	2.6	1.3	713	3565	92.0	93.5	94.4	0.83	0.88	0.90	162
315S/M	125	110	334	7.6	2.1	2.6	1.4	809	3570	93.0	94.0	94.5	0.82	0.88	0.90	193
315S/M	151	130	405	7.5	2.2	2.6	1.6	870	3565	93.3	94.6	94.8	0.84	0.89	0.91	230
315S/M	185	160	495	7.3	2	2.2	2.1	1000	3570	94.0	94.9	95.4	0.87	0.90	0.91	280
315B	230	200	615	6.4	1.6	2.6	2.8	1315	3570	91.8	93.3	93.6	0.74	0.83	0.86	375
315B	290	255	777	6.5	1.6	2.4	3.2	1380	3565	93.1	94.0	94.3	0.78	0.84	0.87	464
315B	370	325	991	6.7	1.6	2.4	4.0	1542	3565	94.0	94.5	94.4	0.80	0.87	0.89	578
355M/L	230	200	614	7.2	1.6	2.4	4.8	1575	3580	92.4	94.5	95.0	0.90	0.91	0.92	345
355M/L	290	255	774	7.8	1.7	2.2	5.7	1401	3580	94.5	95.5	95.9	0.90	0.92	0.93	427
II Pole - 3600 min-1																W21 Line - High Output
132M	12.5	11	34	8.0	2.5	2.9	0.0280	74	3500	89.5	90.0	90.0	0.78	0.85	0.88	20.7
160L	25	20	68	7.5	2.2	2.7	0.0677	132	3525	90.2	90.7	90.5	0.78	0.85	0.88	41.2
180L	36	30	97	8.7	2.1	2.6	0.1362	197	3535	92.0	92.5	92.5	0.80	0.85	0.88	58.0
200M	36	30	97	7.3	2.3	2.5	0.1794	229	3555	91.0	92.0	92.5	0.79	0.85	0.88	58.0
200M	42	35	113	7.0	2.6	2.7	0.2063	245	3555	91.0	92.5	92.5	0.78	0.85	0.88	67.7
250S/M	85	70	228	8.3	2.7	3.1	0.556	478	3560	92.5	93	93.3	0.85	0.9	0.91	131
280S/M	125	110	334	7.6	2.1	2.6	1.4	743	3570	93	94	94.5	0.82	0.88	0.9	193
280S/M	151	130	405	7.5	2.2	2.6	1.6	810	3565	93.3	94.6	94.8	0.84	0.89	0.91	230
315S/M	230	200	614	7.9	2	2.7	2.2	1009	3575	95.4	96	96.1	0.82	0.87	0.89	353
II Pole - 3600 min-1																BF Line
BF8 315L	175	150	468	6.8	1.9	3.1	1.6	1050	3574	93.8	95.2	95.8	0.81	0.88	0.90	266
BF8 315L	220	190	588	7.0	1.7	3.2	2.0	1150	3574	94.6	95.5	96.1	0.84	0.89	0.91	330
BF8 315L	275	240	734	7.5	1.8	2.9	2.3	1250	3577	95.2	96.2	96.5	0.82	0.89	0.91	411
BF6 355L	275	240	734	6.2	1.5	2.9	2.9	1450	3576	94.2	95.6	96.1	0.82	0.87	0.89	422
BF6 355L	305	265	815	6.0	1.5	2.7	3.2	1600	3574	94.7	95.9	96.3	0.84	0.88	0.89	467
BF6 355L	345	300	921	6.6	1.8	3.0	3.4	1700	3576	95.0	96.1	96.5	0.83	0.88	0.90	521
BF6 355L	390	340	1042	6.6	1.7	3.0	3.9	1750	3576	95.3	96.2	96.6	0.83	0.88	0.90	589
BF6 355J	440	385	1174	7.3	2.2	3.1	4.5	2000	3578	95.9	96.7	97.0	0.84	0.89	0.90	661
BF6 400L	495	435	1320	7.5	2.0	3.4	8.0	2450	3582	95.4	96.5	97.0	0.84	0.89	0.91	736
BF6 400L	550	485	1466	7.5	1.9	3.2	8.4	2600	3582	95.8	96.8	97.2	0.85	0.89	0.91	816
BF6 400J (2)	615	540	1639	7.6	2.3	3.4	9.4	2950	3584	95.9	96.8	97.2	0.85	0.89	0.91	912

Safe Areas Low Voltage Motors - Cast Iron Frame
W21 and BF Lines

IEC Frame	Output		Full load torque Tn (Nm)	Locked rotor current Is/In	Locked rotor torque Ts/Tn	Breakdown torque Tmax / Tn	Inertia J Kgm²	Weight Kg	Rated speed (rpm)	380 V / 50 Hz						
										% of full load						Full load current I_n (A)
										Efficiency η			Power Factor (Cos φ)			
	ΔT = 90K	ΔT = 70K								50	75	100	50	75	100	
IV Pole - 1500 min⁻¹															W21 Line - Basic design	
63	0.12	0.11	0.84	3.5	1.8	2	0.00034	7	1360	47.0	55.0	57.0	0.53	0.65	0.76	0.421
63	0.18	0.16	1.3	3.4	1.8	1.9	0.00039	7	1340	46.0	54.0	58.0	0.54	0.67	0.79	0.597
71	0.25	0.22	1.9	3.5	1.7	1.8	0.00039	9	1280	50.0	55.0	56.0	0.55	0.70	0.80	0.848
71	0.37	0.33	2.7	3.7	1.8	1.8	0.00056	10	1300	57.0	60.0	62.0	0.52	0.67	0.78	1.2
80	0.55	0.49	3.8	4.7	1.8	2	0.0019	13	1400	61.0	68.0	68.2	0.61	0.75	0.86	1.4
80	0.75	0.66	5.2	5.0	2.0	2	0.0023	14	1380	65.0	71.5	72.0	0.61	0.75	0.84	1.9
90S	1.1	0.97	7.5	5.6	2.0	2.2	0.0039	18	1405	73.0	76.0	76.5	0.62	0.75	0.83	2.6
90L	1.5	1.3	10	5.5	2.0	2.1	0.0048	20	1400	78.5	79.0	79.0	0.65	0.78	0.86	3.4
100L	2.2	1.9	15	5.6	2.1	2.2	0.0065	26	1400	80.5	81.0	80.5	0.67	0.79	0.85	4.9
100L	3	2.6	21	6.0	2.4	2.5	0.0084	30	1390	81.5	82.0	81.9	0.64	0.77	0.84	6.6
112M	4	3.5	27	6.2	1.8	2.2	0.0147	42	1430	84.3	85.0	84.5	0.71	0.81	0.86	8.4
132S	5.5	4.9	36	6.5	1.8	2.2	0.0349	51	1445	85.5	86.0	85.6	0.70	0.81	0.86	11.4
132M	7.5	6.6	49	6.7	1.8	2.5	0.0465	59	1450	86.5	86.8	86.8	0.71	0.82	0.87	15.1
132M	9.2	8.1	61	7.5	1.9	2.5	0.0582	71	1450	87.3	87.8	87.4	0.70	0.82	0.87	18.4
160M	11	9.7	72	6.0	2.0	2.3	0.07528	102	1455	87.0	88.5	88.0	0.68	0.79	0.83	22.9
160L	15	13.2	98	5.8	2.0	2.2	0.105	121	1455	89.0	89.5	89.3	0.72	0.82	0.85	30.0
180M	18.5	16	121	7.0	2.3	2.6	0.161	172	1465	90.0	90.5	90.2	0.71	0.81	0.85	36.7
180L	22	18.5	144	7.0	2.5	2.6	0.188	174	1460	90.6	91.3	90.7	0.73	0.82	0.86	42.9
200L	30	25	195	6.7	2.2	2.4	0.303	233	1470	91.0	92.0	91.6	0.73	0.81	0.85	58.5
225S/M	37	30	240	7.2	2.1	2.4	0.630	352	1475	91.6	92.4	92.5	0.79	0.86	0.89	68.3
225S/M	45	35	291	7.0	2.1	2.5	0.770	379	1475	91.3	92.8	93.5	0.80	0.87	0.89	82.2
250S/M	55	45	356	7.0	2.1	2.4	0.980	450	1475	92.8	93.5	93.4	0.83	0.88	0.91	98.3
280S/M	75	65	484	6.7	1.9	2.2	2.3	720	1480	92.8	93.9	94.2	0.85	0.89	0.90	134
280S/M	90	75	581	7.1	2.2	2.3	2.6	736	1480	92.6	94.1	94.2	0.84	0.88	0.90	161
315S/M	110	95	710	7.1	2.1	2.4	2.8	862	1480	92.8	93.6	94.2	0.80	0.86	0.88	202
315S/M	132	115	852	7.3	2.3	2.4	3.8	1006	1480	93.5	94.9	95.1	0.81	0.86	0.89	237
315S/M	160	140	1032	7.0	2.2	2.5	3.8	1016	1480	93.0	95.0	95.4	0.78	0.85	0.88	290
315B	200	175	1291	6.8	1.7	2.6	4.0	1240	1480	94.2	95.1	95.0	0.72	0.80	0.82	390
315B	250	220	1613	6.2	1.6	2.3	5.2	1330	1480	95.0	95.4	95.2	0.76	0.83	0.85	469
315B	315	275	2033	7.4	1.8	2.5	5.7	1560	1480	94.6	95.3	95.3	0.73	0.81	0.84	598
355M/L	200	175	1286	6.6	2.1	2	7.5	1502	1485	94.2	95.0	95.1	0.84	0.87	0.89	359
355M/L	250	220	1608	6.9	2	2.3	8.4	1608	1485	94.5	95.2	95.7	0.82	0.87	0.89	446
355M/L	315	275	2026	6.7	2	2.2	10.3	1854	1485	95.0	95.8	96.1	0.83	0.87	0.89	560
IV Pole - 1500 min⁻¹															W21 Line - High Output	
132M/L	11	9.7	72	7.5	2.2	2.5	0.0698	83	1450	87.5	88.4	88.0	0.75	0.84	0.89	21.4
160M	15	13.2	98	5.8	2.0	2.2	0.105	121	1455	89.0	89.5	89.3	0.72	0.82	0.85	30.0
160L	18.5	16	122	6.0	2.2	2.2	0.115	130	1450	89.0	90.0	89.4	0.70	0.80	0.84	37.4
180M	22	15	144	7.0	2.5	2.6	0.188	174	1460	90.6	91.3	90.7	0.73	0.82	0.86	42.9
180L	30	25		7.2	2.7	2.7	0.215	186	1460	89.5	90.3	90.3	0.66	0.77	0.83	60.7
200M	30	25	195	6.7	2.2	2.4	0.303	233	1470	91.0	92.0	91.6	0.73	0.81	0.85	58.5
225S/M	55	45	356	7.0	2.1	2.4	0.980	426	1475	92.8	93.5	93.4	0.83	0.88	0.91	98.3
250S/M	75	65	486	7.2	2.2	2.4	1.2	488	1475	92.6	93.4	93.5	0.80	0.86	0.88	138
280S/M	110	95	710	7.1	2.1	2.4	2.8	796	1480	92.8	93.6	94.2	0.80	0.86	0.88	202
280S/M	132	115	852	7.5	2.1	2.4	3.4	881	1480	93.0	93.5	94.3	0.81	0.86	0.89	241
315S/M	200	175	1291	6.7	2.1	2.3	3.8	1015	1480	94.5	95.0	95.4	0.78	0.84	0.86	370
IV Pole - 1500 min⁻¹															W21 Line - High Output	
BF8 315L	160	140	1029	6.8	2.0	2.5	2.6	1050	1485	93.9	95.0	95.3	0.74	0.82	0.86	297
BF8 315L	200	175	1287	6.9	2.1	2.5	2.6	1150	1484	93.9	95.0	95.3	0.73	0.81	0.85	375
BF8 315L	250	220	1608	7.5	2.5	2.5	3.7	1250	1485	94.9	95.8	96.0	0.75	0.83	0.86	460
BF6 355L	250	220	1605	6.7	2.0	2.3	5.3	1450	1488	94.3	95.5	96.0	0.74	0.82	0.85	465
BF6 355L	280	245	1797	6.9	2.1	2.4	5.9	1450	1488	94.6	95.8	96.2	0.72	0.82	0.85	520
BF6 355L	315	275	2022	6.9	2.1	2.4	6.6	1650	1488	95.0	96.0	96.4	0.75	0.82	0.85	584
BF6 355L	355	310	2277	7.4	2.6	2.6	7.4	1850	1489	96.1	97.1	96.5	0.73	0.81	0.85	658
BF6 355J	400	350	2567	7.0	2.5	2.5	8.7	2100	1488	95.5	96.3	96.6	0.78	0.84	0.87	723
BF6 355J	450	395	2888	7.1	2.4	2.4	9.8	2250	1488	95.7	96.5	96.8	0.76	0.84	0.87	812
BF6 400L	450	395	2884	6.7	1.6	2.6	12.7	2500	1490	96.1	96.6	97.0	0.80	0.85	0.87	810
BF6 400L	500	440	3205	6.7	1.6	2.6	13.1	2700	1490	96.4	96.9	97.0	0.79	0.85	0.87	900
BF6 400J (2)	560	490	3589	6.8	1.7	2.5	13.8	2750	1490	96.5	97.0	97.1	0.78	0.85	0.87	1007
BF6 400J (2)	630	555	4038	7.5	2.1	2.8	15.8	2950	1490	96.4	96.9	97.1	0.75	0.83	0.87	1133
BF6 450H (2)	710	625	4545	6.9	2.0	2.7	20.1	4100	1492	95.9	96.8	97.2	0.78	0.85	0.87	1276
BF6 450H (2)	800	705	5121	7.0	2.0	2.9	22.6	4600	1492	96.2	97.0	97.3	0.78	0.85	0.87	1436
BF6 450H (1)(3)	900	790	5761	7.0	1.2	2.0	25.1	5400	1492	96.5	97.1	97.3	0.83	0.86	0.87	1615
BF6 500K (1)(3)	1000	880	6401	7.5	1.7	2.3	50.6	5700	1492	96.3	97.0	97.2	0.83	0.86	0.87	1797
BF6 500K (1)(3)	1120	985	7169	7.5	1.7	2.3	59.8	5900	1492	96.5	97.1	97.3	0.84	0.87	0.87	2010
BF6 500H (1)(3)	1250	1100	Please refer to us													
BF6 500H (1)(3)	1400	1230														

(1) Copper bar rotor
(2) Special Terminal box
(3) Special Oversized Terminal box.
VSD Operation:
- For VSD, with quadratic torque application load, please consider maximum output related to the Dq=70K column although considering temperature rise 90K. (Valid for frame sizes 400 and below. For frame sizes 450 and 500, please refer to us)
- For applications with constant load torque, please contact WEG.

Notes:
- All values are according to IEC 60034-1 tolerances.
- This data can be changed without prior notice.

Safe Areas Low Voltage Motors - Cast Iron Frame
W21 and BF Lines

IEC Frame	Output		Full load torque	Locked rotor current	Locked rotor torque	Breakdown torque	Inertia J	Weight	Rated speed	440 V / 60 Hz						
										% of full load						Full load current
										Efficiency η			Power Factor (Cos φ)			
	ΔT = 90K	ΔT = 70K	Tn (Nm)	Is/In	Ts/Tn	Tmax / Tn	Kgm²	Kg	(rpm)	50	75	100	50	75	100	I_n (A)
IV Pole - 1800 min⁻¹															W21 Line - Basic design	
63	0.14	0.12	0.81	3.5	1.9	2.1	0.00034	7	1660	52.0	58.0	61.0	0.52	0.65	0.75	0.402
63	0.21	0.19	1.2	3.4	2	2.1	0.00039	7	1650	53.0	57.0	60.0	0.52	0.66	0.76	0.604
71	0.29	0.26	1.7	3.5	1.7	1.8	0.00039	9	1600	52.0	56.0	57.0	0.53	0.67	0.77	0.867
71	0.42	0.37	2.5	3.7	2	2	0.00056	10	1620	60.0	63.0	65.0	0.53	0.67	0.76	1.1
80	0.62	0.55	3.5	4.7	2	2.2	0.0019	13	1700	64.0	68.5	70.0	0.61	0.75	0.85	1.4
80	0.85	0.75	4.8	5.0	2.2	2.2	0.0023	14	1685	70.0	73.0	73.0	0.61	0.75	0.84	1.8
90S	1.3	1.15	7.3	5.6	2.1	2.2	0.0039	18	1705	75.0	76.0	77.0	0.65	0.77	0.83	2.7
90L	1.8	1.6	10	5.5	2	2.1	0.0048	20	1690	78.5	79.0	79.0	0.68	0.79	0.86	3.5
100L	2.6	2.3	15	5.6	2	2.3	0.0065	26	1695	81.0	81.5	81.5	0.70	0.79	0.85	4.9
100L	3.6	3.2	20	6.0	2.3	2.5	0.0084	30	1680	81.5	82.5	82.2	0.67	0.79	0.84	6.8
112M	4.8	4.2	27	6.2	1.7	2.2	0.0147	42	1725	85.0	85.6	85.5	0.74	0.83	0.86	8.6
132S	6.3	5.6	35	6.5	1.7	2.3	0.0349	51	1740	86.0	86.7	86.5	0.72	0.82	0.87	11.0
132M	8.5	7.5	46	6.7	1.7	2.6	0.0465	59	1750	86.5	87.5	87.5	0.72	0.83	0.87	14.7
132M	10.5	9.3	57	7.5	1.8	2.6	0.0582	71	1750	87.8	88.5	88.2	0.72	0.82	0.87	18.0
160M	12.5	11	68	6.0	2.2	2.3	0.07528	102	1750	87.5	89.0	89.0	0.70	0.80	0.84	21.9
160L	17	15	93	5.8	2.1	2.2	0.105	121	1755	89.0	90.3	90.0	0.73	0.82	0.85	29.2
180M	21	18.5	114	7.0	2.3	2.6	0.161	172	1765	90.0	91.0	91.0	0.73	0.82	0.85	35.6
180L	25	20	136	7.0	2.6	2.6	0.188	174	1760	90.8	92.0	91.5	0.74	0.83	0.86	41.7
200L	36	30	195	6.7	2.2	2.2	0.303	233	1765	91.5	92.2	92.0	0.76	0.83	0.86	59.7
225S/M	42	35	226	7.2	2.1	2.4	0.630	352	1775	90.8	92.1	92.5	0.79	0.86	0.89	66.9
225S/M	53	45	286	7.0	2.1	2.5	0.770	379	1770	91.3	92.9	93.4	0.80	0.87	0.89	83.7
250S/M	63	55	339	7.0	2.2	2.4	0.980	450	1775	92.7	93.4	93.5	0.83	0.88	0.91	97.2
280S/M	85	70	456	6.7	1.9	2.2	2.3	720	1780	92.2	93.5	94.2	0.85	0.89	0.90	132
280S/M	105	90	563	7.1	2.2	2.3	2.6	736	1780	91.9	93.1	94.0	0.84	0.88	0.90	163
315S/M	125	110	671	7.1	2.1	2.4	2.8	862	1780	92.0	93.6	94.0	0.80	0.86	0.88	198
315S/M	151	130	810	7.3	2.3	2.4	3.8	1006	1780	93.8	94.8	95.0	0.81	0.87	0.89	234
315S/M	185	160	993	7.0	2.2	2.5	3.8	1016	1780	93.1	95.0	95.3	0.78	0.85	0.88	289
315B	230	200	1231	6.8	1.6	2.5	4.0	1240	1785	94.2	95.0	95.0	0.73	0.81	0.83	383
315B	290	255	1556	6.2	1.5	2.2	5.2	1330	1780	95.0	95.4	95.2	0.78	0.84	0.86	465
315B	370	325	1985	7.4	1.7	2.4	5.7	1560	1780	94.8	95.3	95.3	0.76	0.83	0.85	599
355M/L	230	200	1231	6.6	2.1	2	7.5	1502	1785	94.0	95.0	95.2	0.84	0.87	0.89	356
355M/L	290	255	1552	6.9	2	2.3	8.4	1608	1785	94.5	95.2	95.6	0.83	0.88	0.89	447
355M/L	370	325	1980	6.7	2	2.2	10.3	1854	1785	94.9	95.8	96.0	0.83	0.88	0.89	568
IV Pole - 1800 min⁻¹																W21 Line - High Output
132M/L	12.5	11	68	7.5	2.2	2.5	0.0698	83	1750	87.5	88.4	88.0	0.75	0.85	0.89	20.9
160M	17	15	93	5.8	2.1	2.2	0.105	121	1755	89.0	90.3	90.0	0.73	0.82	0.85	29.2
160L	21	19	115	6.0	2.2	2.2	0.115	130	1750	90.0	90.5	90.0	0.72	0.81	0.85	36.0
180M	25	20	136	7.0	2.6	2.6	0.188	174	1760	90.8	92.0	91.5	0.74	0.83	0.86	41.7
180L	36	30	196	7.2	2.7	2.7	0.215	186	1755	90.5	90.8	91.0	0.67	0.78	0.84	61.8
200M	36	30	195	6.7	2.2	2.2	0.303	233	1765	91.5	92.2	92.0	0.76	0.83	0.86	59.7
225S/M	63	55	339	7.0	2.2	2.4	0.980	426	1775	92.7	93.4	93.5	0.83	0.88	0.91	97.2
250S/M	85	70	457	7.2	2.2	2.4	1.2	488	1775	92.0	93.0	93.5	0.81	0.86	0.89	134
280S/M	125	110	671	7.1	2.1	2.4	2.8	796	1780	92.0	93.6	94.0	0.80	0.86	0.88	198
280S/M	151	130	810	7.5	2.1	2.4	3.4	881	1780	92.0	93.5	93.5	0.83	0.87	0.89	238
315S/M	230	200	1234	6.7	2.1	2.3	3.8	1015	1780	94.5	95.0	95.4	0.78	0.85	0.86	368
IV Pole - 1800 min⁻¹															BF Line	
BF8 315L	175	150	938	6.8	2.0	2.5	2.6	1050	1782	93.8	94.9	95.2	0.74	0.82	0.86	280
BF8 315L	220	190	1180	6.9	2.1	2.5	2.6	1150	1781	93.8	94.9	95.2	0.73	0.81	0.85	357
BF8 315L	275	240	1474	7.5	2.5	2.5	3.7	1250	1782	94.8	95.7	95.9	0.75	0.83	0.86	438
BF6 355L	275	240	1471	6.7	2.0	2.3	5.3	1450	1786	94.2	95.4	95.9	0.74	0.82	0.85	443
BF6 355L	305	265	1631	6.9	2.1	2.4	5.9	1450	1786	94.5	95.7	96.1	0.72	0.82	0.85	490
BF6 355L	345	300	1845	6.9	2.1	2.4	6.6	1650	1786	94.9	95.9	96.3	0.75	0.82	0.85	553
BF6 355L	390	340	2084	7.4	2.6	2.6	7.4	1850	1787	96.0	97.0	96.4	0.73	0.81	0.85	625
BF6 355J	440	385	2353	7.0	2.5	2.5	8.7	2100	1786	95.4	96.2	96.5	0.78	0.84	0.87	688
BF6 355J	495	435	2647	7.1	2.4	2.4	9.8	2250	1786	95.6	96.4	96.7	0.76	0.84	0.87	772
BF6 400L	495	435	2644	6.7	1.6	2.6	12.7	2500	1788	96.0	96.5	96.9	0.80	0.85	0.87	770
BF6 400L	550	485	2938	6.7	1.6	2.6	13.1	2700	1788	96.3	96.8	96.9	0.79	0.85	0.87	856
BF6 400J (2)	615	540	3285	6.8	1.7	2.5	13.8	2750	1788	96.4	96.9	97.0	0.78	0.85	0.87	956
BF6 400J (2)	690	605	3685	7.5	2.1	2.8	15.8	2950	1788	96.3	96.8	97.0	0.75	0.83	0.87	1073
BF6 450H (2)	780	685	4161	6.9	2.0	2.7	20.1	4100	1790	95.8	96.7	97.1	0.78	0.85	0.87	1212
BF6 450H (2)	880	775	4694	7.0	2.0	2.9	22.6	4600	1790	96.1	96.9	97.2	0.78	0.85	0.87	1365
BF6 450H (1)(3)	990	870	5281	7.0	1.2	2.0	25.1	5400	1790	96.4	97.0	97.2	0.83	0.86	0.87	1536
BF6 500K (1)(3)	1100	970	5867	7.5	1.7	2.3	50.6	5700	1790	96.2	96.9	97.1	0.83	0.86	0.87	1709
BF6 500K (1)(3)	1230	1080	6561	7.5	1.7	2.3	59.8	5900	1790	96.4	97.0	97.2	0.84	0.87	0.87	1909
BF6 500H (1)(3)	1375	1210	Please refer to us													
BF6 500H (1)(3)	1540	1355														

(1) Copper bar rotor (2) Special Terminal box (3) Special Oversized Terminal box

Tn = Full load torque Is/In = Locked rotor current Tmax/Tn = Breakdown torque In = Full load current Ts/Tn = Locked rotor torque

VSD Operation:
- For VSD, with quadratic torque application load, please consider maximum output related to the Dq=70K column although considering temperature rise 90K. (Valid for frame sizes 400 and below. For frame sizes 450 and 500, please refer to us)
- For applications with constant load torque, please contact WEG.

Notes:
- All values are according to IEC 60034-1 tolerances.
- This data can be changed without prior notice.

Safe Areas Low Voltage Motors - Cast Iron Frame
W21 and BF Lines

IEC Frame	Output ΔT = 90K	Output ΔT = 70K	Full load torque Tn (Nm)	Locked rotor current Is/In	Locked rotor torque Ts/Tn	Breakdown torque Tmax / Tn	Inertia J Kgm²	Weight Kg	Rated speed (rpm)	380 V / 50 Hz % of full load Efficiency η 50	Efficiency η 75	Efficiency η 100	Power Factor (Cos φ) 50	Power Factor (Cos φ) 75	Power Factor (Cos φ) 100	Full load current I_n (A)
VI Pole - 1000 min-1																W21 Line - Basic design
63	0.12	0.11	1.4	2.6	1.5	1.4	0.00051	7	845	46.2	50.6	47.6	0.52	0.64	0.76	0.504
71	0.18	0.16	2.0	2.5	1.3	1.3	0.00057	10	855	58.9	62.6	59.4	0.51	0.63	0.73	0.631
71	0.25	0.22	2.7	2.9	2.0	1.9	0.00091	11	890	61.3	66.1	65.6	0.42	0.53	0.62	0.934
80	0.37	0.33	4.0	3.6	1.5	1.5	0.00190	13	890	67.8	71.7	69.1	0.54	0.69	0.80	1.0
80	0.55	0.49	5.9	3.9	1.5	1.4	0.00294	15	885	70.0	70.7	66.5	0.58	0.73	0.83	1.5
90S	0.75	0.66	8.0	4.2	1.6	1.8	0.00448	19	895	70.0	72.0	72.0	0.61	0.75	0.83	1.9
90L	1.1	0.97	11	4.8	2.4	2.3	0.00616	22	915	73.2	76.4	75.6	0.52	0.67	0.77	2.9
100L	1.5	1.3	16	4.1	1.7	1.9	0.0090	26	900	73.6	78.5	79.0	0.57	0.70	0.77	3.7
112M	2.2	1.9	23	4.7	1.9	2.1	0.0150	37	910	76.9	81.9	83.3	0.60	0.72	0.78	5.1
132S	3	2.6	30	4.9	1.5	1.7	0.0310	47	945	82.6	85.3	85.3	0.64	0.75	0.80	6.7
132M	4	3.5	40	5.8	2.0	2.1	0.0446	57	960	87.5	88.9	88.4	0.61	0.73	0.78	8.8
132M	5.5	4.9	55	6.4	2.4	2.5	0.0581	71	960	83.8	85.0	84.2	0.56	0.69	0.75	13.2
160M	7.5	6.6	75	5.7	1.9	2.2	0.108	100	960	86.0	86.5	86.0	0.69	0.80	0.85	15.6
160L	9.2	8.1	92	6.0	1.8	2.3	0.129	115	960	87.0	87.0	86.5	0.68	0.79	0.84	19.2
160L	11	9.7	109	6.0	2.0	2.3	0.158	125	960	88.0	88.0	87.5	0.70	0.80	0.85	22.5
180L	15	13.2	148	7.5	2.0	2.4	0.262	163	970	88.0	88.5	88.5	0.80	0.86	0.89	28.9
200L	18.5	15	181	6.0	1.9	2.3	0.341	213	975	89.5	90.0	90.0	0.69	0.80	0.84	37.2
200L	22	18.5	217	6.0	2.1	2.2	0.413	228	970	89.6	91.0	91.2	0.74	0.82	0.85	43.1
225S/M	30	25	292	7.2	2.4	2.5	0.988	370	980	91.0	91.8	91.6	0.80	0.86	0.88	56.5
250S/M	37	30	361	7.5	2.5	2.4	1.22	429	980	90.5	92.5	92.4	0.80	0.86	0.88	69.1
280S/M	45	35	436	6.8	2.2	2.4	2.30	603	985	91.0	92.3	92.6	0.72	0.81	0.85	86.9
280S/M	55	45	533	6.5	2.1	2.3	2.64	641	985	92.0	93.2	93.4	0.74	0.84	0.87	103
315S/M	75	65	727	6.7	2.1	2.3	3.45	788	985	92.0	93.5	93.5	0.74	0.82	0.86	142
315S/M	90	75	873	6.3	1.9	2.1	3.68	819	985	92.8	93.9	93.6	0.75	0.83	0.86	170
315S/M	110	95	1066	6.4	2.1	2.2	5.29	994	985	93.6	94.3	94.3	0.74	0.82	0.85	208
315B	160	140	1543	7.0	1.7	2.2	7.10	1361	990	94.0	94.9	94.7	0.72	0.81	0.84	306
315B	200	175	1929	6.6	1.8	2.3	8.60	1467	990	95.1	95.3	94.9	0.75	0.82	0.85	377
315B	250	220	2412	6.8	1.9	2.4	10.7	1323	990	95.4	95.6	95.1	0.77	0.84	0.87	459
315B	280	245	2715	7.4	1.9	2.4	11.5	1500	985	95.4	95.6	95.2	0.75	0.83	0.86	520
355M/L	160	140	1543	6.2	1.7	1.9	9.53	1527	990	93.5	95.2	95.2	0.73	0.80	0.84	304
355M/L	200	175	1929	6.3	1.9	2.1	12.4	1709	990	94.0	94.7	94.8	0.74	0.81	0.83	386
355M/L	250	220	2399	6.1	2.0	2.0	14.8	1878	995	94.3	95.2	95.5	0.74	0.81	0.83	479
355M/L	280	245	2715	6.0	1.9	2.0	14.8	1887	985	94.7	95.3	95.4	0.73	0.80	0.81	551
355M/L	315	275	3054	6.0	1.7	1.7	15.5	1944	985	94.8	96.0	95.8	0.73	0.80	0.82	609
VI Pole - 1000 min-1																W21 Line - High Output
200M	18.5	16.3	181	6.0	1.9	2.3	0.3408	213	975	89.5	90.0	90.0	0.69	0.80	0.84	37.2
200M	22	19.4	217	6.0	2.1	2.2	0.4126	228	970	89.6	91.0	91.2	0.74	0.82	0.85	43.1
250S/M	45	35	439	8.0	2.5	2.5	1.55	483	980	91.5	92.3	92.5	0.82	0.87	0.89	83.0
280S/M	75	65	727	6.7	2.1	2.3	3.45	726	985	92.0	93.5	93.5	0.74	0.82	0.86	142
VI Pole - 1000 min-1																W21 Line - High Output
BF8 315L	110	95	1063	7.4	2.6	2.9	4.3	1050	988	92.8	94.1	94.4	0.71	0.80	0.83	213
BF8 315L	132	115	1276	7.4	2.5	2.6	4.9	1150	988	93.2	94.4	94.6	0.71	0.80	0.83	255
BF8 315L	160	140	1547	7.4	2.4	2.5	6.2	1200	988	93.9	94.8	94.8	0.73	0.81	0.84	305
BF8 315L	200	175	1935	7.3	2.4	2.5	7.6	1350	987	94.4	95.2	95.1	0.74	0.81	0.84	380
BF6 355L	200	175	1927	7.0	1.9	2.2	8.7	1550	991	94.0	95.2	95.4	0.73	0.80	0.83	384
BF6 355L	250	220	2409	7.0	1.9	2.1	10.4	1700	991	94.6	95.6	95.8	0.72	0.80	0.83	478
BF6 355L	280	245	2698	7.2	2.3	2.4	11.8	1950	991	94.8	95.8	96.0	0.72	0.80	0.84	528
BF6 355L	315	275	3039	7.0	2.3	2.5	13.1	2150	990	95.1	95.9	96.0	0.74	0.82	0.85	587
BF6 355J	355	310	3424	7.0	2.4	2.5	14.8	2450	990	95.3	96.0	96.1	0.74	0.82	0.85	660
BF6 400L	400	350	3843	7.2	2.0	2.6	21.4	2400	994	95.4	96.2	96.5	0.73	0.81	0.84	750
BF6 400L	450	395	4319	7.3	2.4	2.7	25.0	2800	995	95.2	96.2	96.5	0.71	0.80	0.84	843
BF6 400J	500	440	4804	7.4	2.4	2.6	28.1	3000	994	95.7	96.4	96.6	0.77	0.83	0.85	925
BF6 450H (2)	560	490	5380	5.8	1.1	2.6	42.9	4200	994	95.9	96.7	97.0	0.79	0.85	0.86	1020
BF6 450H (2)	630	555	6053	5.5	1.0	2.2	47.4	4650	994	96.1	96.8	97.0	0.80	0.85	0.86	1147
BF6 450H (1)(2)	710	625	6821	6.0	1.2	2.2	52.9	5050	994	96.2	96.9	97.2	0.78	0.84	0.86	1290
BF6 500K (1)(3)	800	705	7671	5.3	0.7	2.5	70.5	8100	996	95.8	96.8	97.2	0.81	0.86	0.87	1437
BF6 500K (1)(3)	900	790	8630	5.5	0.7	2.7	70.5	8100	996	95.6	96.7	97.1	0.80	0.85	0.87	1619
BF6 500K (1)(3)	1000	880	Please refer to us													

(1) Copper bar rotor (2) Special Terminal box (3) Special Oversized Terminal box.
VSD Operation:
- For VSD, with quadratic torque application load, please consider maximum output related to the Dq=70K column although considering temperature rise 90K. (Valid for frame sizes 400 and below. For frame sizes 450 and 500, please refer to us)
- For applications with constant load torque, please contact WEG.

Notes:
- All values are according to IEC 60034-1 tolerances.
- This data can be changed without prior notice.

Safe Areas Low Voltage Motors - Cast Iron Frame
W21 and BF Lines

IEC Frame	Output		Full load torque Tn (Nm)	Locked rotor current Is/In	Locked rotor torque Ts/Tn	Breakdown torque Tmax / Tn	Inertia J Kgm²	Weight Kg	Rated speed (rpm)	440 V / 60 Hz						
										% of full load						Full load current I_n (A)
										Efficiency η			Power Factor (Cos φ)			
	ΔT = 90K	ΔT = 70K								50	75	100	50	75	100	
VI Pole - 1200 min⁻¹															W21 Line - Basic design	
63	0.14	0.12	1.3	2.6	1.5	1.5	0.00051	7	1030	50.7	54.5	50.9	0.50	0.62	0.74	0.488
71	0.21	0.19	1.9	2.5	1.3	1.4	0.00057	10	1055	64.1	66.8	63.8	0.50	0.62	0.71	0.608
71	0.29	0.26	2.5	2.9	2.0	2.0	0.00091	11	1090	66.4	70.5	69.6	0.41	0.52	0.61	0.896
80	0.42	0.37	3.7	3.6	1.7	1.7	0.00190	13	1090	71.5	75.1	73.3	0.53	0.67	0.78	0.964
80	0.62	0.55	5.4	3.9	1.7	1.6	0.00294	15	1090	72.5	73.7	70.5	0.56	0.71	0.80	1.4
90S	0.85	0.75	7.4	4.2	1.8	1.9	0.00448	19	1100	70.0	72.0	72.0	0.61	0.74	0.82	1.9
90L	1.3	1.15	11	4.8	2.4	2.5	0.00616	22	1110	75.9	79.1	79.1	0.54	0.68	0.78	2.8
100L	1.8	1.6	16	4.1	1.6	1.9	0.0090	26	1095	76.1	81.0	82.0	0.59	0.71	0.77	3.7
112M	2.6	2.3	23	4.7	1.7	1.9	0.0150	37	1095	77.8	83.5	85.8	0.64	0.75	0.78	5.1
132S	3.6	3.2	30	4.9	1.3	1.6	0.0310	47	1140	84.3	87.0	87.3	0.66	0.77	0.81	6.7
132M	4.8	4.2	40	5.8	1.7	2.1	0.0446	57	1155	88.6	90.2	89.9	0.64	0.75	0.79	8.9
132M	6.3	5.6	52	6.4	2.2	2.5	0.0581	71	1155	85.2	86.2	85.5	0.58	0.70	0.76	12.7
160M	8.5	7.5	70	5.7	2.0	2.4	0.108	100	1160	86.5	87.5	87.0	0.70	0.80	0.85	15.1
160L				6.0	1.8	2.4	0.129	115	1160	88.0	88.0	87.5	0.69	0.80	0.84	18.7
160L	12.5	11.0	103	6.0	2.1	2.4	0.158	125	1160	88.5	89.0	88.5	0.70	0.80	0.85	21.8
180L	17	15.0	139	7.5	1.9	2.5	0.262	163	1170	88.5	89.0	89.2	0.80	0.87	0.88	28.4
200L	21	19	171	6.0	2.0	2.3	0.341	213	1175	90.0	90.5	90.5	0.70	0.80	0.84	36.2
200L	25	22.0	204	6.0	2.1	2.2	0.413	228	1170	89.6	91.0	91.2	0.75	0.82	0.85	42.3
225S/M	36	30	291	7.2	2.4	2.4	0.988	370	1180	91.0	91.8	91.6	0.82	0.87	0.89	57.9
250S/M	42	35	340	7.5	2.5	2.4	1.22	429	1180	90.5	92.4	92.4	0.81	0.86	0.88	67.8
280S/M	53	45	427	6.8	2.2	2.4	2.30	603	1185	91.0	92.3	92.6	0.74	0.82	0.85	88.4
280S/M	63	55	508	6.5	2.1	2.3	2.64	641	1185	92.0	93.2	93.4	0.75	0.84	0.87	102
315S/M	85	70	685	6.7	2.1	2.3	3.45	788	1185	92.0	93.5	93.5	0.75	0.83	0.86	139
315S/M	105	90	850	6.3	1.9	2.1	3.68	819	1180	92.8	93.9	93.6	0.76	0.83	0.86	171
315S/M	125	110	1007	6.4	2.1	2.2	5.29	994	1185	93.5	94.4	94.4	0.75	0.82	0.85	204
315B	185	160	1491	7.0	1.6	2.2	7.10	1361	1185	94.0	94.7	94.7	0.74	0.82	0.85	302
315B	230	200	1846	6.6	1.7	2.2	8.60	1467	1190	95.1	95.3	95.0	0.76	0.83	0.86	369
315B	290	255	2337	6.8	1.8	2.3	10.7	1323	1185	95.4	95.7	95.1	0.78	0.85	0.87	460
315B	315	275	2539	7.4	1.8	2.3	11.5	1500	1185	95.5	95.7	95.5	0.76	0.83	0.86	503
355M/L	185	160	1485	6.2	1.7	1.9	9.53	1527	1190	93.5	95.0	95.2	0.74	0.81	0.84	304
355M/L	230	200	1846	6.3	1.9	2.1	12.4	1709	1190	93.9	94.6	94.7	0.75	0.81	0.83	384
355M/L	290	255	2327	6.1	2.0	2.0	14.8	1878	1190	94.2	95.1	95.5	0.75	0.82	0.83	480
355M/L	315	275	2539	6.0	1.9	1.9	14.8	1887	1185	94.6	95.3	95.4	0.75	0.81	0.82	528
355M/L	370	325	2982	6.0	1.8	1.7	15.5	1944	1185	94.8	96.0	95.9	0.75	0.81	0.82	617
VI Pole - 1200 min⁻¹															W21 Line - High Output	
200M	21	18.5	171	6.0	2.0	2.3	0.3408	213	1175	90.0	90.5	90.5	0.70	0.80	0.84	36.2
200M	25	22.0	204	6.0	2.1	2.2	0.4126	228	1170	89.6	91.0	91.2	0.75	0.82	0.85	42.3
250S/M	53	45	429	8.0	2.5	2.5	1.55	483	1180	91.0	92.1	92.5	0.83	0.88	0.89	84.5
280S/M	85	70	685	6.7	2.1	2.3	3.45	726	1185	92.0	93.5	93.5	0.75	0.83	0.86	139
VI Pole - 1200 min⁻¹															BF Line	
BF8 315L	120	105	967	7.4	2.6	2.9	4.3	1050	1186	92.7	94.0	94.3	0.71	0.80	0.83	201
BF8 315L	145	125	1168	7.4	2.5	2.6	4.9	1150	1186	93.1	94.3	94.5	0.71	0.80	0.83	243
BF8 315L	175	150	1410	7.4	2.4	2.5	6.2	1200	1186	93.8	94.7	94.7	0.73	0.81	0.84	289
BF8 315L	220	190	1774	7.3	2.4	2.5	7.6	1350	1184	94.3	95.1	95.0	0.74	0.81	0.84	362
BF6 355L	220	190	1767	7.0	1.9	2.2	8.7	1550	1189	93.9	95.1	95.3	0.73	0.80	0.83	365
BF6 355L	275	240	2208	7.0	1.9	2.1	10.4	1700	1189	94.5	95.5	95.7	0.72	0.80	0.83	454
BF6 355L	305	265	2449	7.2	2.3	2.4	11.8	1950	1189	94.7	95.7	95.9	0.72	0.80	0.84	497
BF6 355L	345	300	2773	7.0	2.3	2.5	13.1	2150	1188	95.0	95.8	95.9	0.74	0.82	0.85	555
BF6 355J	390	340	3135	7.0	2.4	2.5	14.8	2450	1188	95.2	95.9	96.0	0.74	0.82	0.85	627
BF6 400L	440	385	3523	7.2	2.0	2.6	21.4	2400	1193	95.3	96.1	96.4	0.73	0.81	0.84	713
BF6 400J	495	435	3959	7.3	2.4	2.7	25.0	2800	1194	95.1	96.1	96.4	0.71	0.80	0.84	802
BF6 400J	550	485	4404	7.4	2.4	2.6	28.1	3000	1193	95.6	96.3	96.5	0.77	0.83	0.85	880
BF6 450H (2)	615	540	4924	7.4	2.4	2.6	28.1	3000	1193	95.8	96.6	96.9	0.77	0.83	0.85	980
BF6 450H (2)	690	605	5524	5.8	1.1	2.6	42.9	4200	1193	96.0	96.7	96.9	0.79	0.85	0.86	1086
BF6 450H (1)(2)	780	685	6245	5.5	1.0	2.6	42.9	4650	1193	96.1	96.8	97.1	0.80	0.85	0.86	1226
BF6 500K (1)(3)	880	775	7046	5.5	1.0	2.2	47.4	4650	1193	95.7	96.7	97.1	0.80	0.85	0.86	1383
BF6 500K (1)(3)	990	870	7926	6.0	1.2	2.2	52.9	5050	1193	95.5	96.6	97.0	0.78	0.84	0.86	1557
BF6 500K (1)(3)	1100	970	Please refer to us													

Safe Areas Low Voltage Motors - Cast Iron Frame
W21 and BF Lines

IEC Frame	Output		Full load torque Tn (Nm)	Locked rotor current Is/In	Locked rotor torque Ts/Tn	Breakdown torque Tmax / Tn	Inertia J Kgm²	Weight Kg	Rated speed (rpm)	380 V / 50 Hz						
										% of full load						Full load current I_n (A)
										Efficiency η			Power Factor (Cos φ)			
	ΔT = 90K	ΔT = 70K								50	75	100	50	75	100	
VIII Pole - 750 min⁻¹																W21 Line - Basic design
71	0.12	0.11	1.8	2.2	1.7	1.7	0.00079	11	650	41.0	47.1	47.6	0.39	0.48	0.57	0.672
80	0.18	0.16	2.5	2.8	1.9	2.1	0.00208	13	690	40.7	47.7	50.6	0.47	0.57	0.66	0.819
80	0.25	0.22	3.5	3.5	2.0	1.9	0.00277	14	690	49.0	55.6	57.2	0.45	0.56	0.65	1.0
90S	0.37	0.33	5.2	3.0	1.6	1.6	0.00392	18	680	54.4	59.0	58.3	0.48	0.60	0.69	1.4
90L	0.55	0.49	7.9	3.3	1.6	1.8	0.00561	21	665	61.7	62.0	60.0	0.47	0.60	0.70	2.0
100L	0.75	0.66	10	3.5	1.5	2.1	0.00785	24	695	65.6	69.0	68.0	0.46	0.58	0.66	2.5
100L	1.1	0.97	15	4.0	1.4	2.0	0.0118	29	690	72.1	73.6	70.8	0.50	0.62	0.70	3.4
112M	1.5	1.3	21	4.2	1.9	1.9	0.0178	40	690	75.9	76.2	73.2	0.52	0.65	0.73	4.3
132S	2.2	1.9	30	6.1	2.1	2.4	0.0602	61	705	77.1	78.3	76.7	0.60	0.73	0.80	5.4
132M	3	2.6	41	6.1	1.9	2.2	0.0728	73	705	79.7	80.5	78.6	0.60	0.73	0.80	7.2
160M	4	3.5	53	4.7	2.0	2.1	0.101	97	720	81.0	83.0	82.0	0.54	0.67	0.75	9.9
160M	5.5	4.9	73	4.8	2.0	2.1	0.122	107	720	82.0	84.0	83.0	0.54	0.67	0.74	13.6
160L	7.5	6.6	100	4.7	2.0	2.0	0.151	122	715	84.0	85.0	85.0	0.56	0.69	0.76	17.6
180M	9.2	8.1	121	6.7	2.0	2.6	0.234	163	725	84.0	86.1	85.5	0.69	0.79	0.84	19.5
180L	11	9.7	146	6.8	2.0	2.2	0.276	175	720	87.5	88.3	87.8	0.71	0.81	0.85	22.4
200L	15	13.2	198	4.6	1.8	1.9	0.377	217	725	87.5	88.9	88.9	0.61	0.72	0.77	33.3
225S/M	18.5	15	242	6.9	1.9	2.5	0.847	343	730	88.8	90.0	89.8	0.75	0.83	0.86	36.4
225S/M	22	18.5	288	7.5	2.0	2.4	0.988	364	730	89.4	90.9	90.5	0.76	0.84	0.86	42.9
250S/M	30	25	392	7.9	2.0	2.6	1.22	428	730	90.0	91.3	91.3	0.73	0.81	0.85	58.7
280S/M	37	30	481	6.5	1.7	2.1	2.30	596	735	91.0	92.2	92.1	0.70	0.79	0.82	74.4
280S/M	45	35	585	6.5	1.8	2.2	2.64	635	735	91.0	92.2	92.0	0.70	0.77	0.82	90.6
315S/M	55	45	715	6.5	1.7	2.0	3.10	751	735	91.6	93.2	92.8	0.72	0.80	0.83	108
315S/M	75	65	974	6.6	1.7	2.0	4.37	872	735	92.4	93.3	93.3	0.70	0.80	0.83	147
315S/M	90	75	1169	6.8	1.9	2.1	5.29	1021	735	92.9	93.9	94.0	0.73	0.81	0.84	173
315B	132	115	1704	6.9	1.7	2.3	7.77	1399	740	94.6	94.8	94.3	0.68	0.77	0.81	263
315B	160	140	2065	7.3	1.8	2.5	9.75	1534	740	93.6	94.9	94.6	0.66	0.75	0.79	325
315B	200	175	2599	6.5	1.4	2.1	11.5	1750	735	94.3	94.7	94.7	0.73	0.81	0.83	387
355M/L	110	95	1420	6.4	1.3	2.0	11.9	1390	740	93.0	94.2	94.5	0.66	0.77	0.82	216
355M/L	132	115	1704	6.5	1.4	2.0	13.2	1552	740	93.5	94.6	94.8	0.66	0.75	0.81	261
355M/L	160	140	2065	6.6	1.4	2.0	16.3	1537	740	93.8	94.8	94.8	0.68	0.77	0.81	317
355M/L	200	175	2581	6.8	1.4	1.9	19.5	1704	740	93.8	94.8	95.1	0.65	0.75	0.81	394
VIII Pole - 750 min⁻¹																W21 Line - High Output
160M	7.5	6.6	100	4.7	2.0	2.0	0.151	122	715	84.0	85.0	85.0	0.56	0.69	0.76	17.6
225S/M	30	25	392	7.9	2.0	2.6	1.22	440	730	90.0	91.3	91.3	0.73	0.81	0.85	58.7
250S/M	37	30	484	8.2	2.1	2.5	1.55	479	730	89.5	91.5	91.0	0.72	0.82	0.86	71.8
280S/M	55	45	715	6.5	1.7	2.0	3.10	680	735	91.6	93.2	92.8	0.72	0.80	0.83	108
315S/M	110	95	1429	7.0	1.6	2.0	5.63	1032	735	93.0	94.1	94.8	0.66	0.75	0.80	220
VIII Pole - 750 min⁻¹																BF Line
BF8 315L	90	75	1161	7.1	2.8	2.9	5.5	950	740	92.8	93.9	94.0	0.64	0.74	0.79	184
BF8 315L	110	95	1420	7.1	2.8	2.9	6.7	1100	740	93.3	94.0	94.0	0.66	0.75	0.79	225
BF8 315L	132	115	1704	7.0	2.5	2.5	7.9	1250	740	92.9	94.0	94.1	0.67	0.76	0.79	270
BF8 315L	160	140	2065	7.2	2.6	2.6	9.3	1300	740	92.8	94.0	94.2	0.65	0.75	0.79	327
BF6 355L	160	140	2059	6.5	1.7	2.0	12.4	1300	742	94.0	94.9	95.1	0.70	0.78	0.81	316
BF6 355L	200	175	2571	6.5	1.9	2.1	14.6	1500	743	94.3	95.2	95.4	0.68	0.77	0.81	393
BF6 355L	250	220	3213	6.5	2.0	2.2	18.1	1850	743	94.7	95.5	95.6	0.68	0.77	0.81	491
BF6 355J	280	245	3599	6.5	1.9	2.1	21.8	2200	743	95.1	95.8	95.8	0.70	0.78	0.81	548
BF6 400L	315	275	4038	7.0	2.8	2.8	25.7	2250	745	95.6	96.5	96.7	0.68	0.77	0.82	604
BF6 400L	355	310	4551	7.0	2.9	2.9	28.8	2500	745	94.9	95.8	96.1	0.66	0.76	0.81	693
BF6 400L	400	350	5128	7.0	3.1	3.1	31.1	2750	745	95.2	95.9	96.1	0.67	0.76	0.81	781
BF6 400J (1)	450	395	5761	7.5	3.4	3.4	37.7	3350	746	95.6	96.3	96.5	0.68	0.78	0.82	864
BF6 450H (1)(2)	500	440	6401	7.2	2.1	2.5	65.4	4600	746	95.0	96.0	96.3	0.73	0.80	0.82	962
BF6 450H (1)(2)	560	490	7169	7.2	2.1	2.4	73.5	5100	746	95.0	96.0	96.3	0.74	0.80	0.82	1077
BF6 500K (1)(2)	630	555	8054	6.0	0.8	2.5	86.0	5800	747	95.6	96.4	96.6	0.73	0.80	0.83	1194
BF6 500K (1)(2)	710	625	9077	6.0	0.8	2.5	96.6	6500	747	95.6	96.4	96.6	0.73	0.80	0.83	1345
BF6 500K (1)(3)	800	705	10228	6.0	0.8	2.5	111.1	6600	747	95.6	96.4	96.6	0.73	0.80	0.83	1516
BF6 500K (1)(3)	900	790	Please refer to us													

(1) Copper bar rotor
(2) Special Terminal box
(3) Special Oversized Terminal box.
VSD Operation:
- For VSD, with quadratic torque application load, please consider maximum output related to the Dq=70K column although considering temperature rise 90K. (Valid for frame sizes 400 and below. For frame sizes 450 and 500, please refer to us)
- For applications with constant load torque, please contact WEG.

Notes:
- All values are according to IEC 60034-1 tolerances.
- This data can be changed without prior notice.

Safe Areas Low Voltage Motors - Cast Iron Frame
W21 and BF Lines

IEC Frame	Output		Full load torque Tn (Nm)	Locked rotor current Is/In	Locked rotor torque Ts/Tn	Breakdown torque Tmax / Tn	Inertia J Kgm²	Weight Kg	Rated speed (rpm)	440 V / 60 Hz						
										% of full load						Full load current I_n (A)
										Efficiency η			Power Factor (Cos φ)			
	ΔT = 90K	ΔT = 70K								50	75	100	50	75	100	
VIII Pole - 990 min⁻¹															W21 Line - Basic design	
71	0.14	0.12	1.7	2.2	1.6	1.7	0.00079	11	795	45.7	51.5	51.6	0.37	0.46	0.55	0.647
80	0.21	0.19	2.4	2.8	2.0	2.3	0.00208	13	840	44.5	51.1	54.0	0.45	0.55	0.64	0.797
80	0.29	0.26	3.3	3.5	2.1	2.1	0.00277	14	840	53.0	59.2	60.8	0.44	0.55	0.64	0.978
90S	0.42	0.37	4.8	3.0	1.7	1.8	0.00392	18	830	58.2	62.3	61.7	0.46	0.58	0.67	1.3
90L	0.62	0.55	7.3	3.3	1.6	2.0	0.00561	21	815	64.9	66.7	63.4	0.46	0.59	0.68	1.9
100L	0.85	0.75	9.6	3.5	1.4	2.1	0.00785	24	845	68.8	71.8	70.9	0.47	0.58	0.65	2.4
100L	1.3	1.15	15	4.0	1.3	1.9	0.0118	29	840	75.1	75.9	72.9	0.52	0.63	0.70	3.3
112M	1.8	1.6	20	4.2	1.8	1.8	0.0178	40	840	78.8	78.6	75.4	0.55	0.67	0.74	4.2
132S	2.6	2.3	29	6.1	2.0	2.4	0.0602	61	855	78.8	80.0	78.5	0.62	0.74	0.81	5.4
132M	3.6	3.2	40	6.1	1.7	2.1	0.0728	73	850	81.6	82.0	80.0	0.64	0.75	0.81	7.3
160M	4.8	4.2	53	4.7	1.8	2.0	0.101	97	865	82.0	83.5	83.5	0.56	0.69	0.76	9.9
160M	6.3	5.6	69	4.8	1.9	2.1	0.122	107	870	83.0	85.0	84.5	0.54	0.67	0.74	13.2
160L	8.5	7.5	94	4.7	1.9	2.0	0.151	122	865	84.0	86.5	86.0	0.56	0.69	0.76	17.1
180M	10.5	9.3	116	4.7	1.9	2.0	0.151	122	865	84.0	86.5	86.0	0.56	0.69	0.76	17.1
180L	12.5	11	136	6.7	2.0	2.6	0.234	163	875	84.0	86.1	85.5	0.71	0.80	0.84	19.2
200L	17	15	187	6.8	1.9	2.2	0.276	175	870	87.7	88.5	88.0	0.71	0.81	0.85	21.9
225S/M	21	19	229	4.6	1.8	1.9	0.377	217	875	87.5	89.0	89.0	0.62	0.72	0.77	32.6
225S/M	25	20	271	7.5	1.9	2.4	0.988	364	880	89.4	90.9	90.9	0.77	0.84	0.86	42.0
250S/M	36	30	391	7.9	2.0	2.5	1.22	428	880	90.0	91.4	91.6	0.74	0.82	0.85	60.7
280S/M	42	35	453	6.5	1.9	2.0	2.30	596	885	91.0	92.2	92.1	0.71	0.79	0.82	73.0
280S/M	53	45	572	6.5	1.7	2.1	2.64	635	885	91.0	92.5	92.3	0.73	0.78	0.82	91.9
315S/M	63	55	680	6.5	1.7	2.0	3.10	751	885	91.6	93.2	93.0	0.73	0.80	0.83	107
315S/M	85	70	917	6.6	1.7	1.9	4.37	872	885	92.4	93.4	93.4	0.71	0.80	0.83	144
315S/M	105	90	1133	6.8	1.9	2.1	5.29	1021	885	92.8	93.9	94.0	0.73	0.81	0.84	174
315B	151	130	1629	6.9	1.6	2.3	7.77	1399	885	94.7	95.0	94.6	0.70	0.78	0.82	255
315B	185	160	1985	7.3	1.7	2.5	9.75	1534	890	93.8	95.0	94.7	0.67	0.76	0.80	320
315B	230	200	2482	6.5	1.4	2.1	11.5	1750	885	94.5	95.0	94.8	0.74	0.81	0.83	385
355M/L	125	110	1341	6.4	1.3	2.0	11.9	1390	890	93.0	94.2	94.5	0.67	0.78	0.82	212
355M/L	151	130	1620	6.5	1.3	2.0	13.2	1552	890	93.5	94.6	94.8	0.67	0.76	0.81	258
355M/L	185	160	1985	6.6	1.3	2.0	16.3	1537	890	93.8	94.7	94.7	0.69	0.78	0.81	316
355M/L	230	200	2468	6.8	1.4	1.8	19.5	1704	890	93.8	94.8	95.2	0.66	0.76	0.81	391
VIII Pole - 990 min⁻¹															W21 Line - High Output	
160M	8.5	7.5	94	4.7	1.9	2	0.15082	122	865	84	86.5	86	0.56	0.69	0.76	17.1
225S/M	36	30	391	7.9	2.0	2.5	1.22	440	880	90.0	91.4	91.6	0.74	0.82	0.85	60.7
250S/M	42	35	456	8.2	2.0	2.5	1.55	479	880	89.5	91.5	91.0	0.72	0.82	0.86	70
280S/M	63	55	680	6.5	1.7	2.0	3.10	680	885	91.6	93.2	93.0	0.73	0.80	0.83	107
315S/M	125	110	1349	7.0	1.6	2.0	5.63	1032	885	93.0	94.1	94.8	0.68	0.76	0.80	216
VIII Pole - 990 min⁻¹															BF Line	
BF8 315L	95	80	1022	7.1	2.8	2.9	5.5	950	888	92.7	93.8	93.9	0.54	0.64	0.69	192
BF8 315L	120	105	1291	7.1	2.8	2.9	6.7	1100	888	93.2	93.9	93.9	0.56	0.65	0.69	243
BF8 315L	145	125	1559	7.0	2.5	2.5	7.9	1250	888	92.8	93.9	94.0	0.57	0.66	0.69	293
BF6 355L	175	150	1882	7.2	2.6	2.6	9.3	1300	888	92.7	93.9	94.1	0.55	0.65	0.69	354
BF6 355L	175	150	1877	6.5	1.7	2.0	12.4	1300	890	93.9	94.8	95.0	0.60	0.68	0.71	340
BF6 355L	220	190	2356	6.5	1.9	2.1	14.6	1500	892	94.2	95.1	95.3	0.58	0.67	0.71	427
BF6 355J	275	240	2946	6.5	2.0	2.2	18.1	1850	892	94.6	95.4	95.5	0.58	0.67	0.71	532
BF6 400L	305	265	3267	6.5	1.9	2.1	21.8	2200	892	95.0	95.7	95.7	0.60	0.68	0.71	589
BF6 400L	345	300	3685	7.0	2.8	2.8	25.7	2250	894	95.5	96.4	96.6	0.58	0.67	0.72	651
BF6 400L	390	340	4166	7.0	2.9	2.9	28.8	2500	894	94.8	95.7	96.0	0.56	0.66	0.71	751
BF6 400J (1)	440	385	4700	7.0	3.1	3.1	31.1	2750	894	95.1	95.8	96.0	0.57	0.66	0.71	847
BF6 450H (1)(2)	495	435	5281	7.5	3.4	3.4	37.7	3350	895	95.5	96.2	96.4	0.58	0.68	0.72	936
BF6 450H (1)(2)	550	485	5867	7.2	2.1	2.5	65.4	4600	895	94.9	95.9	96.2	0.63	0.70	0.72	1042
BF6 500K (1)(2)	615	540	6561	7.2	2.1	2.4	73.5	5100	895	94.9	95.9	96.2	0.64	0.70	0.72	1165
BF6 500K (1)(2)	690	605	7351	6.0	0.8	2.5	86.0	5800	896	95.5	96.3	96.5	0.63	0.70	0.73	1285
BF6 500K (1)(3)	780	685	8310	6.0	0.8	2.5	96.6	6500	896	95.5	96.3	96.5	0.63	0.70	0.73	1453
BF6 500K (1)(3)	880	775	Please refer to us													

Safe Areas Low Voltage Motors - Cast Iron Frame

Mechanical Data - W21 Range

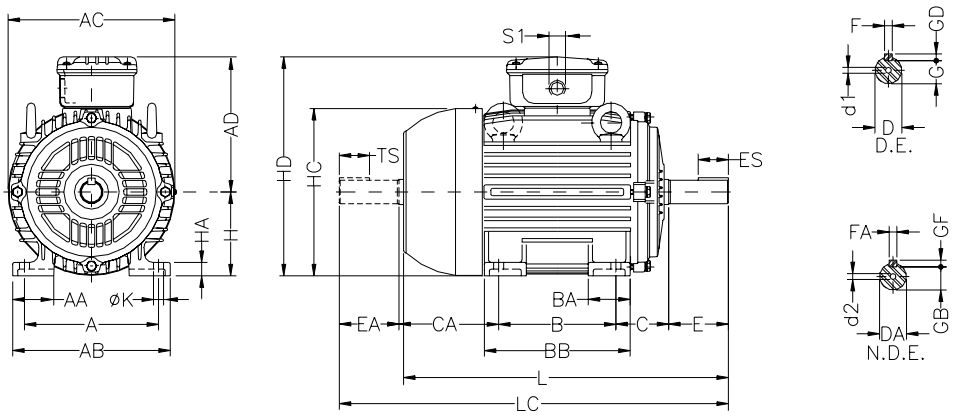

IEC FRAME	A	AA	AB	AC	AD	B	BA	BB	C	CA	SHAFT DIMENSIONS											
											D	E	ES	F	G	GD	DA	EA	TS	FA	GB	GF
63	100	21	116	125	119	80	22	95	40	78	11j6	23	14	4	8.5	4	9j6	20	12	3	7.2	3
71	112	30	132	141	127	90	38	113.5	45	88	14j6	30	18	5	11	5	11j6	23	14	4	8.5	4
80	125	35	149	159	136	100	40	125.5	50	93	19j6	40	28	6	15.5	6	14j6	30	18	5	11	5
90S	140	38	164	179	155	100	42	131	56	104	24j6	50	36	8	20	7	16j6	40	28		13	
90L						125		156														
100L	160	49	188	199	165	140	50	173	63	118	28j6	60	45		24		22j6	50	36	6	18.5	6
112M	190	48	220	222	184			177	70	128							24j6			8	20	7
132S	216	51	248	270	212	140	55	187	89	150	38k6	80	63	10	33	8	28j6	60	45		24	
132M						178		225														
160M	254	64	308	312	255	210	65	254	108	174	42k6	110	80	12	37		42k6	110	80	12	37	8
160L						254		298														
180M	279	80	350	358	275	241	75	294	121	200	48k6			14	42.5	9	48k6			14	42.5	9
180L						279		332														
200M	318	82	385	396	300	267	85		133	222	55m6			16	49	10						
200L						305		370														
225S/M	356	80	436	476	373	286	105	391	149	280	55m6*		100				55m6*		100	16	49	10
250S/M	406	100	506			311	138	449	168	255	60m6	140	125	18	53	11	60m6	140	125	18	53	11
										312	60m6*						60m6*					
						349				274	65m6				58		60m6					
280S/M	457		557	600	468	368	142	510	190	350	65m6*						60m6*					
						419				299	75m6			20	67.5	12	65m6				58	
315S/M	508	120	628		497	406	152	558	216	376	65m6*			18	58	11	60m6*				53	
						457				325	80m6	170	160	22	71	14	65m6				58	
315B		182	630	698	595	630	162	830			75m6*	140	125	20	67.5	12						
											100m6	210	200	28	90	16						
355M/L	610	140	750	816	685	560	200	760	254	458	75m6*	140	125	20	67.5	12	60m6*	140	125	18	53	11
						630				388	100m6	210	200	28	90	16	80m6	170	160	22	71	14

IEC FRAME	H	HA	HC	HD	K	L	LC	S1	d1	d2	BEARINGS	
											D.E.	N.D.E.
63	63	8	124	182	7	216	241	2xM20x1.5	EM4	EM3	6201-ZZ	
71	71	12	139	198		248	276		DM5	EM4	6203-ZZ	6202-ZZ
80	80	13	157	216	10	276	313		DM6	DM4	6204-ZZ	6203-ZZ
90S	90	15	177	245		304	350	2xM25x1.5	DM8	DM6	6205-ZZ	6204-ZZ
90L						329	375					
100L	100	16	198	265	12	376	431		DM10	DM8	6206-ZZ	6205-ZZ
112M	112	18.5	235	296		393	448	2xM32x1.5			6307-ZZ	6206-ZZ
132S	132	20	274	344		452	519		DM12	DM10	6308-ZZ	6207-ZZ
132M						490	557					
160M	160	22	317	415	14.5	598	712	2xM40x1.5	DM16		6309-C3	6209-Z-C3
160L						642	756					
180M	180	28	360	455		664	782				6311-C3	6211-Z-C3
180L						702	820					
200M	200	30	402	500	18.5	729	842	2xM50x1.5	M20		6312-C3	6212-Z-C3
200L						767	880					
225S/M	225	34	466	598		817	935				6314-C3	
						847	995					
250S/M	250	42	491	623	24	923	1071	2xM63x1.5			6314-C3	
280S/M	280		578	748		1036	1188				6316-C3	
											6314-C3	
315S/M	315	52	613	812	28	1126	1274				6319-C3	6316-C3
						1156	1308					
315B		47.5	664	865		1432			M20		6316-C3	6314-C3
						1502			M24		6322-C3	6319-C3
355M/L	355	50	725	1040		1396	1561		M20		6316-C3	6314-C3
						1466	1661		M24	M20	6322-C3	6319-C3

Safe Areas Low Voltage Motors - Cast Iron Frame

Mechanical Data - W21 Range

"FF" Flange

IEC	"FF" FLANGE									N° OF
FRAME	FLANGE	C	LA	M	N	P	T	S	α	HOLES
63	FF-115	40	9	115	95	140	3	10	45°	4
71	FF-130	45		130	110	160	3.5			
80	FF-165	50	10	165	130	200		12		
90S/L		56								
100L	FF-215	63	11	215	180	250	4	15		
112M		70								
132S/M	FF-265	89	12	265	230	300				
160M/L	FF-300	108	18	300	250	350	5	19		
180M/L		121								
200M/L	FF-350	133		350	300	400				
225S/M	FF-400	149		400	350	450			22°30'	8
250S/M	FF-500	168		500	450	550				
280S/M		190								
315S/M	FF-600	216	22	600	550	660	6	24		
315B										
355M/L	FF-740	254		740	680	800				

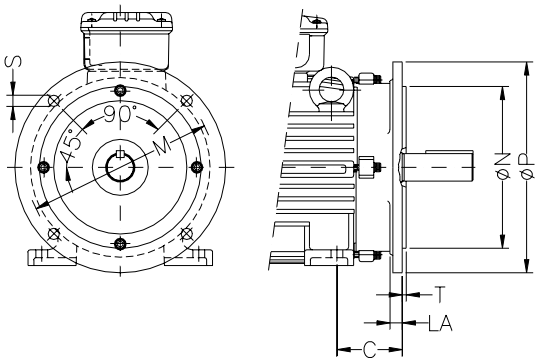

"C" DIN Flange

IEC	"C" DIN FLANGE							N° OF
FRAME	FLANGE	C	M	N	P	S	T	HOLES
63	C-90	40	75	60	90	M5	2.5	4
71	C-105	45	85	70	105	M6		
80	C-120	50	100	80	120		3	
90S/L	C-140	56	115	95	140	M8		
100L	C-160	63	130	110	160		3.5	
112M		70						
132S/M	C-200	89	165	130	200	M10		

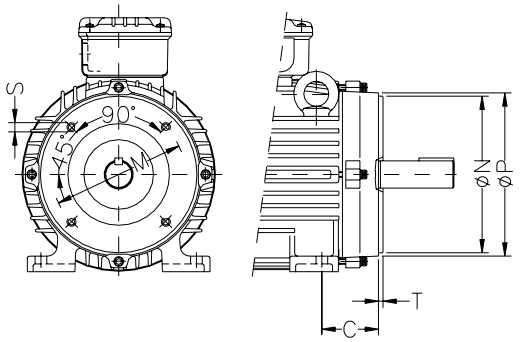

Safe Areas Low Voltage Motors - Cast Iron Frame

Mechanical Data - BF Line

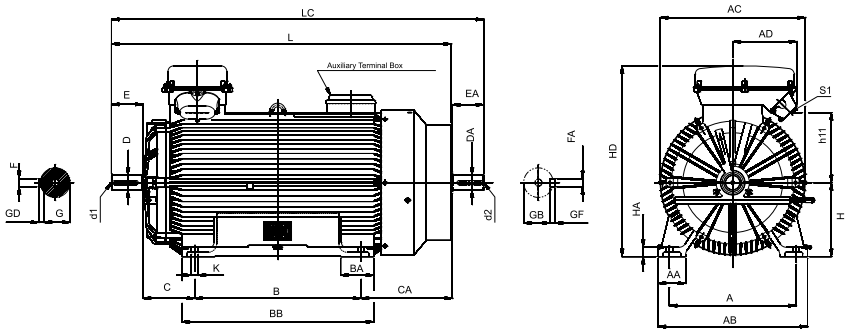

IEC FRAME	A	AA	AB	AC	AD	B	BA	BB	C	CA	SHAFT DIMENSIONS									
											D	E	F	G	GD	DA	EA	FA	GB	GF
315L (1)	508	125	632	622	358	508	155	610	216	445	90m6	170	25	81	14	70m6	140	20	62.5	12
315L (2)											70m6	140	20	62.5	12	60m6	140	18	53	11
355L (1)	610	130	730	705		630	170	750	254	530	100m6	210	28	90	16	80m6	170	22	71	14
355L (2)											75m6	140	20	67.5	12	60m6	140	18	53	11
355J (1)						800		920			100m6	210	28	90	16	80m6	170	22	71	14
355J (2)											75m6	140	20	67.5	12	60m6	140	18	53	11
400L (1)	686	150	810	785.5		710	180	850	280	575	110m6	210	28	100	16	80m6	170	22	71	14
400L (2)											80m6	170	22	71	14	60m6	140	18	53	11
400J (1)						900		1040			110m6	210	28	100	16	80m6	170	22	71	14
400J (2)											80m6	170	22	71	14	60m6	140	18	53	11
450K (1)	750	180	940	896.5		900	230	1090	250	564	120m6	210	32	109	18	100m6	210	28	90	16
450K (2)									-	-	85m6	170	22	76	14	75m6	140	20	67.5	12
450H (1)						1120		1310	250	564	120m6	210	32	109	18	100m6	210	28	90	16
450H (2)									-	-	85m6	170	22	76	14	75m6	140	20	67.5	12
500K (1)	850	180	1020	994		1000	300		280	920	130m6	250	32	119	18	110m6	210	28	100	16
500K (2)	Available on request																			
500H (1)	850	180	1020	994	358	1250	300	1560	280	920	130m6	250	32	119	18	110m6	210	28	100	16
500H (2)	Available on request																			

IEC FRAME	H	HA	HD	h11	K	L	LC	S1	d1	d2	Bearings		Notes
											D.E.	N.D.E	
315L (1)	315	40	863	286	28	1327	1479	2xM63x1.5 + 1xM20x1.5	DSM24	DSM20	6319 C3	6219 C3	-
315L (2)						1297	1449		DSM20		6316 C3		-
355L (1)	355	45	932	315		1609	1794		DSM24		6222 C3		(3)
355L (2)						1539	1694		DSM20		6219 C3		(4)
355J (1)						1779	1964		DSM24		6222 C3		(3)
355J (2)						1709	1864		DSM20		6219 C3		(4)
400L (1)	400	50	1032	370	35	1760	1945		DSM24		6224 C3		-
400L (2)						1720	1875		DSM20		6219 C3		(4)
400J (1)						1950	2135		DSM24		6224 C3		-
400J (2)						1910	2065		DSM20		6219 C3		(4)
450K (1)	450	60	1152	436	42	1909	2134		DSM24		6326 C3		-
450K (2)						-	-		DSM20		Sleeve Bearing		(4)
450H (1)						2129	2354		DSM24		6326 C3		-
450H (2)						-	-		DSM20		Sleeve Bearing		(4)
500K (1)	500	65	1260	496		2435	2660		DSM24		6328 C3		-
500K (2)	Available on request ----												
500H (1)	500	65	1260	496	42	2685	2910	2xM63x1.5 + 1xM20x1.5	DSM24	DSM24	6328 C3		-
500H (2)	Available on request ----												

Safe Areas Low Voltage Motors - Cast Iron Frame

Mechanical Data - BF Line

"FF" Flange

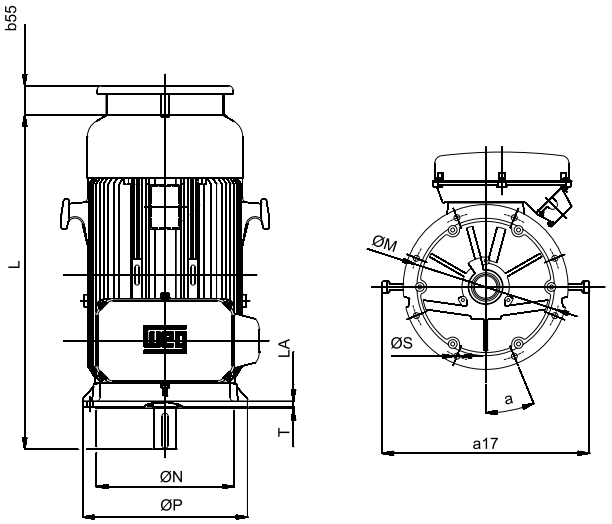

IEC FRAME	"FF" FLANGE									NR. HOLES	a17
	FLANGE	b55	LA	M	N	P	T	S	a		
315 L	FF-600	116.5	22	600	550	660	6	24	22.5°	8	830
355 L/J	FF-740	125	25	740	680	800					910
400 L/J	FF-940	131	28	940	880	1000		28			980
450 K/H	FF-1080		30	1080	1000	1150					1140
500 K/H							7				1340

Notes:
(1) 1500, 1000 and 750 rpm
(2) 3000 rpm
(3) or 6222 C3 for 4 poles and plus machines, N.D.E.
(4) For 60 Hz please contact WEG.

Notes:
- *All the dimensions are given in millimeters*
- *The customer must inform when application is vertical or on special coupling loads*
- *The values shown are subject to change without prior notice*
- *To obtain guaranteed values please refer to any local WEG office or it's distributor*
- *Shaft dimensions for II pole motors, only for direct coupling*
- *For changing power terminal box side, please contact our nearest sales office*
- *Execution with auxiliary terminal box and second end shaft available on request*
- *Terminal boxes for motors with nominal current higher than 1000A: 4xM63x1,5*
- *For vertical mounting, the D.E. bearing is replaced by an angular contact type, except for frame 315L (replaced by 7220 (1) or 7219 (2))*

Hazardous Areas (IIB)
Low Voltage Motors - Cast Iron Frame

Standard Features:

- Three-phase, multivoltage, IP55, TEFC
- Output: 0.33 up to 990kW
- Frames: 90 up to 450
- Voltage: 380 V, 50Hz or 440 V, 60Hz
- Class “F” insulation (ΔT=90K or 70K)
- Continuous duty: S1
- Design N
- Ambient temperature: As per Classification Societies, 1000m.a.s.l
- Flameproof motors Ex d or Ex de (when fitted with increased safety terminal box)
- Temperature Class T4; gases of Group IIB
- According to ATEX Directive 94/9/CE, Group II, category 2 for Zones 1 and 2
- Stainless steel nameplate including Certification data as per ATEX Directive
- Squirrel cage rotor/Aluminium die cast or Copper
- Regreasing nipples from frame 225S/M and above
- Metric thread cable entries in terminal box
- Thermistors 1 per phase connected into main terminal box
- Suitable for Inverter Duty applications
- Balancing with half key, vibration severity according to IEC 60034.14 grade A
- Color: RAL 5010

Optional Applications:

- Degree of Protection: IP56 or IP65
- Bearing seals: Lip seal / Oil seal / Taconite labyrinth seal on frame sizes 132 and above
- Cooling Method: IC410 (TENV)
- Special Voltages
- Space Heaters
- Winding thermal protection: RTD - Pt100 / Thermocouples
- Auxiliary terminal box
- Thermal protection on bearings: RTD - Pt100 / Thermocouples
- Design H
- Class H insulation
- Roller bearing for frame size 160 and above
- Double flange/shaft execution IM2202 (frames 355 and 400)
- Special shafts/flanges
- EExd or EExde Cable glands
- Forced ventilation unit for VSD application
- Encoder
- Certified purge
- Flying leads through closing plate
- Special paint finish
- Insulated bearings on frame 225 and above
- Canopy for vertical mounting
- Special balancing to meet IEC 60034.14 grade B vibration level
- Zone 22 (IP 5X)
- Zone 21 (IP 6X) - frame 355 and 400
- More options available on request
- Always check with factories optional executions
- Special balancing to meet IEC 60034.14 grade B vibration level

More options available, on request

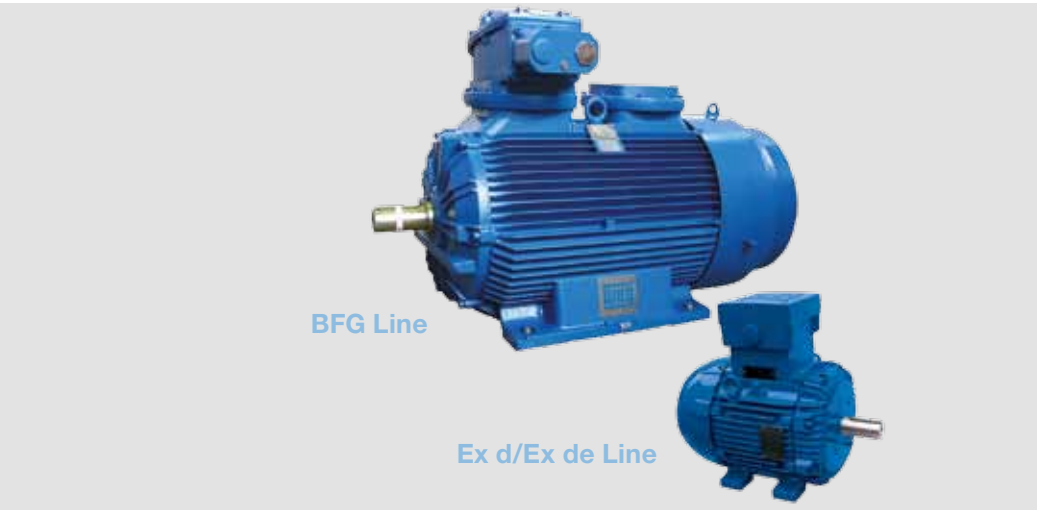

Hazardous Areas (IIB) Low Voltage Motors - Cast Iron Frame
Ex d / EEx de and BFG Lines

IEC Frame	Output		Full load torque Tn (Nm)	Locked rotor current Is/In	Locked rotor torque Ts/Tn	Breakdown torque Tmax / Tn	Inertia J Kgm²	Weight Kg	Rated speed (rpm)	380 V / 50 Hz						
										% of full load						Full load current I_n (A)
										Efficiency η			Power Factor (Cos φ)			
	ΔT = 90K	ΔT = 70K								50	75	100	50	75	100	
II Pole - 3000 min⁻¹																T EX Line - Basic design
90S	0.37	0.33	1.2	7.2	2.5	2.9	0.0018	31	2885	62.0	69.0	72.5	0.76	0.82	0.86	0.902
90S	0.55	0.49	1.8	7	2.5	2.9	0.0018	31	2860	66.0	71.5	73.5	0.75	0.83	0.86	1.32
90S	0.75	0.66	2.5	7	2.6	3	0.0018	32	2870	72.5	76.0	77.8	0.73	0.81	0.86	1.70
90S	1.5	1.3	5.1	6.5	2.2	2.5	0.0018	32	2830	80.0	81.5	81.2	0.75	0.84	0.89	3.15
90L	2.2	1.9	7.5	6.6	2.6	2.8	0.0024	34	2820	82.8	83.6	83.3	0.75	0.84	0.87	4.61
100L	3	2.6	10	7.2	2.4	2.6	0.0062	46	2870	83.5	85.6	85.1	0.80	0.86	0.89	6.02
112M	4	3.5	13	7.6	2.5	2.9	0.0084	60	2880	85.5	87.5	87.2	0.80	0.86	0.89	7.83
132S	5.5	4.9	18	8	2.5	2.9	0.0206	85	2930	84.5	87.5	88.2	0.77	0.85	0.89	10.6
132S	7.5	6.6	25	7.3	2.2	2.6	0.0206	85	2910	86.5	87.5	87.5	0.80	0.87	0.90	14.5
160M	11	9.7	36	8.3	2.4	2.8	0.0471	145	2940	88.3	90.1	90.2	0.80	0.86	0.89	20.8
160M	15	13.2	49	7.8	2.2	2.9	0.0530	152	2935	90.1	91.2	91.0	0.81	0.87	0.89	28.1
160L	18.5	15.0	60	8.2	2.3	3	0.0647	169	2940	90.7	92.0	91.5	0.78	0.86	0.89	34.5
180M	22	18.5	71	8.2	2.6	2.8	0.1135	218	2945	91.0	92.1	92.0	0.82	0.88	0.90	40.4
200L	30	25	97	7.5	2.6	2.6	0.2063	290	2960	90.5	92.1	92.6	0.80	0.87	0.89	55.3
200L	37	30	119	7.6	2.6	2.7	0.2242	305	2960	91.7	93.0	93.0	0.80	0.87	0.89	67.9
225S/M	45	35	145	7.9	2.4	3.2	0.4485	460	2960	91.9	93.4	93.5	0.86	0.90	0.92	80.4
250S/M	55	45	177	8.5	2.6	2.7	0.5023	514	2965	91.8	93.2	93.5	0.86	0.91	0.92	97.1
280S/M	75	65	241	7.5	2.1	2.6	1.08	783	2970	91.9	93.6	94.3	0.84	0.88	0.90	134
280S/M	90	75	289	8.1	2.1	2.6	1.27	841	2970	92.3	93.9	94.5	0.82	0.88	0.90	161
315S/M	110	95	354	7.6	2.1	2.6	1.41	973	2970	93.1	94.4	94.9	0.81	0.87	0.90	196
315S/M	132	115	425	7.5	2.1	2.6	1.65	1028	2965	93.5	94.7	94.8	0.84	0.89	0.91	232
315S/M	160	140	514	7.3	2	2.3	2.12	1165	2970	94.2	95.0	95.3	0.86	0.90	0.91	280
355M/L	200	175	641	7.2	1.6	2.4	4.83	1830	2980	93.7	95.0	95.3	0.90	0.92	0.92	347
355M/L	250	220	801	7.8	1.7	2.3	5.75	1972	2980	94.5	95.8	96.0	0.90	0.92	0.93	425
II Pole - 3000 min⁻¹																T EX Line - High Output
250S/M	75	65	242	8.3	2.7	3.1	0.5561	570	2960	92.6	93.3	93.3	0.85	0.89	0.91	134
280S/M	110	95	354	7.6	2.1	2.6	1.41	877	2970	93.1	94.4	94.9	0.81	0.87	0.90	196
II Pole - 3000 min⁻¹																BFG Line
BFG6 355L	250	220	801	6.2	1.5	2.9	2.9	1450	2980	94.3	95.7	96.2	0.82	0.87	0.89	444
BFG6 355L	280	245	898	6.0	1.5	2.7	3.2	1600	2978	94.8	96.0	96.4	0.84	0.88	0.89	496
BFG6 355L	315	275	1009	6.6	1.8	3.0	3.4	1700	2980	95.1	96.2	96.6	0.83	0.88	0.90	550
BFG6 355L	355	310	1138	6.6	1.7	3.0	3.9	1750	2980	95.4	96.3	96.7	0.83	0.88	0.90	620
BFG6 355J	400	350	1281	7.3	2.2	3.1	4.5	2000	2982	96.0	96.8	97.1	0.84	0.89	0.90	695
BFG6 400L	450	395	1440	7.5	2.0	3.4	8.0	2450	2985	95.5	96.6	97.1	0.84	0.89	0.91	774
BFG6 400L	500	440	1600	7.5	1.9	3.2	8.4	2600	2985	95.9	96.9	97.3	0.85	0.89	0.91	858
BFG6 400J (2)	560	490	1790	7.6	2.3	3.4	9.4	2950	2987	96.0	96.9	97.3	0.85	0.89	0.91	961

(1) Copper bar rotor
(2) Special Terminal box
(3) Special Oversized Terminal box.
VSD Operation:
- For VSD, with quadratic torque application load, please consider maximum output related to the Dq=70K column although considering temperature rise 90K. (Valid for frame sizes 400 and below. For frame sizes 450 and 500, please refer to us)
- For applications with constant load torque, please contact WEG.

Notes:
- All values are according to IEC 60034-1 tolerances.
- This data can be changed without prior notice.

Hazardous Areas (IIB) Low Voltage Motors - Cast Iron Frame
Ex d / EEx de and BFG Lines

IEC Frame	Output		Full load torque Tn (Nm)	Locked rotor current Is/In	Locked rotor torque Ts/Tn	Breakdown torque Tmax / Tn	Inertia J Kgm²	Weight Kg	Rated speed (rpm)	440 V / 60 Hz						
										% of full load						Full load current I_n (A)
										Efficiency η			Power Factor (Cos φ)			
	ΔT = 90K	ΔT = 70K								50	75	100	50	75	100	
II Pole - 3600 min-1																T EX Line - Basic design
90S	0.42	0.37	1.2	7.2	2.5	2.9	0.0018	31	3480	61.0	68.0	72.50	0.76	0.82	0.86	0.884
90S	0.62	0.55	1.7	7	2.5	2.9	0.0018	31	3470	66.0	72.0	73.50	0.75	0.83	0.86	1.29
90S	0.85	0.75	2.3	7	2.6	3	0.0018	32	3470	71.5	75.5	77.50	0.74	0.81	0.86	1.67
90S	1.8	1.6	5.1	6.5	2.2	2.5	0.0018	32	3400	79.7	81.5	81.70	0.78	0.85	0.89	3.25
90L	2.6	2.3	7.3	6.6	2.6	2.8	0.0024	34	3410	82.6	83.6	83.30	0.76	0.85	0.87	4.71
100L	3.6	3.2	9.9	7.2	2.4	2.6	0.0062	46	3460	83.3	85.6	85.10	0.81	0.86	0.89	6.24
112M	4.8	4.2	13	7.6	2.4	2.9	0.0084	60	3480	85.5	87.5	87.20	0.81	0.87	0.89	8.12
132S	6.3	5.6	17	8	2.5	2.9	0.0206	85	3525	84.0	87.5	88.20	0.78	0.85	0.89	10.5
132S	8.5	7.5	23	7.3	2.2	2.6	0.0206	85	3500	86.3	88.0	88.00	0.81	0.87	0.90	14.1
160M	12.5	11	34	8.3	2.4	2.8	0.0471	145	3540	87.0	89.8	90.00	0.81	0.86	0.89	20.5
160M	17	15	46	7.8	2.2	2.9	0.0530	152	3535	89.3	91.0	91.00	0.82	0.87	0.89	27.5
160L	21	18.5	57	8.2	2.3	3	0.0647	169	3540	90.6	92.1	91.70	0.78	0.86	0.89	33.8
180M	25	20	67	8.2	2.6	2.8	0.1135	218	3545	90.5	92.1	92.00	0.83	0.88	0.90	39.6
200L	36	30	97	7.5	2.6	2.5	0.2063	290	3555	90.5	92.1	92.60	0.82	0.87	0.89	57.3
200L	42	35	113	7.6	2.6	2.7	0.2242	305	3560	91.6	93.0	93.00	0.81	0.87	0.89	66.6
225S/M	53	45	142	7.9	2.4	3.1	0.4485	460	3560	91.0	93.0	93.50	0.86	0.90	0.92	80.8
250S/M	63	55	169	8.5	2.6	2.7	0.5023	514	3560	91.0	93.0	93.50	0.87	0.91	0.92	96.1
280S/M	85	70	227	7.5	2.1	2.6	1.08	783	3570	91.0	93.0	94.00	0.84	0.88	0.90	132
280S/M	105	90	281	8.1	2.1	2.6	1.27	841	3565	92.0	93.5	94.40	0.83	0.88	0.90	162
315S/M	125	110	334	7.6	2.1	2.6	1.41	973	3570	93.0	94.0	94.50	0.82	0.88	0.90	193
315S/M	151	130	405	7.5	2.2	2.6	1.65	1028	3565	93.3	94.6	94.80	0.84	0.89	0.91	230
315S/M	185	160	495	7.3	2	2.2	2.12	1165	3570	94.0	94.9	95.40	0.87	0.90	0.91	280
355M/L	230	200	614	7.2	1.6	2.4	4.83	1830	3580	92.4	94.5	95.00	0.90	0.91	0.92	345
355M/L	290	255	774	7.8	1.7	2.2	5.75	1972	3580	94.5	95.5	95.90	0.90	0.92	0.93	427
II Pole - 3600 min-1																T EX Line - High Output
250S/M	85	70	228	8.3	2.7	3.1	0.5561	570	3560	92.5	93.0	93.3	0.85	0.90	0.91	131
280S/M	125	110	334	7.6	2.1	2.6	1.41	877	3570	93.0	94.0	94.5	0.82	0.88	0.90	193
II Pole - 3600 min-1																BFG Line
BFG6 355L	275	240	734	6.2	1.5	2.9	2.9	1450	3576	94.2	95.6	96.1	0.82	0.87	0.89	422
BFG6 355L	305	265	815	6.0	1.5	2.7	3.2	1600	3574	94.7	95.9	96.3	0.84	0.88	0.89	467
BFG6 355L	345	300	921	6.6	1.8	3.0	3.4	1700	3576	95.0	96.1	96.5	0.83	0.88	0.90	521
BFG6 355L	390	340	1042	6.6	1.7	3.0	3.9	1750	3576	95.3	96.2	96.6	0.83	0.88	0.90	589
BFG6 355J	440	385	1174	7.3	2.2	3.1	4.5	2000	3578	95.9	96.7	97.0	0.84	0.89	0.90	661
BFG6 400L	495	435	1320	7.5	2.0	3.4	8.0	2450	3582	95.4	96.5	97.0	0.84	0.89	0.91	736
BFG6 400L	550	485	1466	7.5	1.9	3.2	8.4	2600	3582	95.8	96.8	97.2	0.85	0.89	0.91	816
BFG6 400J (2)	615	540	1639	7.6	2.3	3.4	9.4	2950	3584	95.9	96.8	97.2	0.85	0.89	0.91	912

(1) Copper bar rotor
(2) Special Terminal box
(3) Special Oversized Terminal box.
VSD Operation:
- For VSD, with quadratic torque application load, please consider maximum output related to the Dq=70K column although considering temperature rise 90K. (Valid for frame sizes 400 and below. For frame sizes 450 and 500, please refer to us)
- For applications with constant load torque, please contact WEG.

Notes:
- All values are according to IEC 60034-1 tolerances.
- This data can be changed without prior notice.

Hazardous Areas (IIB) Low Voltage Motors - Cast Iron Frame
Ex d / EEx de and BFG Lines

IEC Frame	Output		Full load torque Tn (Nm)	Locked rotor current Is/In	Locked rotor torque Ts/Tn	Breakdown torque Tmax / Tn	Inertia J Kgm²	Weight Kg	Rated speed (rpm)	380 V / 50 Hz						
										% of full load						Full load current I_n (A)
										Efficiency η			Power Factor (Cos φ)			
	ΔT = 90K	ΔT = 70K								50	75	100	50	75	100	
IV Pole - 1500 min⁻¹															T EX Line - Basic design	
90S	0.55	0.49	3.7	6.4	2.4	2.5	0.0039	32	1420	70.2	74.8	75.0	0.64	0.75	0.80	1.39
90S	1.1	0.97	7.6	5.5	2.2	2.3	0.0039	32	1390	73.5	76.4	75.5	0.67	0.80	0.85	2.60
90L	1.5	1.3	10	6.4	2.5	2.3	0.0056	35	1390	76.5	78.7	77.8	0.67	0.79	0.85	3.45
100L	2.2	1.9	15	6.7	2.5	2.7	0.0084	45	1410	81.5	82.0	81.7	0.69	0.81	0.85	4.81
100L	3	2.6	21	6.7	2.3	2.4	0.0092	47	1390	82.0	82.3	82.0	0.70	0.80	0.86	6.46
112M	4	3.5	27	6.9	2.3	2.6	0.0161	62	1420	84.0	84.5	84.0	0.72	0.81	0.86	8.41
132S	5.5	4.9	36	8	2.2	2.7	0.0426	84	1460	86.5	88.1	88.0	0.72	0.82	0.86	11.0
132M	7.5	6.6	49	8	2.3	2.6	0.0543	95	1465	87.0	88.6	88.4	0.75	0.84	0.88	14.6
160M	11	9.7	72	6	2	2.3	0.0803	143	1450	88.3	89.6	89.2	0.74	0.82	0.85	22
160L	15	13.2	99	6	2	2.2	0.1054	162	1450	89.5	90.5	90.1	0.73	0.82	0.86	29.4
180M	18.5	15	121	7	2.5	2.6	0.1794	213	1465	90.3	91.7	91.7	0.72	0.81	0.85	36.1
180L	22	18.5	143	7.5	2.5	2.5	0.2153	230	1465	91.5	92.4	92.3	0.72	0.81	0.85	42.6
200L	30	25	195	6.5	2	2.2	0.3310	290	1470	92.2	93.0	92.6	0.78	0.84	0.86	57.2
225S/M	37	30	240	7.2	2.1	2.4	0.6299	405	1475	91.6	92.4	92.5	0.79	0.86	0.89	68.3
225S/M	45	35	291	7	2.1	2.5	0.7699	434	1475	91.3	92.8	93.5	0.80	0.87	0.89	82.2
250S/M	55	45	356	7	2.1	2.4	0.9798	509	1475	92.8	93.5	93.4	0.83	0.88	0.91	98.3
280S/M	75	65	484	6.7	1.9	2.2	1.85	778	1480	92.1	93.4	93.6	0.82	0.87	0.89	137
280S/M	90	75	581	7.1	2.2	2.3	2.57	869	1480	92.6	94.1	94.2	0.84	0.88	0.90	161
315S/M	110	95	710	7.1	2.1	2.4	2.81	1036	1480	92.8	93.6	94.2	0.80	0.86	0.88	202
315S/M	132	115	852	7.5	2.1	2.4	3.37	1121	1480	93.0	93.5	94.3	0.81	0.86	0.89	241
315S/M	160	140	1032	7	2.2	2.5	3.77	1190	1480	93.0	95.0	95.4	0.78	0.85	0.88	290
355M/L	200	175	1286	6.6	2.1	2	7.46	1818	1485	94.2	95.0	95.1	0.84	0.87	0.89	359
355M/L	250	220	1608	6.9	2	2.3	8.39	1922	1485	94.5	95.2	95.7	0.82	0.87	0.89	446
355M/L	315	275	2026	6.5	2	2.2	11.18	2199	1485	95.0	95.8	96.1	0.83	0.87	0.89	560
IV Pole - 1500 min⁻¹															T EX Line - High Output	
250S/M	75	65	486	7.2	2.2	2.4	1.15	556	1475	92.6	93.4	93.5	0.80	0.86	0.88	138
280S/M	110	95	710	7.1	2.1	2.4	2.81	929	1480	92.8	93.6	94.2	0.80	0.86	0.88	202
IV Pole - 1500 min⁻¹															BFG Line	
BFG6 355L	250	220	1605	6.7	2.0	2.3	5.3	1450	1488	94.3	95.5	96.0	0.74	0.82	0.85	465
BFG6 355L	280	245	1797	6.9	2.1	2.4	5.9	1450	1488	94.6	95.8	96.2	0.72	0.82	0.85	520
BFG6 355L	315	275	2022	6.9	2.1	2.4	6.6	1650	1488	95.0	96.0	96.4	0.75	0.82	0.85	584
BFG6 355L	355	310	2277	7.4	2.6	2.6	7.4	1850	1489	96.1	97.1	96.5	0.73	0.81	0.85	658
BFG6 355J	400	350	2567	7.0	2.5	2.5	8.7	2100	1488	95.5	96.3	96.6	0.78	0.84	0.87	723
BFG6 355J	450	395	2888	7.1	2.4	2.4	9.8	2250	1488	95.7	96.5	96.8	0.76	0.84	0.87	812
BFG6 400L	450	395	2884	6.7	1.6	2.6	12.7	2500	1490	96.1	96.6	97.0	0.80	0.85	0.87	810
BFG6 400L	500	440	3205	6.7	1.6	2.6	13.1	2700	1490	96.4	96.9	97.0	0.79	0.85	0.87	900
BFG6 400J (2)	560	490	3589	6.8	1.7	2.5	13.8	2750	1490	96.5	97.0	97.1	0.78	0.85	0.87	1007
BFG6 400J (2)	630	555	4038	7.5	2.1	2.8	15.8	2950	1490	96.4	96.9	97.1	0.75	0.83	0.87	1133
BFG6 450H (2)	710	625	4545	6.9	2.0	2.7	20.1	4100	1492	95.9	96.8	97.2	0.78	0.85	0.87	1276
BFG6 450H (3)	800	705	5121	7.0	2.0	2.9	22.6	4600	1492	96.2	97.0	97.3	0.78	0.85	0.87	1436
BFG6 450H (1)(3)	900	790	5761	7.0	1.2	2.0	25.1	5400	1492	96.5	97.1	97.3	0.83	0.86	0.87	1615

Hazardous Areas (IIB) Low Voltage Motors - Cast Iron Frame
Ex d / EEx de and BFG Lines

IEC Frame	Output ΔT = 90K	Output ΔT = 70K	Full load torque Tn (Nm)	Locked rotor current Is/In	Locked rotor torque Ts/Tn	Breakdown torque Tmax / Tn	Inertia J Kgm²	Weight Kg	Rated speed (rpm)	440 V / 60 Hz % of full load Efficiency η 50	Efficiency η 75	Efficiency η 100	Power Factor (Cos φ) 50	Power Factor (Cos φ) 75	Power Factor (Cos φ) 100	Full load current I_n (A)
IV Pole - 1800 min⁻¹																T EX Line - Basic design
90S	0.62	0.55	3.4	6.4	2.4	2.5	0.0039	32	1725	70.2	74.8	75.5	0.64	0.75	0.80	1.35
90S	1.3	1.1	7.4	5.5	2.2	2.3	0.0039	32	1680	74.0	76.5	76.3	0.69	0.81	0.86	2.64
90L	1.8	1.6	10	6.4	2.5	2.3	0.0056	35	1690	76.5	79.5	79.0	0.70	0.80	0.86	3.48
100L	2.6	2.3	15	6.7	2.5	2.7	0.0084	45	1700	81.5	83.0	82.5	0.70	0.81	0.85	4.87
100L	3.6	3.2	20	6.7	2.2	2.3	0.0092	47	1700	82.0	82.6	82.7	0.70	0.80	0.86	6.64
112M	4.8	4.2	27	6.9	2.3	2.6	0.0161	62	1720	84.0	84.5	84.2	0.72	0.81	0.86	8.70
132S	6.3	5.6	34	8	2.1	2.7	0.0426	84	1760	86.5	87.9	87.8	0.73	0.82	0.86	10.9
132M	8.5	7.5	46	8	2.2	2.6	0.0543	95	1760	87.2	88.5	88.0	0.76	0.84	0.88	14.4
160M	12.5	11	68	6	2	2.3	0.0803	143	1750	88.3	89.6	89.2	0.75	0.82	0.85	21.6
160L	17	15	93	6	2	2.2	0.1054	162	1750	89.5	90.5	90.1	0.76	0.84	0.86	28.8
180M	21	18.5	114	7	2.6	2.6	0.1794	213	1760	90.2	91.7	92.0	0.73	0.82	0.86	34.8
180L	25	20	135	7.5	2.6	2.5	0.2153	230	1765	91.5	92.4	92.3	0.73	0.82	0.86	41.3
200L	36	30	195	6.5	2	2.2	0.3310	290	1765	92.2	93.0	92.6	0.79	0.85	0.87	58.6
225S/M	42	35	226	7.2	2.1	2.4	0.6299	405	1775	90.8	92.1	92.5	0.79	0.86	0.89	66.9
225S/M	53	45	286	7	2.1	2.5	0.7699	434	1770	91.3	92.9	93.4	0.80	0.87	0.89	83.7
250S/M	63	55	339	7	2.2	2.4	0.9798	509	1775	92.7	93.4	93.5	0.83	0.88	0.91	97.2
280S/M	85	70	456	6.7	2	2.2	1.85	778	1780	92.0	93.3	93.6	0.82	0.87	0.89	134
280S/M	105	90	563	7.1	2.2	2.3	2.57	869	1780	91.9	93.1	94.0	0.84	0.88	0.90	163
315S/M	125	110	671	7.1	2.1	2.4	2.81	1036	1780	92.0	93.6	94.0	0.80	0.86	0.88	198
315S/M	151	130	810	7.5	2.1	2.4	3.37	1121	1780	92.0	93.5	93.5	0.83	0.87	0.89	238
315S/M	185	160	993	7	2.2	2.5	3.77	1190	1780	93.1	95.0	95.3	0.78	0.85	0.88	289
355M/L	230	200	1231	6.6	2.1	2	7.46	1818	1785	94.0	95.0	95.2	0.84	0.87	0.89	356
355M/L	290	255	1552	6.9	2	2.3	8.39	1922	1785	94.5	95.2	95.6	0.83	0.88	0.89	447
355M/L	370	325	1980	6.5	2	2.2	11.18	2199	1785	94.9	95.8	96.0	0.83	0.88	0.89	568
IV Pole - 1800 min⁻¹																T EX Line - High Output
250S/M	75	65	404	7.2	2.2	2.4	1.15	556	1775	92.0	93.0	93.5	0.81	0.86	0.89	134
280S/M	110	95	590	7.1	2.1	2.4	2.81	929	1780	92.0	93.6	94.0	0.80	0.86	0.88	198
IV Pole - 1800 min⁻¹																BFG Line
BFG6 355L	275	240	1471	6.7	2.0	2.3	5.3	1450	1786	94.2	95.4	95.9	0.74	0.82	0.85	443
BFG6 355L	305	265	1631	6.9	2.1	2.4	5.9	1450	1786	94.5	95.7	96.1	0.72	0.82	0.85	490
BFG6 355L	345	300	1845	6.9	2.1	2.4	6.6	1650	1786	94.9	95.9	96.3	0.75	0.82	0.85	553
BFG6 355L	390	340	2084	7.4	2.6	2.6	7.4	1850	1787	96.0	97.0	96.4	0.73	0.81	0.85	625
BFG6 355J	440	385	2353	7.0	2.5	2.5	8.7	2100	1786	95.4	96.2	96.5	0.78	0.84	0.87	688
BFG6 355J	495	435	2647	7.1	2.4	2.4	9.8	2250	1786	95.6	96.4	96.7	0.76	0.84	0.87	772
BFG6 400L	495	435	2644	6.7	1.6	2.6	12.7	2500	1788	96.0	96.5	96.9	0.80	0.85	0.87	770
BFG6 400L	550	485	2938	6.7	1.6	2.6	13.1	2700	1788	96.3	96.8	96.9	0.79	0.85	0.87	856
BFG6 400J (2)	615	540	3285	6.8	1.7	2.5	13.8	2750	1788	96.4	96.9	97.0	0.78	0.85	0.87	956
BFG6 400J (2)	690	605	3685	7.5	2.1	2.8	15.8	2950	1788	96.3	96.8	97.0	0.75	0.83	0.87	1073
BFG6 450H (2)	780	685	4161	6.9	2.0	2.7	20.1	4100	1790	95.8	96.7	97.1	0.78	0.85	0.87	1212
BFG6 450H (3)	880	775	4694	7.0	2.0	2.9	22.6	4600	1790	96.1	96.9	97.2	0.78	0.85	0.87	1365
BFG6 450H (1)(3)	990	870	5281	7.0	1.2	2.0	25.1	5400	1790	96.4	97.0	97.2	0.83	0.86	0.87	1536

(1) Copper bar rotor
(2) Special Terminal box
(3) Special Oversized Terminal box.
VSD Operation:
- For VSD, with quadratic torque application load, please consider maximum output related to the Dq=70K column although considering temperature rise 90K. (Valid for frame sizes 400 and below. For frame sizes 450 and 500, please refer to us)
- For applications with constant load torque, please contact WEG.

Notes:
- All values are according to IEC 60034-1 tolerances.
- This data can be changed without prior notice.

Hazardous Areas (IIB) Low Voltage Motors - Cast Iron Frame
Ex d / EEx de and BFG Lines

IEC Frame	Output		Full load torque Tn (Nm)	Locked rotor current Is/In	Locked rotor torque Ts/Tn	Breakdown torque Tmax / Tn	Inertia J Kgm²	Weight Kg	Rated speed (rpm)	380 V / 50 Hz						
										% of full load						Full load current I_n (A)
										Efficiency η			Power Factor (Cos φ)			
	ΔT = 90K	ΔT = 70K								50	75	100	50	75	100	
VI Pole - 1000 min⁻¹															T EX Line - Basic design	
90L	0.75	0.66	7.9	4.8	1.9	1.9	0.0050	33	910	71.5	72.8	71.5	0.58	0.71	0.79	2.02
90L	1.1	0.97	12	4.5	2	2	0.0056	35	905	71.0	72.0	72.9	0.52	0.66	0.76	3.02
100L	1.5	1.3	15	4.8	2	2.2	0.0112	43	930	75.0	77.5	77.0	0.58	0.70	0.76	3.89
112M	2.2	1.9	23	5	2	2.1	0.0168	56	930	79.0	80.8	79.7	0.58	0.70	0.76	5.52
132S	3	2.6	30	5.3	1.8	2	0.0349	77	955	81.0	83.0	82.0	0.61	0.72	0.79	7.04
132M	4	3.5	40	6	1.9	2.1	0.0504	91	955	84.5	85.7	85.4	0.61	0.72	0.79	9.01
132M	5.5	4.9	55	6.4	2	2.2	0.0620	100	955	85.0	86.1	85.6	0.58	0.70	0.77	12.7
160M	7.5	6.6	74	6.1	2	2.4	0.1221	145	965	87.5	88.4	87.5	0.66	0.78	0.83	15.7
160L	11	9.7	108	6.6	2.2	2.6	0.1760	170	970	88.0	88.5	88.0	0.67	0.78	0.84	22.6
180L	15	13.2	149	7.5	2.3	2.4	0.3034	218	960	89.0	90.0	89.5	0.82	0.89	0.91	28
200L	18.5	15	182	6	1.9	2.1	0.3767	270	970	90.0	90.5	89.8	0.76	0.84	0.87	36
200L	22	18.5	217	6	2.1	2.2	0.4126	280	970	89.6	91.0	91.2	0.74	0.82	0.85	43.1
225S/M	30	25	292	7.2	2.4	2.5	0.9884	423	980	91.0	91.8	91.6	0.80	0.86	0.88	56.5
250S/M	37	30	361	7.5	2.5	2.4	1.22	491	980	90.5	92.5	92.4	0.80	0.86	0.88	69.1
280S/M	45	35	436	6.8	2.2	2.4	2.30	736	985	91.0	92.3	92.6	0.72	0.81	0.85	86.9
280S/M	55	45	533	6.5	2.1	2.3	2.64	773	985	92.0	93.2	93.4	0.74	0.84	0.87	103
315S/M	75	65	727	6.7	2.1	2.3	3.45	963	985	92.0	93.5	93.5	0.74	0.82	0.86	142
315S/M	90	75	873	6.3	1.9	2.1	3.68	993	985	92.8	93.9	93.6	0.75	0.83	0.86	170
315S/M	110	95	1066	6.4	2.1	2.2	5.29	1166	985	93.6	94.3	94.3	0.74	0.82	0.85	208
355M/L	160	140	1543	6.2	1.7	1.9	9.53	1730	990	93.5	95.2	95.2	0.73	0.80	0.84	304
355M/L	200	175	1929	6.3	1.9	2.1	12.39	1910	990	94.0	94.7	94.8	0.74	0.81	0.83	386
355M/L	250	220	2399	6.1	2	2	14.77	2185	995	94.3	95.2	95.5	0.74	0.81	0.83	479
355M/L	280	245	2715	6	1.9	2	14.77	2185	985	94.7	95.3	95.4	0.73	0.80	0.81	551
VI Pole - 1000 min⁻¹															T EX Line - High Output	
250S/M	45	35	439	8	2.5	2.5	1.55	544.9	980	91.5	92.3	92.5	0.82	0.87	0.89	83
280S/M	75	65	727	6.7	2.1	2.3	3.45	800	985	92.0	93.5	93.5	0.74	0.82	0.86	142
VI Pole - 1000 min⁻¹															BFG Line	
BFG6 355L	200	175	1927	7.0	1.9	2.2	8.7	1550	991	94.0	95.2	95.4	0.73	0.80	0.83	384
BFG6 355L	250	220	2409	7.0	1.9	2.1	10.4	1700	991	94.6	95.6	95.8	0.72	0.80	0.83	478
BFG6 355L	280	245	2698	7.2	2.3	2.4	11.8	1950	991	94.8	95.8	96.0	0.72	0.80	0.84	528
BFG6 355L	315	275	3039	7.0	2.3	2.5	13.1	2150	990	95.1	95.9	96.0	0.74	0.82	0.85	587
BFG6 355J	355	310	3424	7.0	2.4	2.5	14.8	2450	990	95.3	96.0	96.1	0.74	0.82	0.85	660
BFG6 400 L	400	350	3843	7.2	2.0	2.6	21.4	2400	994	95.4	96.2	96.5	0.73	0.81	0.84	750
BFG6 400L	450	395	4319	7.3	2.4	2.7	25.0	2800	995	95.2	96.2	96.5	0.71	0.80	0.84	843
BFG6 400J	500	440	4804	7.4	2.4	2.6	28.1	3000	994	95.7	96.4	96.6	0.77	0.83	0.85	925
BFG6 450H (2)	560	490	5380	5.8	1.1	2.6	42.9	4200	994	95.9	96.7	97.0	0.79	0.85	0.86	1020
BFG6 450H (3)	630	555	6053	5.5	1.0	2.2	47.4	4650	994	96.1	96.8	97.0	0.80	0.85	0.86	1147
BFG6 450H (1)(3)	710	625	6821	6.0	1.2	2.2	52.9	5050	994	96.2	96.9	97.2	0.78	0.84	0.86	1290

Hazardous Areas (IIB) Low Voltage Motors - Cast Iron Frame
Ex d / EEx de and BFG Lines

IEC Frame	Output		Full load torque Tn (Nm)	Locked rotor current Is/In	Locked rotor torque Ts/Tn	Breakdown torque Tmax / Tn	Inertia J Kgm²	Weight Kg	Rated speed (rpm)	440 V / 60 Hz						
										% of full load						Full load current I_n (A)
										Efficiency η			Power Factor (Cos φ)			
	ΔT = 90K	ΔT = 70K								50	75	100	50	75	100	
VI Pole - 1200 min⁻¹																T EX Line - Basic design
90L	0.85	0.75	7.3	4.8	1.9	1.9	0.0050	33	1105	71.6	73.0	71.6	0.58	0.71	0.79	1.97
90L	1.3	1.1	11	4.5	2	2	0.0056	35	1100	71.0	72.0	73.0	0.52	0.67	0.76	3.12
100L	1.8	1.6	15	4.8	2	2.2	0.0112	43	1130	75.5	77.5	77.0	0.60	0.70	0.76	4.04
112M	2.6	2.3	22	5	2	2.1	0.0168	56	1120	79.0	81.0	80.1	0.59	0.70	0.76	5.6
132S	3.6	3.2	30	5.3	1.7	2	0.0349	77	1150	81.0	83.0	82.5	0.62	0.73	0.79	7.25
132M	4.8	4.2	40	6	1.9	2.1	0.0504	91	1150	85.0	85.8	85.8	0.62	0.73	0.79	9.29
132M	6.3	5.6	52	6.4	2	2.2	0.0620	100	1150	85.0	86.1	85.6	0.60	0.71	0.77	12.5
160M	8.5	7.5	70	6.1	2	2.4	0.1221	145	1165	87.5	88.4	87.5	0.67	0.78	0.84	15.2
160L	12.5	11	102	6.6	2.2	2.6	0.1760	170	1165	88.0	88.8	88.3	0.68	0.79	0.84	22.1
180L	17	15	140	7.5	2.3	2.4	0.3034	218	1160	89.0	90.1	89.8	0.82	0.89	0.91	27.3
200L	21	18.5	171	6	1.9	2.1	0.3767	270	1175	89.7	90.5	90.0	0.76	0.84	0.87	35.2
200L	25	20	204	6	2.1	2.2	0.4126	280	1170	89.6	91.0	91.2	0.75	0.82	0.85	42.3
225S/M	36	30	291	7.2	2.4	2.4	0.9884	423	1180	91.0	91.8	91.6	0.82	0.87	0.89	57.9
250S/M	42	35	340	7.5	2.5	2.4	1.22	491	1180	90.5	92.4	92.4	0.81	0.86	0.88	67.8
280S/M	53	45	427	6.8	2.2	2.4	2.30	736	1185	91.0	92.3	92.6	0.74	0.82	0.85	88.4
280S/M	63	55	508	6.5	2.1	2.3	2.64	773	1185	92.0	93.2	93.4	0.75	0.84	0.87	102
315S/M	85	70	685	6.7	2.1	2.3	3.45	963	1185	92.0	93.5	93.5	0.75	0.83	0.86	139
315S/M	105	90	850	6.3	1.9	2.1	3.68	993	1180	92.8	93.9	93.6	0.76	0.83	0.86	171
315S/M	125	110	1007	6.4	2.1	2.2	5.29	1166	1185	93.5	94.4	94.4	0.75	0.82	0.85	204
355M/L	185	160	1485	6.2	1.7	1.9	9.53	1730	1190	93.5	95.0	95.2	0.74	0.81	0.84	304
355M/L	230	200	1846	6.3	1.9	2.1	12.39	1910	1190	93.9	94.6	94.7	0.75	0.81	0.83	384
355M/L	290	255	2327	6.1	2	2	14.77	2185	1190	94.2	95.1	95.5	0.75	0.82	0.83	480
355M/L	315	275	2539	6	1.9	1.9	14.77	2185	1185	94.6	95.3	95.4	0.75	0.81	0.82	528
VI Pole - 1200 min⁻¹																T EX Line - High Output
250S/M	53	45	429	8	2.5	2.5	1.55	544.9	1180	91.0	92.1	92.5	0.83	0.88	0.89	84.5
280S/M	85	70	685	6.7	2.1	2.3	3.45	800	1185	92.0	93.5	93.5	0.75	0.83	0.86	139
VI Pole - 1200 min⁻¹																BFG Line
BFG6 355L	220	190	1767	7.0	1.9	2.2	8.7	1550.0	1189	93.9	95.1	95.3	0.73	0.80	0.83	365
BFG6 355L	275	240	2208	7.0	1.9	2.1	10.4	1700.0	1189	94.5	95.5	95.7	0.72	0.80	0.83	454
BFG6 355L	305	265	2449	7.2	2.3	2.4	11.8	1950.0	1189	94.7	95.7	95.9	0.72	0.80	0.84	497
BFG6 355L	345	300	2773	7.0	2.3	2.5	13.1	2150.0	1188	95.0	95.8	95.9	0.74	0.82	0.85	555
BFG6 355J	390	340	3135	7.0	2.4	2.5	14.8	2450.0	1188	95.2	95.9	96.0	0.74	0.82	0.85	627
BFG6 400 L	440	385	3523	7.2	2.0	2.6	21.4	2400.0	1193	95.3	96.1	96.4	0.73	0.81	0.84	713
BFG6 400L	495	435	3959	7.3	2.4	2.7	25.0	2800.0	1194	95.1	96.1	96.4	0.71	0.80	0.84	802
BFG6 400J	550	485	4404	7.4	2.4	2.6	28.1	3000.0	1193	95.6	96.3	96.5	0.77	0.83	0.85	880
BFG6 450H (1)(2)	615	540	4924	5.8	1.1	2.6	42.9	4200.0	1193	95.8	96.6	96.9	0.79	0.85	0.86	968
BFG6 450H (1)(2)	690	605	5524	5.5	1.0	2.2	47.4	4650.0	1193	96.0	96.7	96.9	0.80	0.85	0.86	1086
BFG6 450H (1)(2)	780	685	6245	6.0	1.2	2.2	52.9	5050.0	1193	96.1	96.8	97.1	0.78	0.84	0.86	1226

(1) Copper bar rotor
(2) Special Terminal box
(3) Special Oversized Terminal box.
VSD Operation:
- For VSD, with quadratic torque application load, please consider maximum output related to the Dq=70K column although considering temperature rise 90K. (Valid for frame sizes 400 and below. For frame sizes 450 and 500, please refer to us)
- For applications with constant load torque, please contact WEG.

Notes:
- All values are according to IEC 60034-1 tolerances.
- This data can be changed without prior notice.

Hazardous Areas (IIB) Low Voltage Motors - Cast Iron Frame
Ex d / EEx de and BFG Lines

IEC Frame	Output		Full load torque Tn (Nm)	Locked rotor current Is/In	Locked rotor torque Ts/Tn	Breakdown torque Tmax / Tn	Inertia J Kgm²	Weight Kg	Rated speed (rpm)	380 V / 50 Hz						
										% of full load						Full load current I_n (A)
										Efficiency η			Power Factor (Cos φ)			
	ΔT = 90K	ΔT = 70K								50	75	100	50	75	100	
VIII Pole - 750 min⁻¹															T EX Line - Basic design	
90L	0.37	0.33	5.2	3.5	1.9	1.9	0.0045	30	685	54.0	61.0	62.0	0.46	0.56	0.67	1.35
90L	0.55	0.49	7.7	3.7	1.9	1.9	0.0056	34	680	54.0	61.0	64.7	0.44	0.55	0.64	2.02
100L	0.75	0.66	10	4.2	1.7	1.9	0.0095	41	695	67.0	71.0	70.5	0.46	0.58	0.66	2.45
100L	1.1	0.97	15	4.1	1.5	1.9	0.0129	45	690	68.0	72.0	72.0	0.47	0.60	0.68	3.41
112M	1.5	1.3	21	4.6	2.2	2.2	0.0224	61	695	75.0	76.0	76.0	0.50	0.63	0.70	4.28
132S	2.2	1.9	30	5.3	1.9	2	0.0552	82	700	79.0	79.5	79.0	0.56	0.68	0.75	5.64
132M	3	2.6	41	5.9	2.2	2.3	0.0753	95	700	80.0	82.5	82.0	0.54	0.66	0.74	7.51
160M	4	3.5	53	5.2	2	2.5	0.1221	144	725	82.6	84.8	85.9	0.51	0.64	0.72	9.83
160M	5.5	4.9	72	5.2	2.1	2.5	0.1436	157	725	82.5	84.7	85.2	0.50	0.63	0.72	13.6
160L	7.5	6.6	99	4.9	1.8	2.3	0.1652	165	720	84.5	86.0	85.3	0.54	0.66	0.74	18.1
180L	11	9.7	146	6.8	2	2.2	0.2758	217	720	87.5	88.3	87.8	0.71	0.81	0.85	22.4
200L	15	13.2	198	4.6	1.8	1.9	0.3767	270	725	87.5	88.9	88.9	0.61	0.72	0.77	33.3
225S/M	18.5	15	242	6.9	1.9	2.5	0.8472	393	730	88.8	90.0	89.8	0.75	0.83	0.86	36.4
225S/M	22	18.5	288	7.5	2	2.4	0.9884	420	730	89.4	90.9	90.5	0.76	0.84	0.86	42.9
250S/M	30	25	392	7.9	2	2.6	1.22	485	730	90.0	91.3	91.3	0.73	0.81	0.85	58.7
280S/M	37	30	481	6.5	1.7	2.1	2.30	700	735	91.0	92.2	92.1	0.70	0.79	0.82	74.4
280S/M	45	35	585	6.5	1.8	2.2	2.64	765	735	91.0	92.2	92.0	0.70	0.77	0.82	90.6
315S/M	55	45	715	6.5	1.7	2	3.10	845	735	91.6	93.2	92.8	0.72	0.80	0.83	108
315S/M	75	65	974	6.6	1.7	2	4.37	1062	735	92.4	93.3	93.3	0.70	0.80	0.83	147
315S/M	90	75	1169	6.8	1.9	2.1	5.29	1220	735	92.9	93.9	94.0	0.73	0.81	0.84	173
355M/L	110	95	1420	6.4	1.3	2	11.93	1750	740	93.0	94.2	94.5	0.66	0.77	0.82	216
355M/L	132	115	1704	6.5	1.4	2	13.19	1800	740	93.5	94.6	94.8	0.66	0.75	0.81	261
355M/L	160	140	2065	6.6	1.4	2	16.33	1710	740	93.8	94.8	94.8	0.68	0.77	0.81	317
355M/L	200	175	2581	6.8	1.4	1.9	19.47	1900	740	93.8	94.8	95.1	0.65	0.75	0.81	394
VIII Pole - 750 min⁻¹															T EX Line - High Output	
250S/M	37	30	484	8.2	2.1	2.5	1.55	540	730	89.5	91.5	91.0	0.72	0.82	0.86	71.8
VIII Pole - 750 min⁻¹															BFG Line	
BFG6 355L	160	140	2059	6.5	1.7	2.0	12.4	1300	742	94.0	94.9	95.1	0.70	0.78	0.81	316
BFG6 355L	200	175	2571	6.5	1.9	2.1	14.6	1500	743	94.3	95.2	95.4	0.68	0.77	0.81	393
BFG6 355L	250	220	3213	6.5	2.0	2.2	18.1	1850	743	95.7	96.5	96.6	0.68	0.77	0.81	485
BFG6 355J	280	245	3599	6.5	1.9	2.1	21.8	2200	743	95.1	95.8	95.8	0.70	0.78	0.81	548
BFG6 400L	315	275	4038	7.0	2.8	2.8	25.7	2250	745	95.6	96.5	96.7	0.68	0.77	0.82	604
BFG6 400L	355	310	4551	7.0	2.9	2.9	28.8	2500	745	94.9	95.8	96.1	0.66	0.76	0.81	693
BFG6 400L	400	350	5128	7.0	3.1	3.1	31.1	2750	745	95.2	95.9	96.1	0.67	0.76	0.81	781
BFG6 400J (1)	450	395	5761	7.5	3.4	3.4	37.7	3350	746	95.6	96.3	96.5	0.68	0.78	0.82	864
BFG6 450H (1)(2)	500	440	6401	7.2	2.1	2.5	65.4	4600	746	95.0	96.0	96.3	0.73	0.80	0.82	962
BFG6 450H (1)(2)	560	490	7169	7.2	2.1	2.4	73.5	5100	746	95.0	96.0	96.3	0.74	0.80	0.82	1077

Hazardous Areas (IIB) Low Voltage Motors - Cast Iron Frame
Ex d / EEx de and BFG Lines

IEC Frame	Output		Full load torque Tn (Nm)	Locked rotor current Is/In	Locked rotor torque Ts/Tn	Breakdown torque Tmax / Tn	Inertia J Kgm²	Weight Kg	Rated speed (rpm)	440 V / 60 Hz						
										% of full load						Full load current I_n (A)
										Efficiency η			Power Factor (Cos φ)			
	ΔT = 90K	ΔT = 70K								50	75	100	50	75	100	
VIII Pole - 900 min⁻¹																T EX Line - Basic design
90L	0.42	0.37	4.8	3.5	1.9	2	0.0045	30	840	55.0	62.0	63.0	0.45	0.55	0.66	1.33
90L	0.62	0.55	7.1	3.7	1.9	2	0.0056	34	830	56.5	63.0	66.0	0.43	0.55	0.64	1.94
100L	0.85	0.75	9.6	4.2	1.7	1.9	0.0095	41	845	68.0	72.0	71.5	0.46	0.58	0.66	2.36
100L	1.3	1.15	15	4.1	1.5	1.9	0.0129	45	830	68.0	72.2	72.2	0.47	0.61	0.68	3.53
112M	1.8	1.6	20	4.6	2.2	2.2	0.0224	61	840	75.5	76.5	77.0	0.51	0.63	0.70	4.38
132S	2.6	2.3	29	5.3	1.8	2	0.0552	82	850	79.5	80.0	79.4	0.57	0.70	0.75	5.73
132M	3.6	3.2	40	5.9	2	2.2	0.0753	95	850	80.5	83.0	82.5	0.55	0.66	0.74	7.74
160M	4.8	4.2	52	5.2	1.9	2.5	0.1221	144	875	83.0	85.0	85.9	0.53	0.65	0.72	10.2
160M	6.3	5.6	69	5.2	2.1	2.5	0.1436	157	875	83.0	85.0	85.2	0.51	0.64	0.72	13.5
160L	8.5	7.5	93	4.9	1.8	2.3	0.1652	165	870	84.5	86.0	85.5	0.54	0.66	0.74	17.6
180L	12.5	11	137	6.8	1.9	2.2	0.2758	217	870	87.7	88.5	88.0	0.71	0.81	0.85	21.9
200L	17	15	186	4.6	1.8	1.9	0.3767	270	875	87.5	89.0	89.0	0.62	0.72	0.77	32.6
225S/M	21	18.5	229	6.9	1.8	2.5	0.8472	393	875	88.8	90.1	90.0	0.76	0.83	0.86	35.6
225S/M	25	20	271	7.5	1.9	2.4	0.9884	420	880	89.4	90.9	90.9	0.77	0.84	0.86	42
250S/M	36	30	391	7.9	2	2.5	1.22	485	880	90.0	91.4	91.6	0.74	0.82	0.85	60.7
280S/M	42	35	453	6.5	1.9	2	2.30	700	885	91.0	92.2	92.1	0.71	0.79	0.82	73
280S/M	53	45	572	6.5	1.7	2.1	2.64	765	885	91.0	92.5	92.3	0.73	0.78	0.82	91.9
315S/M	63	55	680	6.5	1.7	2	3.10	845	885	91.6	93.2	93.0	0.73	0.80	0.83	107
315S/M	85	70	917	6.6	1.7	1.9	4.37	1062	885	92.4	93.4	93.4	0.71	0.80	0.83	144
315S/M	105	90	1133	6.8	1.9	2.1	5.29	1220	885	92.8	93.9	94.0	0.73	0.81	0.84	174
355M/L	125	110	1341	6.4	1.3	2	11.93	1750	890	93.0	94.2	94.5	0.67	0.78	0.82	212
355M/L	151	130	1620	6.5	1.3	2	13.19	1800	890	93.5	94.6	94.8	0.67	0.76	0.81	258
355M/L	185	160	1985	6.6	1.3	2	16.33	1710	890	93.8	94.7	94.7	0.69	0.78	0.81	316
355M/L	230	200	2468	6.8	1.4	1.8	19.47	1900	890	93.8	94.8	95.2	0.66	0.76	0.81	391
VIII Pole - 900 min⁻¹																T EX Line - High Output
250S/M	42	35	456	8.2	2	2.5	1.55	540	880	89.5	91.5	91.0	0.72	0.82	0.86	70.4
VIII Pole - 900 min⁻¹																BFG Line
BFG6 355L	175	150	1877	6.5	1.7	2.0	12.4	1300	890	93.9	94.8	95.0	0.70	0.78	0.81	298
BFG6 355L	220	190	2356	6.5	1.9	2.1	14.6	1500	892	94.2	95.1	95.3	0.68	0.77	0.81	374
BFG6 355L	275	240	2946	6.5	2.0	2.2	18.1	1850	892	95.6	96.4	96.5	0.68	0.77	0.81	462
BFG6 355J	305	265	3267	6.5	1.9	2.1	21.8	2200	892	95.0	95.7	95.7	0.70	0.78	0.81	516
BFG6 400L	345	300	3685	7.0	2.8	2.8	25.7	2250	894	95.5	96.4	96.6	0.68	0.77	0.82	571
BFG6 400L	390	340	4166	7.0	2.9	2.9	28.8	2500	894	94.8	95.7	96.0	0.66	0.76	0.81	658
BFG6 400L	440	385	4700	7.0	3.1	3.1	31.1	2750	894	95.1	95.8	96.0	0.67	0.76	0.81	742
BFG6 400J (1)	495	435	5281	7.5	3.4	3.4	37.7	3350	895	95.5	96.2	96.4	0.68	0.78	0.82	822
BFG6 450H (1)(2)	550	485	5867	7.2	2.1	2.5	65.4	4600	895	94.9	95.9	96.2	0.73	0.80	0.82	915
BFG6 450H (1)(2)	615	540	6561	7.2	2.1	2.4	73.5	5100	895	94.9	95.9	96.2	0.74	0.80	0.82	1023

Hazardous Areas (IIB) Low Voltage Motors - Cast Iron Frame

Mechanical Data - Ex d / Ex de

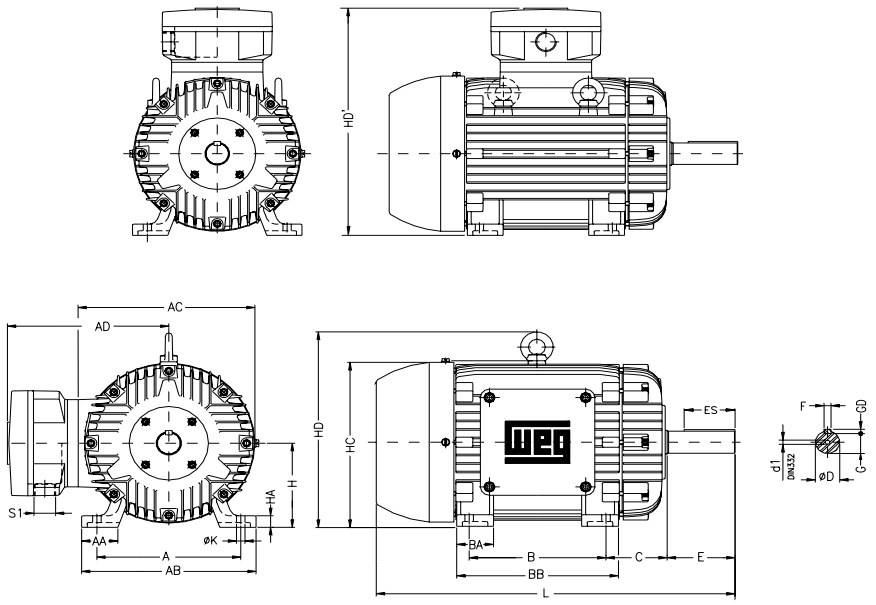

IEC FRAME	A	AA	AB	AC	AD	B	BA	BB	C	SHAFT DIMENSIONS						H	HA	HC	HD	HD'	K	L	S1	d1	BEARINGS	
										D	E	ES	F	G	GD										D.E.	N.D.E.
90S	140	38	164	179	214	100	42	131	56	24j6	50	36	8	20	7	90	12	177		304	10	316	M25	DM8	6205-ZZ	6204-ZZ
90L						125		156														341	x			
100L	160	44	188	199	224	140	50	173	63	28j6	60	45		24		100	15	200		324	12	384	1.5	DM10	6206-ZZ	6205-ZZ
112M	190	48	220	223	243			183	70							112	17	237	222	355		394	M32		6307-ZZ	6206-ZZ
132S	216	51	248	270	271		55	188	89	38k8	80	63	10	33	8	132	19.5	282	330	403		451	x	DM12	6308-ZZ	6307-ZZ
132M						178		226														489	1.5			
160M	254	64	308	312	322	210	65	254	108	42k6	110	80	12	37		160	22	315	370	482	14.5	598	2	DM16	6309-C3	6309-Z-C3
160L						254		298														652	x			
180M	279	80	350	358	342	241	75	294	121	48k6			14	42.5	9	180	28	367	422	522		664	M40		6311-C3	6311-Z-C3
180L						279		332														702	x 1.5			
200M	318	82	385	399	370	267	85	332	133	55m6			16	49	10	200	30	403	477	570	18.5	729	2	M20	6312-C3	6312-Z-C3
200L						305		370														767	x			
225S/M	356	80	436	472	413	286	105	391	149	55m6*		100				225	34	475	550	638		817	M50		6314-C3	
						311				60m6	140	125	18	53	11							847	x 1.5			
250S/M	406	100	506			349	138	445	168	60m6*						250	42	500	575	663	24	923	2			
										65m6*				58												
280S/M	457		557	610	551	368	142	510	190	75m6			20	67.5	12	280		600	693	831		1036	x		6316-C3	
						419																				
315S/M	508	120	628		573	406	152	558	216	65m6*			18	58	11	315	52	640	728	888	28	1126	M63		6314-C3	
						457				80m6	170	160	22	71	14							1156	x		6319-C3	6316-C3
355M/L	610	140	750	780	672	560	200	760	254	75m6*	140	125	20	67.5	12	355	50	755	864	1027		1399	1.5		6314-C3	6314-C3
						630				100m6	210	200	18	90	16							1469		M24	6322-C3	6319-C3

Notes:

- *All the dimensions are given in millimeters*
- *The data for frame 355M/L shown above are for horizontal mounting applications under standard coupling loads*
- *The customer must indicate when application is vertical or under special coupling loads*
- *Motors with second shaft end under request*
- *The values shown are subject to change without prior notice*

** Shaft dimensions for II pole motors, only for direct coupling*

Hazardous Areas (IIB) Low Voltage Motors - Cast Iron Frame

Mechanical Data - Ex d / Ex de

"FF" Flange

IEC FRAME	"FF" FLANGE									Nº OF HOLES
	FLANGE	C	LA	M	N	P	T	S	α	
90S/L	FF-165	56	10	165	130	200	3.5	12	45°	4
100L	FF-215	63	11	215	180	250	4	15		
112M		70								
132S/M	FF-265	89	12	265	230	300				
160M/L	FF-300	108	13	300	250	350				
180M/L		121	14				5	19		
200M/L	FF-350	133	18	350	300	400				
225S/M	FF-400	149		400	350	450			22°30'	8
250S/M	FF-500	168		500	450	550				
280S/M		190								
315S/M	FF-600	216	22	600	550	660	6	24		
355M/L	FF-740	254		740	680	800				

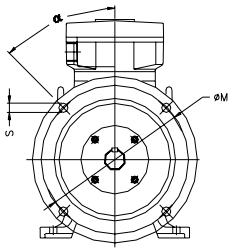

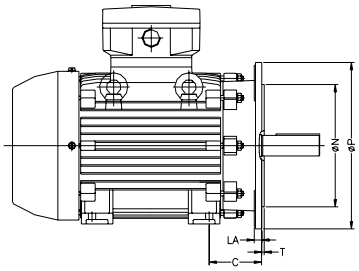

"C" DIN Flange

IEC FRAME	"FF" FLANGE							Nº OF HOLES
	FLANGE	C	M	N	P	S	T	
90S/L	FF-165	56	115	95	140	M8	3	4
100L	FF-215	63	130	110	160		3.5	
112M		70						
132S/M	FF-265	89	165	130	200	M10		

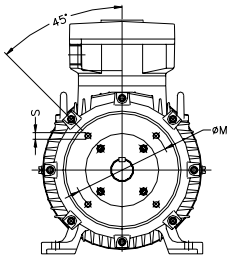

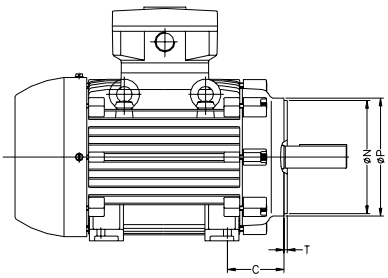

Hazardous Areas (IIB) Low Voltage Motors - Cast Iron Frame

Mechanical Data - BFG Line

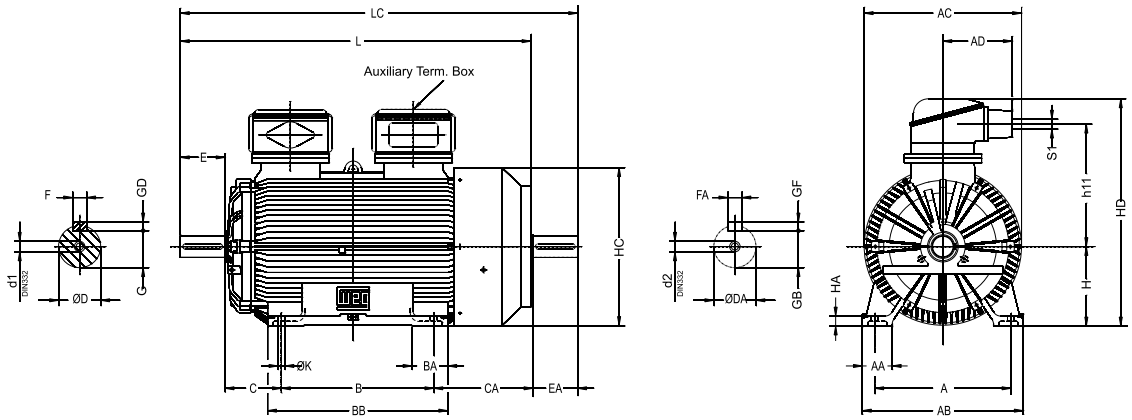

IEC FRAME	A	AA	AB	AC	AD	B	BA	BB	C	CA	SHAFT DIMENSIONS									
											D	E	F	G	GD	DA	EA	FA	GB	GF
355 L (1)	610	130	730	705	356	630	170	750	254	515	100m6	210	28	90	16	80m6	170	22	71	14
355 L (2)		130	730	705			170	750	254		75m6	140	20	67.5	12	60m6	140	18	53	11
355 J (1)		130	730	705		800	170	920	254		100m6	210	28	90	16	80m6	170	22	71	14
355 J (2)		130	730	705		800	170	920	254		75m6	140	20	67.5	12	60m6	140	18	53	11
400 L (1)	686	150	810	785.5		710	180	850	280	560	110m6	210	28	100	16	80m6	170	22	71	14
400 L (2)	686	150	810	786.0		710	180	850	280	545	80m6	170	22	71	14	60m6	140	18	53	11
400 J (1)	686	150	810	786.0		900	180	1040	280	545	110m6	210	28	100	16	80m6	170	22	71	14
400 J (2)	686	150	810	786.0		900	180	1040	280	545	80m6	170	22	71	14	60m6	140	18	53	11
450 K (1)	750	180	940	896		900	230	1090	250	515	120m6	210	32	109	18	100m6	210	28	90	16
450 K (2)	750	180	940	896		900	230	1090	-	538	85m6	170	22	76	14	75m6	140	20	67.5	12
450 H (1)	750	180	940	896		1120	230	1310	250	538	120m6	210	32	109	18	100m6	210	28	90	16
450 H (2)	750	180	940	896		1120	230	1310	-	538	85m6	170	22	76	14	75m6	140	20	67.5	12

IEC FRAME	H	HA	HC	HD	h11	K	L	LC	S1	d1	d2	BEARINGS		Notes
												D.E.	N.D.E	
355 L (1)	355	45	707.5	1051	555	28	1594	1779	2xM63x1.5 + 1xM20x1.5	DS M24	DS M20	6222 C3	6219 C3	(3)
355 L (2)	355	45	707.5	1049.5	1050	28	1524	1679		DS M20	DS M20	6219 C3		(4)
355 J (1)	355	45	707.5	1049.5	1050	28	1764	1949	M63*1.5	DS M24	DS M20	6222 C3		(3)
355 J (2)	355	45	707.5	1049.5	1050	28	1694	1849	M63*1.5	DS M20	DS M20	6219 C3		(4)
400 L (1)	400	50	793	1132	590	35	1745	1930	M63*1.5	DS M24	DS M20	6224 C3		
400 L (2)	400	50	793	1123	1123	35	1705	1860	M63*1.5	DS M20	DS M20	6219 C3		(4)
400 J (1)	400	50	793	1123	1123	35	1935	2110	M63*1.5	DS M24	DS M20	6224 C3		
400 J (2)	400	50	793	1123	1123	35	1895	2050	M63*1.5	DS M20	DS M20	6219 C3		(4)
450 K (1)	450	60	898	1187	596	42	1909	2134	M63*1.5	DS M24	DS M20	6326 C3		
450 K (2)	450	60	898	1183	1183	42	-	-	M63*1.5	DS M20	DS M20	Sleeve Bearing		(4)
450 H (1)	450	60	898	1183	1183	42	2129	2354	M63*1.5	DS M24	DS M20	6326 C3		
450 H (2)	450	60	898	1183	1183	42	-	-	M63*1.5 M63*1.5	DS M20	DS M20	Sleeve Bearing		(4)

Notes:
(1) 1500, 1000 and 750 rpm
(2) 3000 rpm
(3) or 6222 C3 for 4 poles and plus machines, N.D.E.
(4) For 60 Hz please contact WEG.

Hazardous Areas (IIB) Low Voltage Motors - Cast Iron Frame Ex d / EEx de and BFG Lines

Mechanical Data - BFG Line

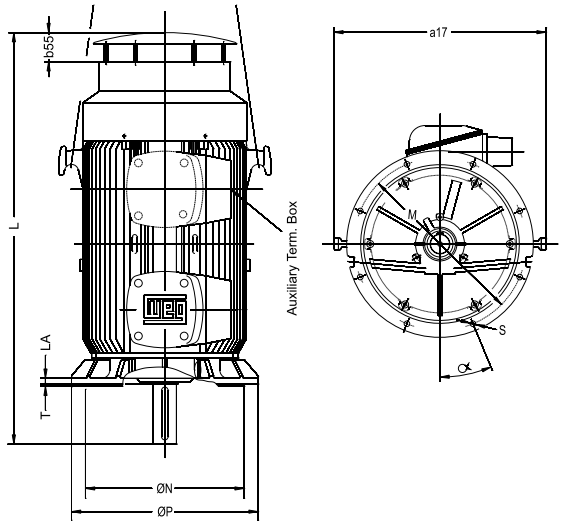

IEC FRAME	"FF" FLANGE DIMENSIONS											
	FLANGE	L	LA	M	N	P	T	S	A	NR. HOLES	A17	B55
355 L (1)	FF-740	1579	25	740	680	800	6	24	22.5°	8	910	125
355 L (2)		1509										
355 J (1)		1749										
355 J (2)		1679										
400 L (1)	FF-940	1730	28	940	880	1000		28			980	131
400 L (2)		1690										
400 J (1)		1920										
400 J (2)		1880										
450 K (1)	FF-1080	1898	30	1080	1000	1150					1140	151
450 K (2)		-										
450 H (1)		2118										
450 H (2)		-										

Notes:
(1) 1500, 1000 and 750 rpm
(2) 3000 rpm
- *All the dimensions are given in millimeters*
- *The customer must inform when application is vertical or on special coupling loads*
- *The values shown are subject to change without prior notice*
- *To obtain guaranteed values please refer to any local WEG office or it's distributor*
- *Shaft dimensions for II pole motors, only for direct coupling*
- *Drawings for 450 II pole frame motors available on request*
- *Execution with auxiliary terminal box and second end shaft available on request*
- *"EExde" execution dimensions on request*
- *For vertical mounting, the D.E. bearing is replaced by an angular contact type*

Hazardous Areas (IIC)
Low Voltage Motors - Cast Iron Frame

Standard Features:

- Three-phase, multivoltage, IP55, TEFC
- Output: 0.12 up to 500kW
- Frames: 71 up to 400
- Voltage: 380 V, 50Hz or 440 V, 60Hz
- Class “F” insulation (ΔT=90K or 70K)
- Continuous duty: S1
- Design N
- Ambient temperature: As per Classification Societies, 1000m.a.s.l
- Flameproof motors Ex d or Ex de (when fitted with increased safety terminal box)
- Temperature Class T4; gases of Group IIC
- According to ATEX Directive 94/9/CE, Group II, category 2 for Zones 1 and 2
- Stainless steel nameplate including Certification data as per ATEX Directive
- Squirrel cage rotor/Aluminium die cast or Copper
- Regreasing nipples from frame 160 and above
- Metric thread cable entries in terminal box
- Thermistors 1 per phase connected into main terminal box
- Suitable for Inverter Duty applications
- Balancing with half key, vibration severity according to IEC 60034.14 grade A
- Color: RAL 5010

Optional Applications:

- Degree of Protection: IP56 or IP65
- Oil seal on D.E. side
- Cooling Method: IC410 (TENV)
- Special Voltages
- Space Heaters
- Winding thermal protection (frame sizes 160 and above):
  RTD - Pt100 / Thermocouples
- Auxiliary terminal box (frame sizes 250 and above)
- Design H
- Class H insulation
- Roller bearing for frame size 160 and above
- Double flange/shaft execution IM2202 (frames 355 and 400)
- Special shafts/flanges
- EEx d or EEx de Cable glands
- Forced ventilation unit for VSD application
- Encoder
- Certified purge on frames 250 and above
- Flying leads through closing plate
- Special paint finish
- Detachable feet on frames 71 up to 160
- Insulated bearings on frame 200 and above
- Canopy for vertical mounting
- Special balancing to meet IEC 60034.14 grade B vibration level
- Zone 22 (IP 5X) and Zone 21 (IP 6X) on frames 250 and above

More options available, on request

Hazardous Areas (IIC) Low Voltage Motors - Cast Iron Frame
Ex d / Ex de and BFGC Lines

IEC Frame	Output		Full load torque Tn (Nm)	Locked rotor current Is/In	Locked rotor torque Ts/Tn	Breakdown torque Tmax / Tn	Inertia J Kgm²	Weight Kg	Rated speed (rpm)	380 V / 50 Hz						
										% of full load						Full load current I_n (A)
										Efficiency η			Power Factor (Cos φ)			
	ΔT = 90K	ΔT = 70K								50	75	100	50	75	100	
II Pole - 3000 min-1																BFGC Line
BFGC8 71M	0.37	0.37	1.3	4.2	3	2.8	0.00034	15	2800	56.0	59.5	59.5	0.55	0.83	0.86	1.10
BFGC8 71M	0.55	0.55	1.9	5.5	2.9	3.1	0.00042	16	2805	67.0	70.0	70.0	0.55	0.83	0.86	1.39
BFGC8 80M	0.75	0.75	2.6	5.4	2.25	2.6	0.00063	24	2790	69.0	72.0	72.0	0.60	0.88	0.89	1.78
BFGC8 80M	1.1	1.1	3.8	6.1	2.6	2.9	0.00079	26	2790	75.0	77.0	77.0	0.57	0.84	0.87	2.49
BFGC8 90S	1.5	1.5	5.1	6.3	2.5	2.8	0.00124	32	2830	75.0	77.0	77.0	0.57	0.84	0.87	3.40
BFGC8 90L	2.2	1.9	7.4	6.9	2.8	2.65	0.00155	34	2845	80.5	82.0	82.0	0.58	0.85	0.88	4.63
BFGC8 100L	3	2.6	10	7.1	2.5	2.9	0.00251	43	2865	81.0	83.0	83.5	0.57	0.84	0.87	6.27
BFGC8 112M	4	3.5	13	7.6	2.5	2.95	0.00451	58	2890	83.0	84.0	84.5	0.58	0.85	0.88	8.17
BFGC8 132S	5.5	5.5	18	6.6	2.7	2.8	0.00967	77	2910	83.0	84.0	84.5	0.58	0.85	0.88	11.24
BFGC8 132S	7.5	7.5	24	7.9	2.7	3.1	0.01225	84	2925	84.0	85.0	85.5	0.60	0.88	0.89	14.97
BFGC8 160M	11	9.7	36	6.9	2.8	3	0.0294	148	2940	80.0	81.0	80.6	0.58	0.85	0.88	23.56
BFGC8 160M	15	13.2	49	7.7	3	3.2	0.0391	166	2940	81.0	83.0	83.0	0.65	0.89	0.92	29.85
BFGC8 160L	18.5	16	60	8	3.3	3	0.0459	178	2945	84.5	86.0	86.1	0.64	0.88	0.91	35.87
BFGC7 180M	22	18.5	72	7.2	2.4	2.9	0.0615	205	2930	90.0	92.0	92.0	0.60	0.88	0.89	40.82
BFGC7 200L	30	25	98	7.3	2.1	2.8	0.104	240	2930	91.0	93.0	93.0	0.58	0.85	0.88	55.69
BFGC7 200L	37	30	121	7.3	2.2	2.9	0.127	250	2930	91.0	93.0	93.5	0.60	0.88	0.89	67.55
BFGC7 225M	45	35	146	7.2	2	2.6	0.222	375	2945	91.0	93.0	93.5	0.58	0.85	0.88	83.09
BFGC4 250M	55	45	178	6.8	2.1	2.7	0.320	450	2958	90.9	92.4	93.0	0.87	0.91	0.91	98.74
BFGC4 280SA	75	65	242	8.2	2.9	3.2	0.395	580	2963	91.3	93.3	94.0	0.82	0.88	0.90	134.69
BFGC4 280MA	90	75	290	8.4	2.9	3.0	0.500	620	2959	93.1	94.3	94.5	0.88	0.90	0.90	160.78
BFGC4 315SA (1)	110	95	353	6.1	1.7	2.3	1.1	810	2973	92.8	94.2	94.6	0.85	0.88	0.89	198.50
BFGC4 315MA (1)	132	115	423	6.8	2.0	2.2	1.2	890	2977	93.4	94.7	95.1	0.83	0.88	0.89	236.95
BFGC3 315MA (2)	160	140	513	6.8	1.9	3.1	1.6	1050	2978	93.7	95.1	95.7	0.81	0.88	0.90	282.24
BFGC3 315MA (2)	200	175	641	7.0	1.7	3.2	2.0	1150	2978	94.6	95.4	96.0	0.84	0.89	0.91	347.83
BFGC3 315LA (2)	250	220	801	7.5	1.8	2.9	2.3	1250	2981	94.7	95.7	96.0	0.82	0.89	0.91	434.79
BFGC3 355MA	250	220	801	6.2	1.5	2.9	2.9	1750	2980	94.2	95.5	96.0	0.82	0.87	0.89	444.56
BFGC3 355MA	280	245	898	6.0	1.5	2.7	3.2	1900	2978	94.6	95.8	96.2	0.84	0.88	0.89	496.88
BFGC3 355MA	315	275	1009	6.6	1.8	3.0	3.4	2000	2980	94.9	96.0	96.4	0.83	0.88	0.90	551.63
BFGC3 400LA	355	310	1136	7.5	1.8	3.4	6.4	2500	2985	95.8	96.7	97.1	0.84	0.89	0.90	617.19
BFGC3 400LA	400	350	1280	7.1	1.7	3.1	7.1	2800	2984	96.1	96.9	97.2	0.86	0.89	0.90	694.72
BFGC3 400LA	450	395	1440	7.5	2.0	3.4	8.0	2450	2985	95.3	96.4	96.9	0.84	0.89	0.91	775.36
IV Pole - 1500 min-1																BFGC Line
BFGC8 71M	0.25	0.25	1.8	3.8	2.15	2.5	0.00051	15	1355	56.0	59.5	59.5	0.43	0.75	0.80	0.80
BFGC8 71M	0.37	0.37	2.6	3.8	2.25	2.9	0.00063	16	1350	60.0	63.0	63.0	0.45	0.76	0.81	1.10
BFGC8 80M	0.55	0.55	3.7	4.6	2.3	2.7	0.00098	24	1410	69.0	72.0	72.0	0.45	0.76	0.81	1.43
BFGC8 80M	0.75	0.75	5.1	5	2.4	2.6	0.00125	26	1400	74.0	76.0	76.0	0.43	0.75	0.80	1.87
BFGC8 90S	1.1	1.1	7.5	5.4	2.3	2.4	0.00204	32	1410	78.0	79.0	79.0	0.51	0.81	0.84	2.52
BFGC8 90L	1.5	1.5	10.2	5.8	2.5	2.6	0.00260	35	1405	78.0	79.0	79.0	0.51	0.81	0.84	3.43
BFGC8 100L	2.2	1.9	15	5.1	2.1	2.2	0.00388	43	1405	78.0	79.0	79.0	0.51	0.81	0.84	5.04
BFGC8 100L	3	2.6	20.5	5.3	2.1	2.3	0.00499	46	1400	80.0	81.0	81.0	0.51	0.81	0.84	6.70
BFGC8 112M	4	3.5	27	6.6	2.2	2.8	0.0101	60	1430	84.0	85.0	85.0	0.51	0.81	0.84	8.51
BFGC8 132S	5.5	5	37	5.5	2.3	2.7	0.0211	84	1435	83.0	84.0	84.5	0.55	0.83	0.86	11.5
BFGC8 132M	7.5	6.6	50	6.5	2.8	2.9	0.0279	94	1445	85.0	87.0	87.0	0.53	0.82	0.85	15.4
BFGC8 160M	11	9.7	71	6.7	2.7	2.8	0.0542	159	1470	85.0	87.0	87.0	0.49	0.80	0.83	23.1
BFGC8 160L	15	13.2	98	6.3	2.6	2.7	0.0712	178	1460	85.0	87.0	87.5	0.53	0.82	0.85	30.6
BFGC7 180M	18.5	15	121	6.5	2.5	2.3	0.113	215	1460	90.0	92.0	92.0	0.51	0.81	0.84	36.4
BFGC7 180L	22	18.5	144	6.4	2.5	2.3	0.134	236	1460	90.0	92.0	92.5	0.55	0.83	0.86	42.0
BFGC7 200L	30	25	196	6.2	2.2	3	0.213	250	1460	91.0	93.0	93.0	0.49	0.80	0.83	59.0
BFGC7 225S	37	30	241	6.3	2.2	2.8	0.362	310	1465	91.0	93.0	93.5	0.51	0.81	0.84	71.6
BFGC7 225M	45	35	293	6.2	2.3	2.8	0.428	390	1465	92.0	94.0	94.0	0.49	0.80	0.83	87.6
BFGC4 250M	55	45	354	6.6	1.8	2.4	0.670	465	1482	91.7	92.7	93.0	0.71	0.79	0.83	108
BFGC4 280SA	75	65	482	6.9	1.8	2.2	0.961	600	1487	93.9	94.3	94.0	0.83	0.85	0.85	143
BFGC4 280MA	90	75	581	6.9	1.9	2.3	1.1	650	1480	93.4	93.6	94.0	0.77	0.84	0.86	169
BFGC4 315SA (1)	110	95	711	7.5	3.0	3.2	1.4	850	1477	94.0	94.6	94.5	0.73	0.81	0.84	211
BFGC4 315MA (1)	132	115	854	7.6	3.0	3.3	1.6	900	1476	94.4	94.8	94.6	0.76	0.83	0.85	249
BFGC3 315MA (2)	160	140	1029	6.8	2.0	2.5	2.6	1250	1485	93.7	94.8	95.1	0.74	0.82	0.86	297
BFGC3 315MA (2)	200	175	1287	6.9	2.1	2.5	2.6	1350	1484	93.7	94.8	95.1	0.73	0.81	0.85	376
BFGC3 315LA (2)	250	220	1608	7.5	2.5	2.5	3.7	1450	1485	94.7	95.6	95.8	0.75	0.83	0.86	461
BFGC3 355MA	250	220	1605	6.7	2.0	2.3	5.3	1750	1488	94.1	95.3	95.8	0.74	0.82	0.85	466
BFGC3 355MA	280	245	1797	6.9	2.1	2.4	5.9	1800	1488	94.4	95.6	96.0	0.72	0.82	0.85	521
BFGC3 355MA	315	275	2022	6.9	2.1	2.4	6.6	1950	1488	94.8	95.8	96.2	0.75	0.82	0.85	585
BFGC3 355MA	355	310	2277	7.4	2.6	2.6	7.4	2150	1489	95.9	96.9	96.3	0.73	0.81	0.85	659
BFGC3 400LA	400	350	2564	6.3	1.5	2.5	11.4	2600	1490	94.9	95.8	96.1	0.81	0.86	0.87	727
BFGC3 400LA	450	395	2884	6.7	1.6	2.6	12.7	2900	1490	95.9	96.4	96.8	0.80	0.85	0.87	812
BFGC3 400LA (3)	500	440	3205	6.7	1.6	2.6	13.1	3100	1490	96.2	96.7	96.8	0.79	0.85	0.87	902

(1) Copper bar rotor
(2) Special Terminal box
(3) Special Oversized Terminal box.
VSD Operation:
- For VSD, with quadratic torque application load, please consider maximum output related to the Dq=70K column although considering temperature rise 90K. (Valid for frame sizes 400 and below. For frame sizes 450 and 500, please refer to us)
- For applications with constant load torque, please contact WEG.

Notes:
- All values are according to IEC 60034-1 tolerances.
- This data can be changed without prior notice.

Hazardous Areas (IIC) Low Voltage Motors - Cast Iron Frame Ex d / Ex de and BFGC Lines

IEC Frame	Output		Full load torque Tn (Nm)	Locked rotor current Is/In	Locked rotor torque Ts/Tn	Breakdown torque Tmax / Tn	Inertia J Kgm²	Weight Kg	Rated speed (rpm)	440 V / 60 Hz						
										% of full load						Full load current I_n (A)
										Efficiency η			Power Factor (Cos φ)			
	ΔT = 90K	ΔT = 70K								50	75	100	50	75	100	
II Pole - 3600 min-1															BFGC Line	
BFGC8 71M	0.44	0.44	1.3	4.2	3	2.8	0.00034	15	3360	55.9	59.4	59.4	0.55	0.83	0.86	1.14
BFGC8 71M	0.66	0.66	1.9	5.5	2.9	3.1	0.00042	16	3366	66.9	69.9	69.9	0.55	0.83	0.86	1.44
BFGC8 80M	0.90	0.90	2.6	5.4	2.25	2.6	0.00063	24	3348	68.9	71.9	71.9	0.60	0.88	0.89	1.8
BFGC8 80M	1.32	1.32	3.8	6.1	2.6	2.9	0.00079	26	3348	74.9	76.9	76.9	0.57	0.84	0.87	2.6
BFGC8 90S	1.80	1.80	5.1	6.3	2.5	2.8	0.00124	32	3396	74.9	76.9	76.9	0.57	0.84	0.87	3.5
BFGC8 90L	2.64	2.64	7.4	6.9	2.8	2.65	0.00155	34	3414	80.4	81.9	81.9	0.58	0.85	0.88	4.8
BFGC8 100L	3.6	3.6	10	7.1	2.5	2.9	0.00251	43	3438	80.9	82.9	83.4	0.57	0.84	0.87	6.5
BFGC8 112M	4.8	4.8	13	7.6	2.5	2.95	0.00451	58	3468	82.9	83.9	84.4	0.58	0.85	0.88	8.5
BFGC8 132S	6.6	6.6	18	6.6	2.7	2.8	0.00967	77	3492	82.9	83.9	84.4	0.58	0.85	0.88	11.7
BFGC8 132S	9	9	24	7.9	2.7	3.1	0.01225	84	3510	83.9	84.9	85.4	0.60	0.88	0.89	15.5
BFGC8 160M	13.2	11	36	6.9	2.8	3	0.0294	148	3528	79.9	80.9	80.5	0.58	0.85	0.88	24.5
BFGC8 160M	18	15	49	7.7	3	3.2	0.0391	166	3528	80.9	82.9	82.9	0.65	0.89	0.92	31.0
BFGC8 160L	22	18.5	60	8	3.3	3	0.0459	178	3534	84.4	85.9	86.0	0.64	0.88	0.91	37.2
BFGC7 180M	26	22	71	7.2	2.4	2.9	0.0615	205	3516	89.9	91.9	91.9	0.60	0.88	0.89	41.6
BFGC7 200L	35	30	96	7.3	2.1	2.8	0.104	240	3516	90.9	92.9	92.9	0.58	0.85	0.88	56.8
BFGC7 200L	44	35	119	7.3	2.2	2.9	0.127	250	3516	90.9	92.9	93.4	0.60	0.88	0.89	68.9
BFGC7 225M	53	45	143	7.2	2	2.6	0.222	375	3534	90.9	92.9	93.4	0.58	0.85	0.88	84.8
BFGC4 250M	60	50	161	6.8	2.1	2.7	0.320	450	3550	90.8	92.3	92.9	0.87	0.91	0.91	93
BFGC4 280SA	80	70	215	8.2	2.9	3.2	0.395	580	3556	91.2	93.2	93.9	0.82	0.88	0.90	124
BFGC4 280MA	95	80	256	8.4	2.9	3.0	0.500	620	3551	93.0	94.2	94.4	0.88	0.90	0.90	147
BFGC4 315SA (1)	120	105	321	6.1	1.7	2.3	1.1	810	3568	92.7	94.1	94.5	0.85	0.88	0.89	187
BFGC4 315MA (1)	145	125	388	6.8	2.0	2.2	1.2	890	3572	93.3	94.6	95.0	0.83	0.88	0.89	225
BFGC3 315MA (2)	175	150	468	6.8	1.9	3.1	1.6	1050	3574	93.6	95.0	95.6	0.81	0.88	0.90	267
BFGC3 315MA (2)	220	190	588	7.0	1.7	3.2	2.0	1150	3574	94.5	95.3	95.9	0.84	0.89	0.91	331
BFGC3 315LA (2)	275	240	734	7.5	1.8	2.9	2.3	1250	3577	94.6	95.6	95.9	0.82	0.89	0.91	413
BFGC3 355MA	275	240	734	6.2	1.5	2.9	2.9	1750	3576	94.1	95.4	95.9	0.82	0.87	0.89	423
BFGC3 355MA	305	265	815	6.0	1.5	2.7	3.2	1900	3574	94.5	95.7	96.1	0.84	0.88	0.89	468
BFGC3 355MA	345	300	921	6.6	1.8	3.0	3.4	2000	3576	94.8	95.9	96.3	0.83	0.88	0.90	522
BFGC3 400LA	390	340	1040	7.5	1.8	3.4	6.4	2500	3582	95.7	96.6	97.0	0.84	0.89	0.90	586
BFGC3 400LA	440	385	1173	7.1	1.7	3.1	7.1	2800	3581	96.0	96.8	97.1	0.86	0.89	0.90	661
BFGC3 400LA	495	435	1320	7.5	2.0	3.4	8.0	2450	3582	95.2	96.3	96.8	0.84	0.89	0.91	737
IV Pole - 1800 min-1															BFGC Line	
BFGC8 71M	0.30	0.30	1.8	3.8	2.2	2.5	0.00051	15	1626	55.9	59.4	59.4	0.43	0.75	0.80	0.83
BFGC8 71M	0.44	0.44	2.6	3.8	2.3	2.9	0.00063	16	1620	59.9	62.9	62.9	0.45	0.76	0.81	1.14
BFGC8 80M	0.66	0.66	3.7	4.6	2.3	2.7	0.00098	24	1692	68.9	71.9	71.9	0.45	0.76	0.81	1.49
BFGC8 80M	0.90	0.90	5.1	5.0	2.4	2.6	0.00125	26	1680	73.9	75.9	75.9	0.43	0.75	0.80	1.94
BFGC8 90S	1.3	1.3	7.5	5.4	2.3	2.4	0.00204	32	1692	77.9	78.9	78.9	0.51	0.81	0.84	2.61
BFGC8 90L	1.8	1.8	10	5.8	2.5	2.6	0.00260	35	1686	77.9	78.9	78.9	0.51	0.81	0.84	3.56
BFGC8 100L	2.6	2.6	15	5.1	2.1	2.2	0.00388	43	1686	77.9	78.9	78.9	0.51	0.81	0.84	5.23
BFGC8 100L	3.6	3.6	20	5.3	2.1	2.3	0.00499	46	1680	79.9	80.9	80.9	0.51	0.81	0.84	6.95
BFGC8 112M	4.8	4.8	27	6.6	2.2	2.8	0.0101	60	1716	83.9	84.9	84.9	0.51	0.81	0.84	8.83
BFGC8 132S	6.6	5.8	37	5.5	2.3	2.7	0.0211	84	1722	82.9	83.9	84.4	0.55	0.83	0.86	11.9
BFGC8 132M	9	7.9	50	6.5	2.8	2.9	0.0279	94	1734	84.9	86.9	86.9	0.53	0.82	0.85	16.0
BFGC8 160M	13	11	71	6.7	2.7	2.8	0.0542	159	1764	84.9	86.9	86.9	0.49	0.80	0.83	24.0
BFGC8 160L	18	15	98	6.3	2.6	2.7	0.0712	178	1752	84.9	86.9	87.4	0.53	0.82	0.85	31.8
BFGC7 180M	22	18.5	119	6.5	2.5	2.3	0.113	215	1752	89.9	91.9	91.9	0.51	0.81	0.84	37.1
BFGC7 180L	26	22	142	6.4	2.5	2.3	0.134	236	1752	89.9	91.9	92.4	0.55	0.83	0.86	42.9
BFGC7 200L	35	30	193	6.2	2.2	3.0	0.213	250	1752	90.9	92.9	92.9	0.49	0.80	0.83	60.2
BFGC7 225S	44	35	237	6.3	2.2	2.8	0.362	310	1758	90.9	92.9	93.4	0.51	0.81	0.84	73.0
BFGC7 225M	53	45	288	6.2	2.3	2.8	0.428	390	1758	91.9	93.9	93.9	0.49	0.80	0.83	89.4
BFGC4 250M	60	50	322	6.6	1.8	2.4	0.670	465	1778	91.6	92.6	92.9	0.71	0.79	0.83	102
BFGC4 280SA	80	70	428	6.9	1.8	2.2	0.961	600	1784	93.8	94.2	93.9	0.83	0.85	0.85	132
BFGC4 280MA	95	80	511	6.9	1.9	2.3	1.1	650	1776	93.3	93.5	93.9	0.77	0.84	0.86	154
BFGC4 315SA (1)	120	105	647	7.5	3.0	3.2	1.4	850	1772	93.9	94.5	94.4	0.73	0.81	0.84	199
BFGC4 315MA (1)	145	125	782	7.6	3.0	3.3	1.6	900	1771	94.3	94.7	94.5	0.76	0.83	0.85	237
BFGC3 315MA (2)	175	150	938	6.8	2.0	2.5	2.6	1250	1782	93.6	94.7	95.0	0.74	0.82	0.86	281
BFGC3 315MA (2)	220	190	1180	6.9	2.1	2.5	2.6	1350	1781	93.6	94.7	95.0	0.73	0.81	0.85	357
BFGC3 315LA (2)	275	240	1474	7.5	2.5	2.5	3.7	1450	1782	94.6	95.5	95.7	0.75	0.83	0.86	438
BFGC3 355MA	275	240	1471	6.7	2.0	2.3	5.3	1750	1786	94.0	95.2	95.7	0.74	0.82	0.85	444
BFGC3 355MA	305	265	1631	6.9	2.1	2.4	5.9	1800	1786	94.3	95.5	95.9	0.72	0.82	0.85	491
BFGC3 355MA	345	300	1845	6.9	2.1	2.4	6.6	1950	1786	94.7	95.7	96.1	0.75	0.82	0.85	554
BFGC3 355MA	390	340	2084	7.4	2.6	2.6	7.4	2150	1787	95.8	96.8	96.2	0.73	0.81	0.85	626
BFGC3 400LA	440	385	2350	6.3	1.5	2.5	11.4	2600	1788	94.8	95.7	96.0	0.81	0.86	0.87	691
BFGC3 400LA	495	435	2644	6.7	1.6	2.6	12.7	2900	1788	95.8	96.3	96.7	0.80	0.85	0.87	772
BFGC3 400LA	550	485	2938	6.7	1.6	2.6	13.1	3100	1788	96.1	96.6	96.7	0.79	0.85	0.87	858

Hazardous Areas (IIC) Low Voltage Motors - Cast Iron Frame
Ex d / Ex de and BFGC Lines

IEC Frame	Output		Full load torque Tn (Nm)	Locked rotor current Is/In	Locked rotor torque Ts/Tn	Breakdown torque Tmax / Tn	Inertia J Kgm²	Weight Kg	Rated speed (rpm)	380 V / 50 Hz						
										% of full load						Full load current I_n (A)
										Efficiency η			Power Factor (Cos φ)			
	ΔT = 90K	ΔT = 70K								50	75	100	50	75	100	
VI Pole - 1000 min⁻¹																BFGC Line
BFGC8 71M	0.18	0.18	1.8	3.1	2.1	2.3	0.00081	15	930	56.0	59.5	60.0	0.30	0.55	0.65	0.70
BFGC8 71M	0.25	0.25	2.5	3.7	2.2	2.5	0.00101	16	940	59.5	63.5	64.0	0.30	0.59	0.67	0.89
BFGC8 80M	0.37	0.37	3.8	3.6	2.3	2.5	0.00191	25	925	62.0	66.5	67.0	0.34	0.65	0.72	1.17
BFGC8 80M	0.55	0.55	5.7	4.1	2.35	2.5	0.00239	27	915	69.0	72.0	72.0	0.36	0.67	0.74	1.57
BFGC8 90S	0.75	0.75	7.8	3.7	1.8	2.1	0.00323	32	915	67.0	70.0	70.0	0.36	0.67	0.74	2.20
BFGC8 90L	1.1	1.1	11.5	4.1	2.1	2.3	0.00419	35	915	71.0	73.0	73.0	0.35	0.66	0.73	3.14
BFGC8 100L	1.5	1.5	15.4	4.7	2.2	2.3	0.00657	46	930	74.0	76.0	76.0	0.40	0.72	0.77	3.89
BFGC8 112M	2.2	2.2	22	6.1	2.6	2.7	0.0158	60	960	80.5	82.0	82.0	0.41	0.73	0.78	5.23
BFGC8 132S	3	3	29	6.3	2.3	2.5	0.0272	84	975	81.0	83.0	83.5	0.42	0.73	0.79	6.91
BFGC8 132M	4	4	40	6.3	2.4	2.9	0.0323	88	960	81.0	83.0	83.0	0.43	0.75	0.80	9.15
BFGC8 132M	5.5	5.5	55	6.1	2.3	2.9	0.0384	95	955	81.0	83.0	83.5	0.45	0.76	0.81	12.36
BFGC8 160M	7.5	7.5	74	6.7	2.7	2.4	0.0812	161	970	84.5	86.0	86.0	0.43	0.75	0.80	16.56
BFGC8 160L	11	9.7	109	6.0	2.2	2.3	0.109	182	965	85.5	88.0	88.5	0.40	0.72	0.77	24.53
BFGC7 180L	15	13.2	148	5.2	1.9	2.3	0.227	236	965	86.0	89.0	89.5	0.41	0.73	0.78	32.65
BFGC7 200L	18.5	15	183	6.0	1.9	2.4	0.244	240	965	89.0	91.0	91.0	0.45	0.76	0.81	38.13
BFGC7 200L	22	18.5	218	6.0	1.9	2.4	0.279	250	965	89.0	91.0	91.5	0.45	0.76	0.81	45.10
BFGC7 225M	30	25	294	5.8	1.8	2.5	0.661	390	975	90.0	92.0	92.5	0.49	0.80	0.83	59.37
BFGC4 250M	37	30	359	6.2	2.4	2.6	0.68	450	984	89.0	90.3	90.2	0.64	0.75	0.80	77.90
BFGC4 280SA	45	35	437	6.7	2.6	2.7	0.82	610	983	90.0	91.0	90.8	0.68	0.77	0.81	92.96
BFGC4 280MA	55	45	533	7.0	2.3	2.3	1.1	650	985	92.8	92.8	92.3	0.72	0.80	0.82	110.41
BFGC4 315SA (1)	75	65	727	7.3	2.8	3.0	2.0	700	985	90.0	91.5	91.7	0.59	0.70	0.76	163.51
BFGC4 315MA (1)	90	75	874	7.0	2.4	2.4	2.3	850	983	92.5	93.4	93.4	0.94	0.96	0.86	170.24
BFGC3 315MA (2)	110	95	1063	7.4	2.6	2.9	4.3	1150	988	92.6	93.9	94.2	0.71	0.80	0.83	213.76
BFGC3 315MA (2)	132	115	1276	7.4	2.5	2.6	4.9	1250	988	93.0	94.2	94.4	0.71	0.80	0.83	255.96
BFGC3 315MA (2)	160	140	1547	7.4	2.4	2.5	6.2	1350	988	93.7	94.6	94.6	0.73	0.81	0.84	305.92
BFGC3 315LA (2)	200	175	1935	7.3	2.4	2.5	7.6	1500	987	94.2	95.0	94.9	0.74	0.81	0.84	381.19
BFGC3 355MA	200	175	1927	7.0	1.9	2.2	8.7	1850	991	93.8	95.0	95.2	0.73	0.80	0.83	384.57
BFGC3 355MA	250	220	2409	7.0	1.9	2.1	10.4	2000	991	94.4	95.4	95.6	0.72	0.80	0.83	478.70
BFGC3 355MA	280	245	2698	7.2	2.3	2.4	11.8	2250	991	94.6	95.6	95.8	0.72	0.80	0.84	528.65
BFGC3 400LA	315	275	3026	7.0	1.9	2.6	17.5	2700	994	95.4	96.1	96.2	0.76	0.83	0.85	585.29
BFGC3 400LA	355	310	3411	7.0	1.8	2.4	19.5	2900	994	95.7	96.3	96.4	0.78	0.83	0.85	658.25
BFGC3 400LA	400	350	3843	7.2	2.0	2.6	21.4	3100	994	95.2	96.0	96.3	0.73	0.81	0.84	751.29
BFGC3 400LA	450	395	4319	7.3	2.4	2.7	25.0	3250	995	95.0	96.0	96.3	0.71	0.80	0.84	845.21
VIII Pole - 750 min⁻¹																BFGC Line
BFGC8 71M	0.12	0.12	1.7	2.4	1.8	2.1	0.00101	16	655	42.0	44.5	45.0	0.34	0.64	0.71	0.57
BFGC8 80M	0.18	0.18	2.5	2.9	2.1	2.2	0.00191	25	680	57.0	60.0	61.0	0.30	0.55	0.65	0.69
BFGC8 80M	0.25	0.25	3.5	3.1	2.1	2.3	0.00239	27	680	54.0	57.0	58.0	0.32	0.61	0.68	0.96
BFGC8 90S	0.37	0.37	5.2	3.0	1.7	2	0.00323	32	685	61.0	65.0	66.0	0.30	0.55	0.65	1.31
BFGC8 90L	0.55	0.55	7.7	3.1	1.75	2.1	0.00419	35	685	66.0	69.0	69.0	0.30	0.57	0.66	1.83
BFGC8 100L	0.75	0.75	10.4	3.5	1.8	2.1	0.00657	43	690	66.0	69.0	69.0	0.33	0.62	0.69	2.39
BFGC8 100L	1.1	1.1	15	3.8	1.9	2.2	0.00857	46	695	67.0	70.0	70.0	0.34	0.63	0.70	3.41
BFGC8 112M	1.5	1.5	20	4.3	2	2.5	0.0158	60	710	76.0	78.0	78.0	0.30	0.59	0.67	4.36
BFGC8 132S	2.2	2.2	30	4.3	1.9	2.2	0.0261	79	710	78.0	79.0	79.0	0.36	0.67	0.74	5.72
BFGC8 132M	3	3	40	4.8	2.1	2.3	0.0345	85	710	79.0	80.0	80.0	0.38	0.70	0.76	7.50
BFGC8 160M	4	4	53	4.8	1.8	2.3	0.0688	146	720	81.0	83.0	82.6	0.34	0.64	0.71	10.4
BFGC8 160M	5.5	5.5	73	4.8	1.8	2.1	0.0894	160	715	83.0	84.0	84.0	0.34	0.64	0.71	14.0
BFGC8 160L	7.5	7.5	99	5.8	2.3	2.1	0.12	182	725	84.5	86.0	86.5	0.36	0.69	0.75	17.6
BFGC7 180L	11	9.7	147	4.2	1.8	2.5	0.23	236	715	85.0	87.0	86.7	0.36	0.67	0.74	26.0
BFGC7 200L	15	13.2	199	4.5	2.1	2.5	0.38	250	720	89.0	91.0	91.0	0.47	0.78	0.82	30.5
BFGC7 225S	18.5	15	249	4.6	2.1	2.6	0.57	310	710	89.0	91.0	91.0	0.42	0.73	0.79	39.1
BFGC7 225M	22	18.5	294	4.6	2.1	2.6	0.68	390	715	89.0	91.0	91.5	0.40	0.72	0.77	47.4
BFGC4 250M	30	25	389	6.0	2.2	2.2	0.82	450	737	90.5	91.2	90.8	0.59	0.69	0.74	68
BFGC4 280SA	37	30	479	5.7	2.4	2.4	0.99	610	737	89.4	90.3	90.0	0.59	0.69	0.74	84
BFGC4 280MA	45	35	582	6.5	2.6	2.6	1.3	630	739	91.1	92.1	92.0	0.57	0.68	0.73	102
BFGC4 315SA (1)	55	45	713	5.3	2.3	2.5	2.0	800	737	88.8	90.7	91.1	0.54	0.65	0.71	129
BFGC4 315MA (1)	75	65	973	5.2	2.6	2.6	2.4	900	736	90.8	92.0	92.1	0.56	0.66	0.71	174
BFGC3 315MA (2)	90	75	1161	7.1	2.8	2.9	5.5	1150	740	92.6	93.7	93.8	0.64	0.74	0.79	185
BFGC3 315MA (2)	110	95	1420	7.1	2.8	2.9	6.7	1250	740	93.1	93.8	93.8	0.66	0.75	0.79	226
BFGC3 315MA (2)	132	115	1704	7.0	2.5	2.5	7.9	1300	740	92.7	93.8	93.9	0.67	0.76	0.79	270
BFGC3 315MA (2)	160	140	2065	7.2	2.6	2.6	9.3	1450	740	92.6	93.8	94.0	0.65	0.75	0.79	327
BFGC3 355MA	160	140	2059	6.5	1.7	2.0	12.4	1900	742	93.8	94.7	94.9	0.70	0.78	0.81	316
BFGC3 355MA	200	175	2571	6.5	1.9	2.1	14.6	2000	743	94.1	95.0	95.2	0.68	0.77	0.81	394
BFGC3 355LA	250	220	3213	6.5	2.0	2.2	18.1	2350	743	94.5	95.3	95.4	0.68	0.77	0.81	492
BFGC3 400LA	280	245	3589	7.0	2.2	2.5	26.7	2600	745	95.4	96.0	96.0	0.73	0.80	0.82	540
BFGC3 400LA	315	275	4038	7.0	2.8	2.8	25.7	3000	745	95.4	96.3	96.5	0.68	0.77	0.82	605
BFGC3 400LA	355	310	4551	7.0	2.9	2.9	28.8	3200	745	94.7	95.6	95.9	0.66	0.76	0.81	694
BFGC3 400LA	400	350	5128	7.0	3.1	3.1	31.1	3450	745	95.0	95.7	95.9	0.67	0.76	0.81	782

(1) Copper bar rotor
(2) Special Terminal box
(3) Special Oversized Terminal box.
VSD Operation:
- For VSD, with quadratic torque application load, please consider maximum output related to the Dq=70K column although considering temperature rise 90K. (Valid for frame sizes 400 and below. For frame sizes 450 and 500, please refer to us)
- For applications with constant load torque, please contact WEG.

Notes:
- All values are according to IEC 60034-1 tolerances.
- This data can be changed without prior notice.

Hazardous Areas (IIC) Low Voltage Motors - Cast Iron Frame
Ex d / Ex de and BFGC Lines

IEC Frame	Output		Full load torque Tn (Nm)	Locked rotor current Is/In	Locked rotor torque Ts/Tn	Breakdown torque Tmax / Tn	Inertia J Kgm²	Weight Kg	Rated speed (rpm)	440 V / 60 Hz						
										% of full load						Full load current I_n (A)
										Efficiency η			Power Factor (Cos φ)			
	ΔT = 90K	ΔT = 70K								50	75	100	50	75	100	
VI Pole - 1200 min⁻¹															BFGC Line	
BFGC8 71M	0.22	0.22	1.8	3.1	2.1	2.3	0.00081	15	1116	56.0	59.5	60.0	0.30	0.55	0.65	0.73
BFGC8 71M	0.30	0.30	2.5	3.7	2.2	2.5	0.00101	16	1128	59.5	63.5	64.0	0.30	0.59	0.67	0.92
BFGC8 80M	0.44	0.44	3.8	3.6	2.3	2.5	0.00191	25	1110	62.0	66.5	67.0	0.34	0.65	0.72	1.2
BFGC8 80M	0.66	0.66	5.7	4.1	2.35	2.5	0.00239	27	1098	69.0	72.0	72.0	0.36	0.67	0.74	1.6
BFGC8 90S	0.90	0.90	7.8	3.7	1.8	2.1	0.00323	32	1098	67.0	70.0	70.0	0.36	0.67	0.74	2.3
BFGC8 90L	1.32	1.32	11	4.1	2.1	2.3	0.00419	35	1098	71.0	73.0	73.0	0.35	0.66	0.73	3.3
BFGC8 100L	1.8	1.8	15	4.7	2.2	2.3	0.00657	46	1116	74.0	76.0	76.0	0.40	0.72	0.77	4.0
BFGC8 112M	2.64	2.64	22	6.1	2.6	2.7	0.0158	60	1152	80.5	82.0	82.0	0.41	0.73	0.78	5.4
BFGC8 132S	3.6	3.6	29	6.3	2.3	2.5	0.0272	84	1170	81.0	83.0	83.5	0.42	0.73	0.79	7.2
BFGC8 132M	4.8	4.8	40	6.3	2.4	2.9	0.0323	88	1152	81.0	83.0	83.0	0.43	0.75	0.80	9.5
BFGC8 132M	6.6	6.6	55	6.1	2.3	2.9	0.0384	95	1146	81.0	83.0	83.5	0.45	0.76	0.81	12.8
BFGC8 160M	9	9	74	6.7	2.7	2.4	0.0812	161	1164	84.5	86.0	86.0	0.43	0.75	0.80	17.2
BFGC8 160L	13	11	109	6	2.2	2.3	0.109	182	1158	85.5	88.0	88.5	0.40	0.72	0.77	25.4
BFGC7 180L	18	15	146	5.2	1.9	2.3	0.227	236	1158	86.0	89.0	89.5	0.41	0.73	0.78	33.3
BFGC7 200L	22	18.5	180	6	1.9	2.4	0.244	240	1158	89.0	91.0	91.0	0.45	0.76	0.81	38.9
BFGC7 200L	26	22	214	6	1.9	2.4	0.279	250	1158	89.0	91.0	91.5	0.45	0.76	0.81	46.0
BFGC7 225M	35	30	289	5.8	1.8	2.5	0.661	390	1170	90.0	92.0	92.5	0.49	0.80	0.83	60.5
BFGC4 250M	40	35	324	6.2	2.4	2.6	0.68	450	1181	89.0	90.3	90.2	0.64	0.75	0.80	73
BFGC4 280SA	50	40	405	6.7	2.6	2.7	0.82	610	1180	90.0	91.0	90.8	0.68	0.77	0.81	89
BFGC4 280MA	60	50	485	7.0	2.3	2.3	1.1	650	1182	92.8	92.8	92.3	0.72	0.80	0.82	104
BFGC4 315SA (1)	85	70	687	7.3	2.8	3.0	2.0	700	1182	90.0	91.5	91.7	0.59	0.70	0.76	160
BFGC4 315MA (1)	100	85	810	7.0	2.4	2.4	2.3	850	1180	92.5	93.4	93.4	0.94	0.96	0.86	163
BFGC3 315MA (2)	120	105	967	7.4	2.6	2.9	4.3	1150	1186	92.6	93.9	94.2	0.71	0.80	0.83	201
BFGC3 315MA (2)	145	125	1168	7.4	2.5	2.6	4.9	1250	1186	93.0	94.2	94.4	0.71	0.80	0.83	243
BFGC3 315MA (2)	175	150	1410	7.4	2.4	2.5	6.2	1350	1186	93.7	94.6	94.6	0.73	0.81	0.84	289
BFGC3 315LA (2)	220	190	1774	7.3	2.4	2.5	7.6	1500	1184	94.2	95.0	94.9	0.74	0.81	0.84	362
BFGC3 355MA	220	190	1767	7.0	1.9	2.2	8.7	1850	1189	93.8	95.0	95.2	0.73	0.80	0.83	365
BFGC3 355MA	275	240	2208	7.0	1.9	2.1	10.4	2000	1189	94.4	95.4	95.6	0.72	0.80	0.83	455
BFGC3 355MA	305	265	2449	7.2	2.3	2.4	11.8	2250	1189	94.6	95.6	95.8	0.72	0.80	0.84	497
BFGC3 400LA	345	300	2762	7.0	1.9	2.6	17.5	2700	1193	95.4	96.1	96.2	0.76	0.83	0.85	554
BFGC3 400LA	390	340	3122	7.0	1.8	2.4	19.5	2900	1193	95.7	96.3	96.4	0.78	0.83	0.85	625
BFGC3 400LA	440	385	3523	7.2	2.0	2.6	21.4	3100	1193	95.2	96.0	96.3	0.73	0.81	0.84	714
BFGC3 400LA	495	435	3959	7.3	2.4	2.7	25.0	3250	1194	95.0	96.0	96.3	0.71	0.80	0.84	803
VIII Pole - 900 min⁻¹															BFGC Line	
BFGC8 71M	0.14	0.14	1.7	2.4	1.8	2.1	0.00101	16	786	42.0	44.5	45.0	0.34	0.64	0.71	0.59
BFGC8 80M	0.22	0.22	2.5	2.9	2.1	2.2	0.00191	25	816	57.0	60.0	61.0	0.30	0.55	0.65	0.71
BFGC8 80M	0.30	0.30	3.5	3.1	2.1	2.3	0.00239	27	816	54.0	57.0	58.0	0.32	0.61	0.68	1.0
BFGC8 90S	0.44	0.44	5.2	3.0	1.7	2.0	0.00323	32	822	61.0	65.0	66.0	0.30	0.55	0.65	1.4
BFGC8 90L	0.66	0.66	7.7	3.1	1.8	2.1	0.00419	35	822	66.0	69.0	69.0	0.30	0.57	0.66	1.9
BFGC8 100L	0.90	0.90	10	3.5	1.8	2.1	0.00657	43	828	66.0	69.0	69.0	0.33	0.62	0.69	2.5
BFGC8 100L	1.32	1.32	15	3.8	1.9	2.2	0.00857	46	834	67.0	70.0	70.0	0.34	0.63	0.70	3.5
BFGC8 112M	1.8	1.8	20	4.3	2.0	2.5	0.0158	60	852	76.0	78.0	78.0	0.30	0.59	0.67	4.5
BFGC8 132S	2.64	2.64	30	4.3	1.9	2.2	0.0261	79	852	78.0	79.0	79.0	0.36	0.67	0.74	5.9
BFGC8 132M	3.6	3.6	40	4.8	2.1	2.3	0.0345	85	852	79.0	80.0	80.0	0.38	0.70	0.76	7.8
BFGC8 160M	4.8	4.8	53	4.8	1.8	2.3	0.0688	146	864	81.0	83.0	82.6	0.34	0.64	0.71	10.7
BFGC8 160M	6.6	6.6	73	4.8	1.8	2.1	0.0894	160	858	83.0	84.0	84.0	0.34	0.64	0.71	14.5
BFGC8 160L	9	9	99	5.8	2.3	2.1	0.12	182	870	84.5	86.0	86.5	0.36	0.69	0.75	18.2
BFGC7 180L	13	11	144	4.2	1.8	2.5	0.23	236	858	85.0	87.0	86.7	0.36	0.67	0.74	26.5
BFGC7 200L	18	15	196	4.5	2.1	2.5	0.38	250	864	89.0	91.0	91.0	0.47	0.78	0.82	31.1
BFGC7 225S	22	18.5	245	4.6	2.1	2.6	0.57	310	852	89.0	91.0	91.0	0.42	0.73	0.79	39.8
BFGC7 225M	26	22	289	4.6	2.1	2.6	0.68	390	858	89.0	91.0	91.5	0.40	0.72	0.77	48.3
BFGC4 250M	30	25	324	6.0	2.2	2.2	0.82	450	884	90.5	91.2	90.8	0.59	0.69	0.74	59
BFGC4 280SA	40	35	432	5.7	2.4	2.4	0.99	610	884	89.4	90.3	90.0	0.59	0.69	0.74	79
BFGC4 280MA	50	40	538	6.5	2.6	2.6	1.3	630	887	91.1	92.1	92.0	0.57	0.68	0.73	98
BFGC4 315SA (1)	60	50	648	5.3	2.3	2.5	2.0	800	884	88.8	90.7	91.1	0.54	0.65	0.71	122
BFGC4 315MA (1)	85	70	919	5.2	2.6	2.6	2.4	900	883	90.8	92.0	92.1	0.56	0.66	0.71	171
BFGC3 315MA (2)	95	80	1022	7.1	2.8	2.9	5.5	1150	888	92.6	93.7	93.8	0.64	0.74	0.79	168
BFGC3 315MA (2)	120	105	1291	7.1	2.8	2.9	6.7	1250	888	93.1	93.8	93.8	0.66	0.75	0.79	212
BFGC3 315MA (2)	145	125	1559	7.0	2.5	2.5	7.9	1300	888	92.7	93.8	93.9	0.67	0.76	0.79	256
BFGC3 315MA (2)	175	150	1882	7.2	2.6	2.6	9.3	1450	888	92.6	93.8	94.0	0.65	0.75	0.79	309
BFGC3 355MA	175	150	1877	6.5	1.7	2.0	12.4	1900	890	93.8	94.7	94.9	0.70	0.78	0.81	299
BFGC3 355MA	220	190	2356	6.5	1.9	2.1	14.6	2000	892	94.1	95.0	95.2	0.68	0.77	0.81	374
BFGC3 355LA	275	240	2946	6.5	2.0	2.2	18.1	2350	892	94.5	95.3	95.4	0.68	0.77	0.81	467
BFGC3 400LA	305	265	3258	7.0	2.2	2.5	26.7	2600	894	95.4	96.0	96.0	0.73	0.80	0.82	508
BFGC3 400LA	345	300	3685	7.0	2.8	2.8	25.7	3000	894	95.4	96.3	96.5	0.68	0.77	0.82	572
BFGC3 400LA	390	340	4166	7.0	2.9	2.9	28.8	3200	894	94.7	95.6	95.9	0.66	0.76	0.81	659
BFGC3 400LA	440	385	4700	7.0	3.1	3.1	31.1	3450	894	95.0	95.7	95.9	0.67	0.76	0.81	743

Hazardous Areas (IIC) Low Voltage Motors - Cast Iron Frame

Mechanical Data - Ex d / Ex de

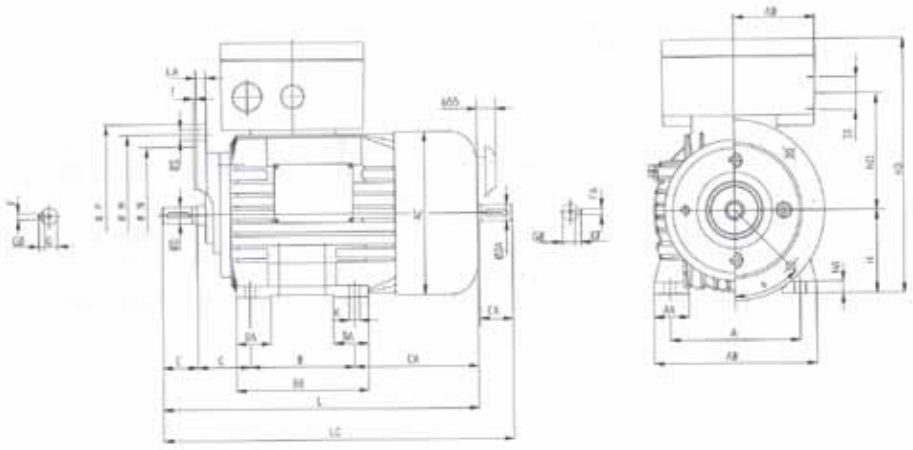

THIS DRAWING IS APPLICABLE TO IM1001, IM3001 OR IM2001 MOUNTING

IEC FRAME	A	AA	AB	AC	AD	B	BA	BB	C	CA	SHAFT DIMENSIONS										H	HA	HD (3)	h11 (3)	K	L	LC	S1	d1	d2	BEARINGS	
											D	E	F	G	GD	DA	EA	FA	GB	GF											D.E.	N.D.E
71	112	30	140	139	_	90	30	114	45	106	14	30	5	11	5	14	30	5	11	5	71	10	218	99	9	271	307	1XM20 X 1.5	M5	M5	6203	6203
80	125	32	160	157	79	100	35	130	50	127	19	40	6	15.5	6	19	40	6	15.5	6	80		249	132	10	317	362	1XM25 X 1.5	M6	M6	6204	6204
90S	140	35	180	177		125	60	155	56	129	24	50	8	20	7	24	50	8	20	7	90		271	140		360	415		M8	M8	6205	6205
90L																																
100L	160	45	205	195		140	45	175	63	153	28	60		24		28	60		24.0		100	17	288	153	12	416	481		M10	M10	6206	6206
112M	190	50	235	219				180	70	168									24		112	15	311	149		438	504					
132S	216	55	266	258		178	75	218	89	225	38	80	10	33	8	38	80	10	33	8	132	18	350	181		534	619	2XM25 X 1.5	M12	M12	6208	6208
132M										187																						
160M	254	60	312	310	144	210	90	300	108	239	42	110	12	37		42	110	12	37		160	21	436		14	667	785	2XM40 X 1.5	M16	M16	6309	6309
160L						254																										
180M	279	70	348	352	99	241	80	295	121	249	48		14	42	9	48		14	42	9	180		492	260		721	841				6310	6310
180L						279		333		250																761	881					
200L	318	80	398	392	128	305	90	395	133	269	55		16	49	10	55		16	49	10	200		543		18	817	937		M20	M20	6312	6312
225S	356		436	438		286		346	149	248	60	140	18	53	11	60	140	18	53	11	225		593	285		823	973				6313	6313
225M (1)						311		371		283																883	1033					
225M (2)											55	110	16	49	10	55	110	16	49	10						853	973					

IEC FRAME	"FF" FLANGE DIMENSIONS									NR. HOLES
	FLANGE	LA	M	N	P	T	S	α	b55	
71	FF-130	10	130	110	160	3.5	9	45°	21	4
80	FF-165		165	130	200		12		23	
90S/L									30	
100L	FF-215	11	215	180	250	4	14		35	
112M									35	
132S/M	FF-265	16	265	230	300				35	
160M/L	FF-300	19	300	250	350	5	18		36	
180M/L		15							58	
200L	FF-350	18	350	300	400				200	
225S	FF-400		400	350	450			22.5°	58	8
225M (1)									58	
225M (2)									58	

Notes:
(1) 1500, 1000 and 750 rpm
(2) 3000 rpm

- *All the dimensions are given in millimeters*
- *The customer must inform when application is vertical or on special coupling loads*
- *The values shown are subject to change without prior notice*
- *To obtain guaranteed values please refer to any local WEG office or it's distributor*
- *Shaft dimensions for II pole motors, only for direct coupling*
- *Drawings for 450 II pole frame motors available on request*
- *Execution with auxiliary terminal box and second end shaft available on request*
- *"EExde" execution dimensions on request*
- *For vertical mounting, the D.E. bearing is replaced by an angular contact type*

Hazardous Areas (IIC) Low Voltage Motors - Cast Iron Frame

Mechanical Data - Ex d / Ex de

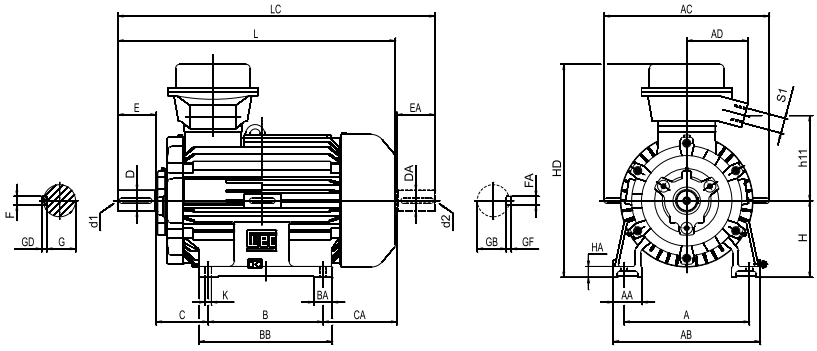

IEC FRAME	A	AA	AB	AC	AD	B	BA	BB	C	CA	SHAFT DIMENSIONS									
											D	E	F	G	GD	DA	EA	FA	GB	GF
250M (1)	406	100	506	-	244	349	-	406	168	207	65m6	140	18	58	11	60m6	140	18	53	11
250M (2)			506			349					60m6			53						
280SA (1)	457	105	537			368		438	190	236	75m6		20	67.5	12					
280SA (2)			537			368					65m6		18	58	11					
280MA (1)			537			419		525		272	75m6		20	67.5	12					
280MA (2)			537			419					65m6		18	58	11					
* 315SA (1)	508	120	628			406	120	526	216	326	80m6	170	22	71	14					
* 315SA (2)			628			406					65m6	140	18	58	11					
* 315MA (1)			628			457		577			80m6	170	22	71	14					
* 315MA (2)			628								65m6	140	18	58	11					

IEC FRAME	H	HA	HD	h11	K	L	LC	S1	d1	d2	BEARINGS	
											D.E.	N.D.E
250M (1)	250	32	748	307	24	856	1004	2xM63 x 1.5 + 1xM20 x 1.5	-		NU314	6314 C3
250M (2)												
280SA (1)	280	40	778			926	1074				NU316	6314 C3
280SA (2)											6314 C3	NU314
280MA (1)						1013	1161				NU316	6314 C3
280MA (2)											6314 C3	NU314
* 315SA (1)	315	45	845	339	28	1110	1258				NU317	6314 C3
* 315SA (2)						1080	1228				6314 C3	NU314
* 315MA (1)						1161	1309				NU317	6314 C3
* 315MA (2)						1131	1279				6314 C3	NU314

IEC FRAME	"FF" FLANGE DIMENSIONS									NR. HOLES
	FLANGE	LA	M	N	P	T	S	α	b55	
250M	FF-500	21	500	450	550	-	-	-	60	-
280SA/MA										
* 315SA/MA	FF-600	25	600	550	660	6	24		70	

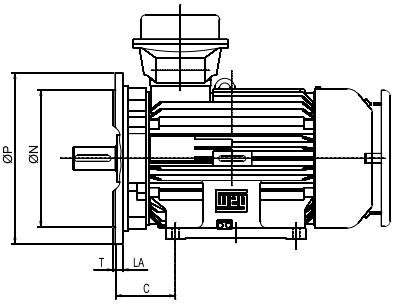

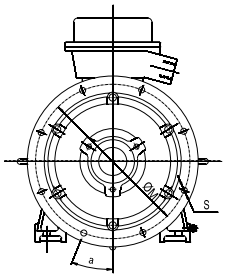

Notes:
(1) 1500, 1000 and 750 rpm
(2) 3000 rpm
(*) BFGC4 Series

Hazardous Areas (IIC) Low Voltage Motors - Cast Iron Frame

Mechanical Data - BFGC Line

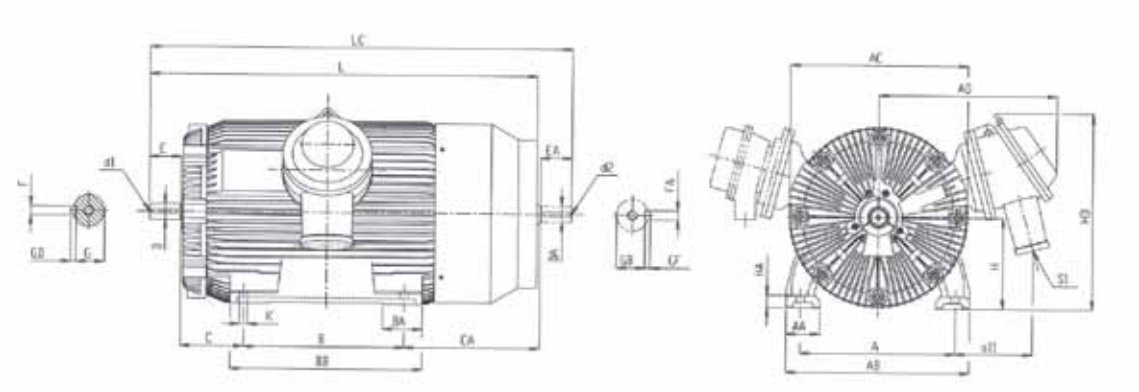

IEC FRAME	A	AA	AB	AC	AD	a11	B	BA	BB	C	CA	SHAFT DIMENSIONS									
												D	E	F	G	GD	DA	EA	FA	GB	GF
* 315MA (1)	508	130	632	622	716	360	457	150	613	216	426	90m6	170	25	81	14	60m6	140	18	53	11
* 315MA (2)									613			70m6	140	20	62.5	12					
* 315LA (1)							508	150	664			90m6	170	25	81	14					
* 315LA (2)									665			70m6	140	20	62.5	12					
355MA (1)	610	145	730	713	741	334	560	175	800	254	589	95m6	170	25	86	14	80m6	170	22	71	14
355MA (2)									800		800	70m6	140	20	62.5	12	60m6	140	18	53	11
355LA (1)							630		860		579	95m6	170	25	86	14	80m6	170	22	71	14
355LA (2)									860		860	70m6	140	20	62.5	12	60m6	140	18	53	11
400LA (1)	686	150	810	785.5	786	341	710		850	280	599	110m6	210	28	100	16	80m6	170	22	71	14
400LA (2)												70m6	140	20	62.5	12	60m6	140	18	53	11

IEC FRAME	H	HA	HD	K	L	LC	S1	d1	d2	BEARINGS		NOTES
										D.E.	N.D.E	
* 315MA (1)	315	43	735	28	1254	1409	2xM63x 1.5 + 1xM20x 1.5	DSM24	DSM20	NU2220	6317 C3	
* 315MA (2)					1224	1379		DSM20		6317 C3	NU317	(3)
* 315LA (1)					1305	1460		DSM24		NU2220	6317 C3	
* 315LA (2)					1275	1430		DSM20		6317 C3	NU317	(3)
355MA (1)	355	49	785		1558	1743		DSM24		NU320	6320 C3	
355MA (2)					1528	1683		DSM20 DSM20		6317 C3	NU317	(3)
355LA (1)					1618	1803		DSM24 DSM24		NU320	6320 C3	
355LA (2)					1588	1743		DSM20 DSM20		6317 C3	NU317	(3)
400LA (1)	400	55	860	35	1784	1969		DSM24 DSM24		NU324	6324 C3	
400LA (2)					1714	1869		DSM20 DSM20		6317 C3	NU317	(3)

Notes:
(1) 1500, 1000 and 750 rpm
(2) 3000 rpm
(3) For 60 Hz please refer to us
(*) BFGC3 Series

Hazardous Areas (IIC) Low Voltage Motors - Cast Iron Frame

Mechanical Data - BFGC Line

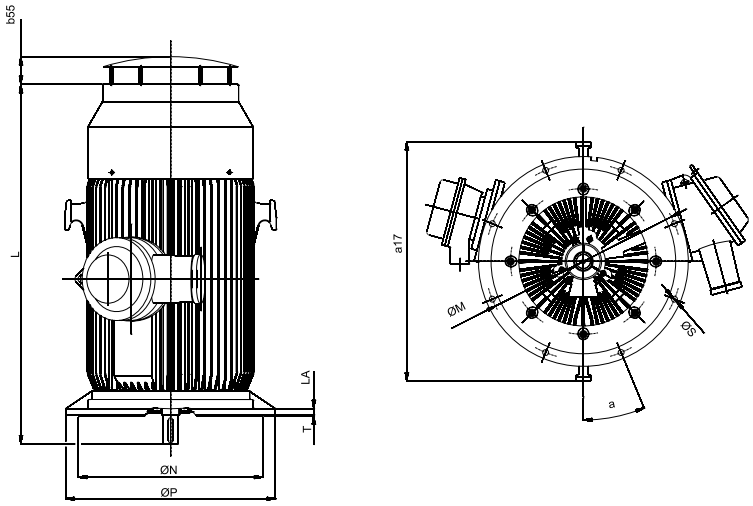

IEC FRAME	"FF" FLANGE DIMENSIONS									NR. HOLES	a17	BEARINGS		NOTES
	Flange	b55	LA	M	N	P	T	S	α			D.E.	N.D.E	
* 315MA/LA (1)	FF-600	116.5	22	600	550	660	6	24	22.5°	8	906	NU2220	6317 C3	
* 315MA/LA (2)												6317 C3	NU317	(3)
355MA/LA (1)	FF-740	125	25	740	680	800					952	NU320	6320 C3	
355MA/LA (2)												6317 C3	NU317	(3)
400LA (1)	FF-940	132	28	940		1000		28			1010	NU324	2x7322 BG	
400LA (2)												NU317	2x7316 BG	(3)

Notes:
(1) 1500, 1000 and 750 rpm
(2) 3000 rpm
(3) For 60 Hz please refer to us
(*) BFGC3 Series

- *All dimensions are given in millimeters*
- *The customer must inform when application is vertical or on special coupling loads*
- *The values shown are subject to change without prior notice*
- *To obtain guaranteed values please refer to any local WEG office or its distributor*
- *Shaft dimensions for II pole motors, only for direct coupling*
- *To change power terminal box side, please contact our nearest sales office*
- *Auxiliary terminal box and second end shaft available on request*
- *'EEx de' type dimensions on request*

Additional Information

Painting Plans

The painting plan given below, offer proper solution for each motors application.

Recommended Uses	Plan	Composition
Regular environment, not too severe, sheltered or not, for industrial purpose with Regular environment, not too severe, sheltered or not, for industrial purpose with low relative humidity, normal temperature variations and SO2 presence. Note: Not recommended for direct exposure to acid vapors, alkalis and solvents. Specific use recommendation: The 201 plan (standard plan) is indicated for normal manufacturing line motors.	201A	Primer Steel surface: A layer with 60 to 80 µm of polyester powder coating. Cast Iron Surface: a coating with 20 to 55 µm of synthetic alkyd primer. Finish Coat: one coating with 40 to 60 µm of synthetic alkyd enamel.
Severe industrial environment, sheltered or not. May have presence of SO2, vapors and solid contaminating and high humidity. Recommended for application in pulp and paper, mining and chemical industries.	202E	Primer Steel Surface: A layer with 60 to 80 µm of polyester powder coating. Cast Iron Surface: a coating with 20 to 55 µm of synthetic alkyd primer. Intermediate: a coating with 20 to 30 µm of isocyanate epoxy primer, only for FoFo and aluminium surfaces (except for surfaces with powder coating). Finish coat: a coating with 100 to 140µm of high thickness epoxy polyamid finishing.
Severe industrial environments, sheltered or not, may have presence of SO2, vapors and solid contaminating and high humidity. Specific use recommendations: Indicated for application in food processing motors – USA	202P	Primer Steel Surface: A layer with 60 to 80 µm of polyester powder coating. Cast Iron Surface: a coating with 20 to 55 µm of alkyd synthetic primer. Intermediate: a coating with 20 to 30 µm of isocyanate epoxy primer, only for FoFo and aluminium surfaces (except for surfaces with powder coating). Finish Coat: a coating with 60 to 100µm of aliphatic polyurethane primer
Regular environment, not too severe, sheltered or not, for industrial purpose, with low relative humidity, normal temperature variations and SO2 presence. Notes: 1- Not recommended for direct exposure to acid vapors, alkalis and solvents. 2- Do not apply the 203 plan in motors with steel plate frames.	203A	Primer Steel Surface: A layer with 60 to 80 µm of polyester powder coating. Cast Iron Surface: a coating with 20 to 55 µm of alkyd synthetic primer. Finish Coat: a coating with 50 to 70 µm of synthetic alkyd enamel.
Regular environments, not too severe and sheltered, for domestic purpose, with low relative humidity, and normal temperature variations. Note: Not recommended for direct exposure to acid vapors, alkalis and solvents. Specific use recommendations: For application in motors with steel plate frames, in which packaging process demands quick drying painting.	207A	Primer Steel Surface: A layer with 60 to 80 µm of polyester powder coating. Cast Iron Surface: a coating with 20 to 55 µm of alkyd synthetic primer Finish Coat: a coating with 30 to 40 µm of Synthetic Styrene Alkyd enamel
Regular environments, not too severe and sheltered, for domestic purpose, with low relative humidity, and normal temperature variations. Note: Not recommended for direct exposure to acid vapors, alkalis and solvents. Specific use recommendations: For application in motors with steel plate frames, in which packaging process demands quick drying painting.	207N	Primer Steel Surface: A layer with 60 to 80 µm of polyester powder coating. Cast Iron Surface: a coating with 20 to 55 µm of alkyd synthetic primer. Finish Coat: a coating with 30 to 40 µm of nitrocellulose finishing, (for motors with aluminium components, the finishing paint must be catalized with 610.0005).
Severe industrial environment, sheltered, may have presence of SO2, vapors and solid contaminating, high humidity and alkalis and solvent spills. Indicated for motors destinated to Petrobrás and its suppliers, for refineries purpose, as well as petrochemical industries that adopt the Petrobrás specifications.	211E	Primer Steel and Cast Iron Surface: a coating with 100 to 140 µm of Polyamide Epoxy Primer. Finish Coat: a coating with 100 to 140 µm each of Polyamide Epoxy Top Coat.
Severe industrial environment, sheltered or not, may have presence of SO2, vapors and solid contaminating and high humidity. Indicated for motors destinated to Petrobrás and its suppliers, for refineries purpose, as well as petrochemical industries that adopt the Petrobrás specifications.	211P	Primer Steel and Cast Iron Surface: a coating with 100 to 140 µm of Polyamide Epoxy Primer. Finish Coat: a coating with 70 to 100 µm each of aliphatic polyurethane enamel.
Aggressive Marine or Industrial Marine environments, sheltered, may have high humidity and alkalis and solvents spills. Indicated for applications in pulp and paper, mining and petrochemical industries. Note: Meets standard Petrobrás N1735 (condition 4).	212E	Primer Steel and Cast Iron Surface: a coating with 75 to 105 µm of zinc ethyl silicate (except for the aluminium parts). Intermediate: a coating with 100 to 140 µm of epoxy polyamide. Finish Coat: a coating with 100 to 140 µm each of Polyamide Epoxy Top Coat.
Aggressive Marine or Industrial Marine environments, sheltered, may have high humidity. Indicated for applications in pulp and paper, mining and petrochemical industries. Note: Meets standard Petrobrás N1735 (condition 4).	212P	Primer Steel and Cast Iron Surface: a coating with 75 to 105 µm of epoxy zinc rich (except for aluminium parts). Intermediate: a coating with 100 to 140 µm of epoxy polyamide. Finish Coat: a coating with 70 to 100 µm of Aliphatic Polyurethane Enamel.
Aggressive Marine or Industrial Marine environments, sheltered, may have high humidity. Indicated for applications in pulp and paper, mining and petrochemical industries. Note: Meets standard Petrobrás N1735 (condition 4).	213	PrimeSteel and Cast Iron Surface: a coating with 70 to 90 µm of zinc ethyl silicate. Intermediate: a coating with 35 to 50 µm of epoxy oxide iron. Finish Coat: a coating with 240 to 336 µm of Polyamide Epoxy Top Coat.

Notes:
1) For components manufactured in aluminium, primer application is not necessary, although, the component must be sand-blasted;
2) In case the client request the Plan 204 without finish coat, the motor must be provided painted with Primer and Intermediate composition;
3) Motors that have aluminium parts (cover and/or frames) must have these parts painted only with finish coat paint of Plan 207.

Standardized Mounting Configurations

The WEG electric motors are usually supplied in B3T mounting configuration with is suitable for horizontal operation.
They are also suitable to operate at any position. On request the same motors can be ordered as special including the following features: flange, special shaft, shaft down, footless, etc.
The chart below shows a range of different standardized mounting configurations. Each mounting gives a full description including configuration, reference, frame arrangement (foot mounted or footless), terminal box position (viewed from shaft end) and how motor is fixed.

Mounting	Reference					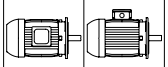				
	Reference	B3R	B3L	B3T	B5R	B5L	B5T	B35R	B35L	B35T	B14R
Details	Frame	with feet	with feet		without feet	without feet		with feet	with feet		without feet
	Shaft	right	left		right	left		right	left		right
	Mounting	base or rails	base or rails		flange FF	flange FF		base or flange FF	base or flange FF		flange FC
Mounting	Configuration						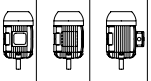	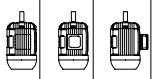		
	Reference	B14L	B14T	B34R	B34L	B34T	V5L	V5R	V5T	V6L	V6R	V6T	V1L	V3L
Details	Frame	without feet		with feet	with feet		with feet			with feet			without feet	without feet
	Shaft	left		right	left		down			up			Rown	up
	Mounting	flange FC		base or flange FC	base or flange FC		wall			wall			flange FF	flange FF
Mounting	Configuration	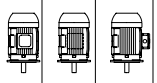	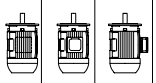			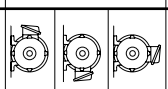	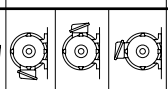	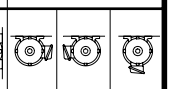		
	Reference	V15L	V15R	V15T	V36L	V36R	V36T	V18L	V19L	B6L	B6R	B6T	B7L	B7R	B7T	B8L	B8R	B8T
Details	Frame	with feet			with feet			without feet	without feet	with feet			with feet			with feet		
	Shaft	down			up			down	up	onward			onward			onward		
	Mounting	wall or flange FF			wall or flange FF			flange C	flange C	wall			wall			ceiling		

Notes

WEG Worldwide Operations

ARGENTINA
WEG EQUIPAMIENTOS ELECTRICOS S.A.
(Headquarters San Francisco-Cordoba)
Sgo. Pampiglione 4849
Parque Industrial San Francisco
2400 - San Francisco
Phone(s): +54 (3564) 421484
Fax: +54 (3564) 421459
info-ar@weg.net
www.weg.net/ar

AUSTRALIA
WEG AUSTRALIA PTY. LTD.
3 Dalmore Drive
Carribean Park Industrial Estate
Scoresby VIC 3179 - Melbourne
Phone(s): 61 (3) 9765 4600
Fax: 61 (3) 9753 2088
info-au@weg.net
www.weg.net/au

BELGIUM
WEG BENELUX S.A.
Rue de l'Industrie 30 D,
1400 Nivelles
Phone(s): + 32 (67) 88-8420
Fax: + 32 (67) 84-1748
info-be@weg.net
www.weg.net/be

CHILE
WEG CHILE S.A.
Los Canteros 8600
La Reina - Santiago
Phone(s): (56-2) 784 8900
Fax: (56-2) 784 8950
info-cl@weg.net
www.weg.net/cl

CHINA
WEG (NANTONG) ELECTRIC MOTOR MANUFACTURING Co., Ltd.
No. 128 - Xinkai Nan Road,
Nantong Economic and Technological Development Area
Jiangsu Province, China PC226010
Phone(s): 86 513 8598 9329
Fax: 86 513 8592 1310
info-cn@weg.net
www.weg.net/cn

COLOMBIA
WEG COLOMBIA LTDA
Calle 46A N82 - 54
Portería II - Bodega 7 - San Cayetano II - Bogotá
Phone(s): (57 1) 416 0166
Fax: (57 1) 416 2077
info-co@weg.net
www.weg.net/co

FRANCE
WEG FRANCE SAS
ZI de Chenes – Le Loup
13 Rue du Morellon – BP 738
38297 Saint Quentin Fallavier
Phone(s): +33 (0) 4 74 99 11 35
Fax: +33 (0) 4 74 99 11 44
info-fr@weg.net
www.weg.net/fr

GERMANY
WEG GERMANY GmbH
Alfred-Nobel-Str. 7-9
D-50226 Frechen
Phone(s): +49 (2234) 9 5353-0
Fax: +49 (2234) 9 5353-10
info-de@weg.net
www.weg.net/de

INDIA
WEG Electric (India) Pvt. Ltd.
#38, Ground Floor, 1st Main Road, Lower Palace Orchards,
Bangalore – 560 003
Phone(s): +91-80-4128 2007
+91-80-4128 2006
Fax: +91-80-2336 7624
info-in@weg.net
www.weg.net/in

ITALY
WEG ITALIA S.R.L.
V.le Brianza 20 - 20092 - Cinisello Balsamo - Milano
Phone(s): (39) 02 6129-3535
Fax: (39) 02 6601-3738
info-it@weg.net
www.weg.net/it

JAPAN
WEG ELECTRIC MOTORS JAPAN CO., LTD.
Matsumoto Bldg. 2F, 3-23-7 Kamata, Ohta-ku,
Tokyo, Japan 144-0052
Phone(s): (81) 3 3736-2998
Fax: (81) 3 3736-2995
info-jp@weg.net
www.weg.net/jp

MEXICO
WEG MEXICO, S.A. DE C.V.
Carretera Jorobas-Tula Km. 3.5,
Manzana 5, Lote 1
Fraccionamiento Parque Industrial - Huehuetoca,
Estado de México - C.P. 54680
Phone(s): + 52 (55) 5321 4275
Fax: + 52 (55) 5321 4262
info-mx@weg.net
www.weg.net/mx

NETHERLANDS
WEG NETHERLANDS
Sales Office of
WEG Benelux S.A.
Keulenstraat 4E
7418 ET Deventer
Phone(s): +31 (0) 570-620550
Fax: +31 (0) 570-620560
info-nl@weg.net
www.weg.net/nl

PORTUGAL
WEG EURO - INDÚSTRIA ELÉCTRICA, S.A.
Rua Eng. Frederico Ulrich
Apartado 6074
4476-908 - Maia
Phone(s): +351 229 477 705
Fax: +351 229 477 792
info-pt@weg.net
www.weg.net/pt

RUSSIA
WEG RUSSIA
Pochainskaya Str. 17
Nizhny Novgorod
603001 - Russia
Phone(s): +7-831-2780425
Fax: +7-831-2780424
info-ru@weg.net
www.weg.net/ru

SPAIN
WEG IBERIA S.L.
Avenida de la Industria,25
28823 Coslada - Madrid
Phone(s) : (34) 916 553 008
Fax : (34) 916 553 058
info-es@weg.net
www.weg.net/es

SINGAPORE
WEG SINGAPORE PTE LTD
159, Kampong Ampat,
#06-02A KA PLACE.
Singapore 368328.
Phone(s): +65 6858 9081
Fax: +65 6858 1081
info-sg@weg.net
www.weg.net/sg

SWEDEN
WEG SCANDINAVIA AB
Box 10196
Verkstadgatan 9
434 22 Kungsbacka
Phone(s): (46) 300 73400
Fax: (46) 300 70264
info-se@weg.net
www.weg.net/se

UK
WEG ELECTRIC MOTORS (U.K.) LTD.
28/29 Walkers Road
Manorside Industrial Estate
North Moons Moat - Redditch
Worcestershire B98 9HE
Phone(s): 44 (0)1527 596-748
Fax: 44 (0)1527 591-133
info-uk@weg.net
www.weg.net/uk

UNITED ARAB EMIRATES
WEG MIDDLE EAST FZE
JAFZA – JEBEL ALI FREE ZONE
Tower 18, 19th Floor,
Office LB181905
Dubai – United Arab Emirates
info-ae@weg.net
www.weg.net/ae

USA
WEG ELECTRIC CORP.
1327 Northbrook Parkway,
Suite 490
Suwanee 30024
Phone(s): 1-770-338-5656
Fax: 1-770-338-1632
info-us@weg.net
www.weg.net/us

VENEZUELA
WEG INDUSTRIAS VENEZUELA C.A.
Parcela T-4-A Transversal 9 Urb. Industrial Carabobo Catastral 79-101 Edf. ELIMECA Loc. ELIMECA, Zona Postal 2003, Valencia, Edo. Carabobo
Phone(s): (58) 241 838 9239
Fax: (58) 241 838 9239
info-ve@weg.net
www.weg.net/ve

WEG Equipamentos Elétricos S.A.
International Division
Av. Prefeito Waldemar Grubba, 3000
89256-900 - Jaraguá do Sul - SC - Brazil
Phone: 55 (47) 3276-4002
Fax: 55 (47) 3276-4060
www.weg.net

319.03/022009 - The values shown are subject to change without prior notice. The information is for reference only.