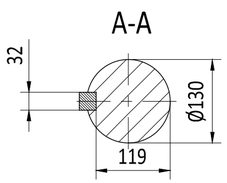

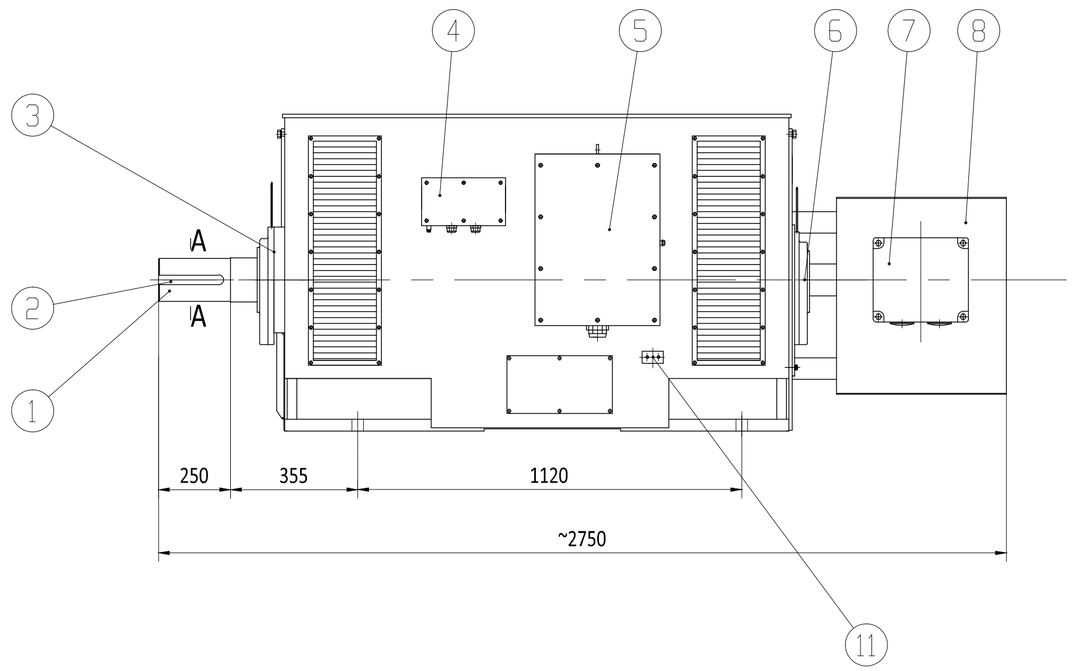

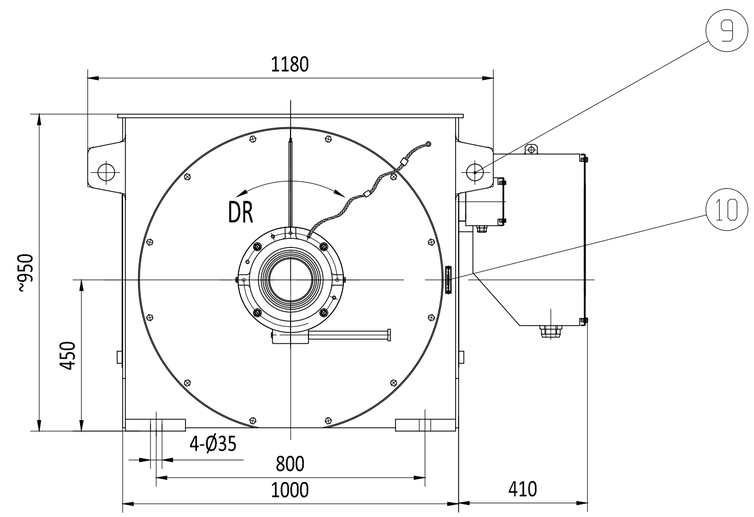

⚠ Preliminary information is for reference only,Please ask for the formal outline drawing after signing the contract. ⚠

Resistance element number

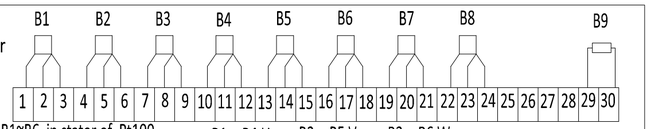

B1~B6 in stator of Pt100。 B1、B4 U， B2、B5 V， B3、B6 W
Warning Temperature120°C，Automatic power-off temperature130°C。
B7~B8 in bearing of Pt100（B7 for DE、B8 for NDE）
Warning Temperature90°C，Automatic power-off temperature95°C。
B9 Heater Single phase 220V、50Hz

Basis of the load

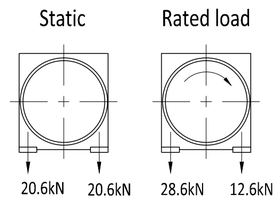

Suddenly two phase short circuit

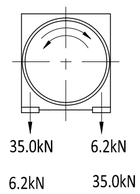

Technical data

Type	Power (kW)	Voltage (V)	Rated load(50Hz)			
			Stator current（A）	Speed（r/min）	Efficiency（%）	COSΦ
YR-450-6	660	380	1251	986	94.3	0.85

Installation	Cooling type	Protection grade	Insulation class	Frequency（Hz）	Altitude
IMB3	IC01	IP21	F	50	Under 1000m

Environment temperature	Rotor voltage（V）	Rotor current（A）	Tm/Tn	Stator connection	Rotor connection	S.F	Duty	Weight (kg)
-15℃~40℃			1.8	△	Y	1.0	S1	4200

No.	Code	Designation	QTY	Note
11		Motor earthing device	2	Left and right sides is symmetrical
10		Turning indicator	1	
9		Motor lifting lugs	4	
8		Slip ring cover	1	IP23
7		Rotor terminal box	1	
6		Bearing assembly(NDE)	1	Non-stop oil injection and discharge
5		Stator terminal box	1	
4		Auxiliary terminal box	1	
3		Bearing assembly(DE)	1	Non-stop oil injection and discharge
2		Fitting key	1	
1		Shaft end	1	

ASSEMBLY TOLERANCE

Nominal dimensions range	Tolerance
0<D≤30	±2.0
30<D≤120	±5.0
120<D≤400	±10.0
400<D≤1000	±20.0
1000<D≤2000	±30.0
2000<D≤4000	±35.0
4000<D≤8000	±40.0

Unit: mm
Standard:IEC60034
Language:English

Rev.	QTY	Mark	Date	Size	A2
Designer				Standard	
Check				Approve	
Examine				Date	2023-08-14

Outline drawing

YR450-6

660kW 380V 50Hz

23-08-14013

Weight（kg）	Scale
	NTS

seipee