23-07-12007

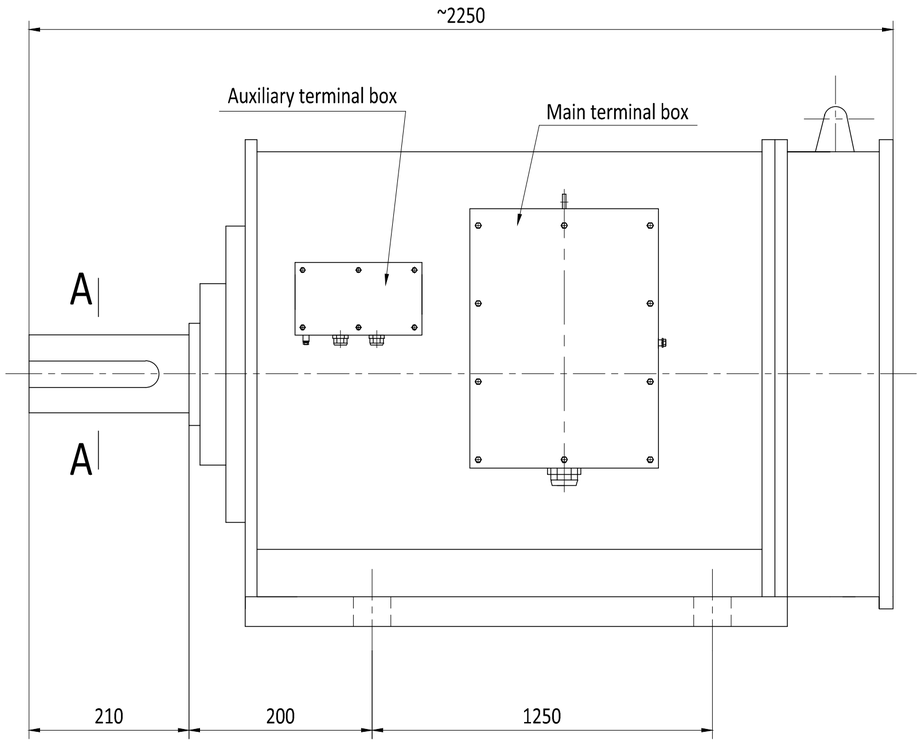

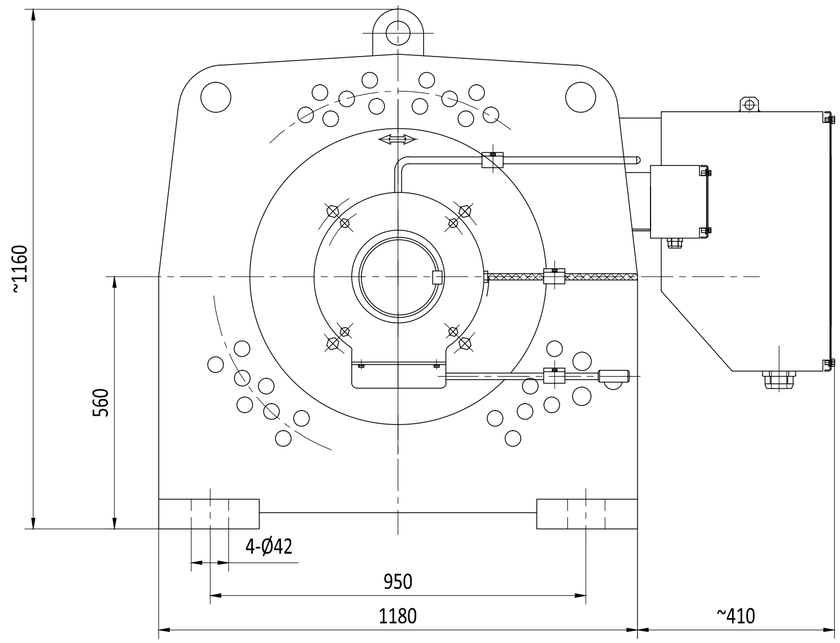

A-A

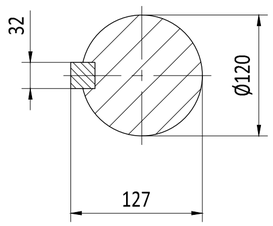

Preliminary information is for reference only,Please ask for the formal outline drawing after signing the contract.

Basis of the load

Static Rated load

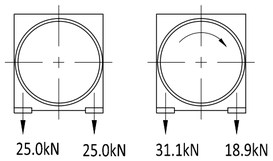

Suddenly two phase short circuit

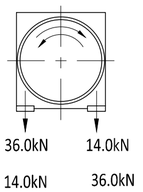

seipee® S.p.A.

Resistance element number

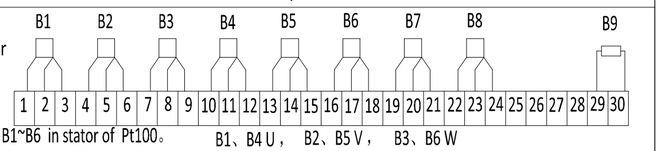

B1~B6 in stator of Pt100。 B1、B4 U， B2、B5 V， B3、B6 W
Warning Temperature120°C，Automatic power-off temperature130°C。
B7~B8 in bearing of Pt100（B7 for DE、B8 for NDE）
Warning Temperature90°C，Automatic power-off temperature95°C。
B9 Heater Single phase 220V、50Hz

Technical data

Type	Power (kW)	Voltage (V)	Rated load(50Hz)			
			Stator current（A）	Speed（r/min）	Efficiency（%）	COSΦ
YBKK-560-8	450	3000	115	743	93.8	0.8

Installation	Cooling type	Protection grade	Insulation class	Frequency（Hz）	Altitude
IMB3	IC511	IP55	F	50	Under 1000m

Environment temperature	Ist/In	Tst/Tn	Tm/Tn	Stator connection	S.F	Duty	Weight (kg)
-15℃~40℃	5.5	0.8	1.8	Y	1.0	S1	5100

ASSEMBLY TOLERANCE	
Nominal dimensions range	Tolerance
0<D≤30	±2.0
30<D≤120	±5.0
120<D≤400	±10.0
400<D≤1000	±20.0
1000<D≤2000	±30.0
2000<D≤4000	±35.0
4000<D≤8000	±40.0

Unit: mm
Standard:IEC60034
Language:English

Rev.	QTY	Mark	Date	Size	A2
Designer				Standard	
Check				Approve	
Examine				Date	2023-07-12

Outline drawing

YBKK560-8

450kW 3kV 50Hz

23-07-12007

Weight（kg）	Scale
	NTS