N.Rev.	Note di revisione	Data	Firma	Controllo

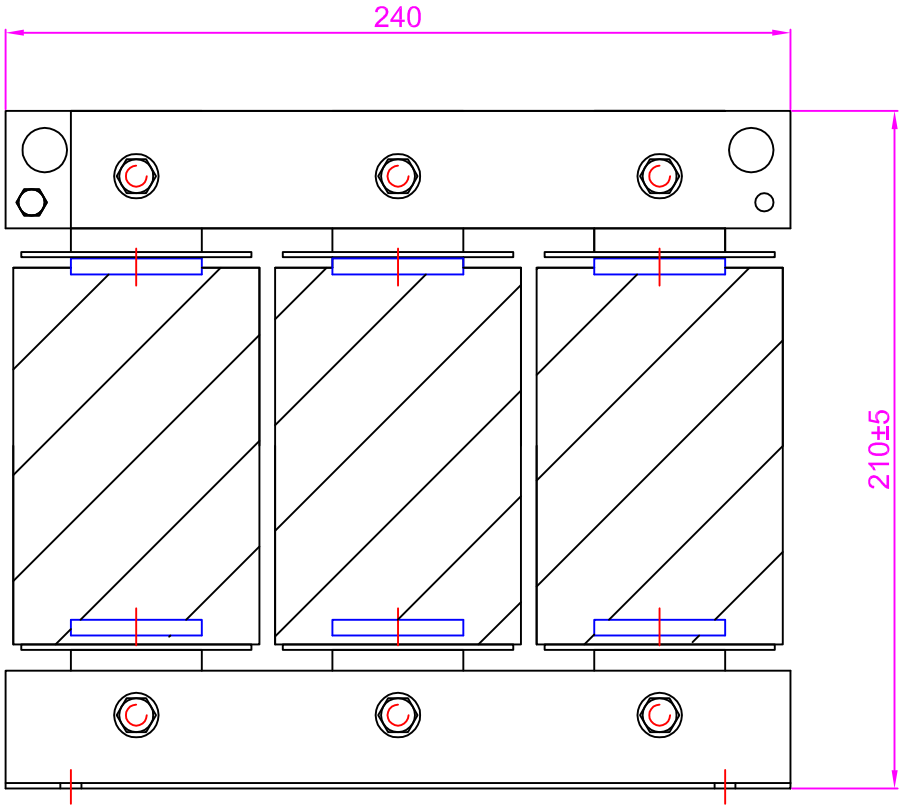

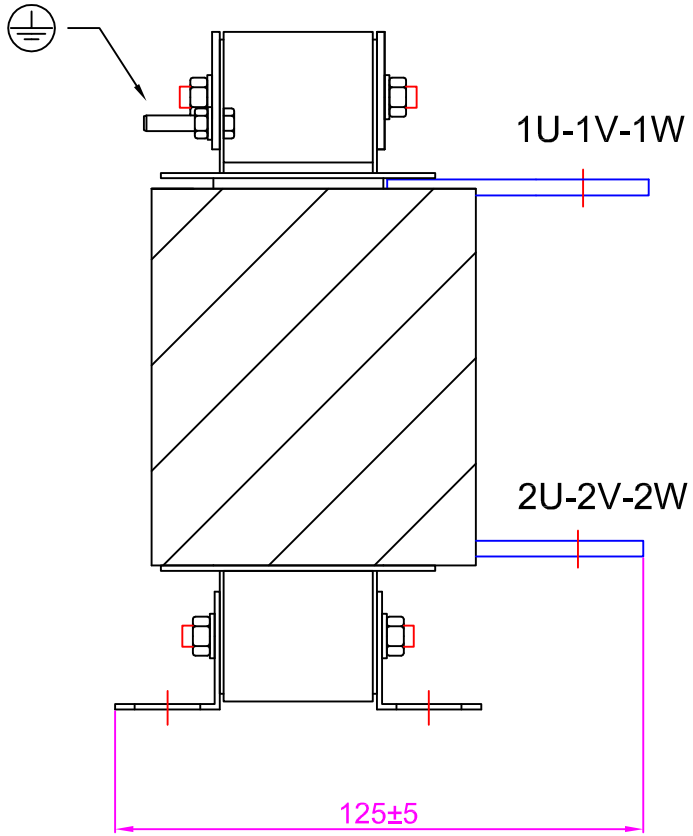

PESO : 11,5Kg

Quantità/Quantity	Materiale/Material	Data/Date	Scala/Scale	No
	/	07/10/14	NO	

Titolo/Titol

REATTANZA 3-FASE
Ln=0,2mH In=90A Isat=135A 50/60Hz
Vs. cod. 00218C

Codice/Code

Dis.Numero/Dwg.N.

Degree of precision UNI 5307	Group of dimension					
	up to 6	over 6 up to 30	over 30 up to 120	over 120 up to 315	over 315 up to 1000	over 1000 up to 2000
Gross	± 0.2	± 0.5	± 0.8	± 1.2	± 2	± 3
Medium	± 0.1	± 0.2	± 0.3	± 0.5	± 0.8	± 1.2
Precise	± 0.05	± 0.1	± 0.15	± 0.2	± 0.3	± 0.5
Quotas without indication of tollerance: gross degree of precision						