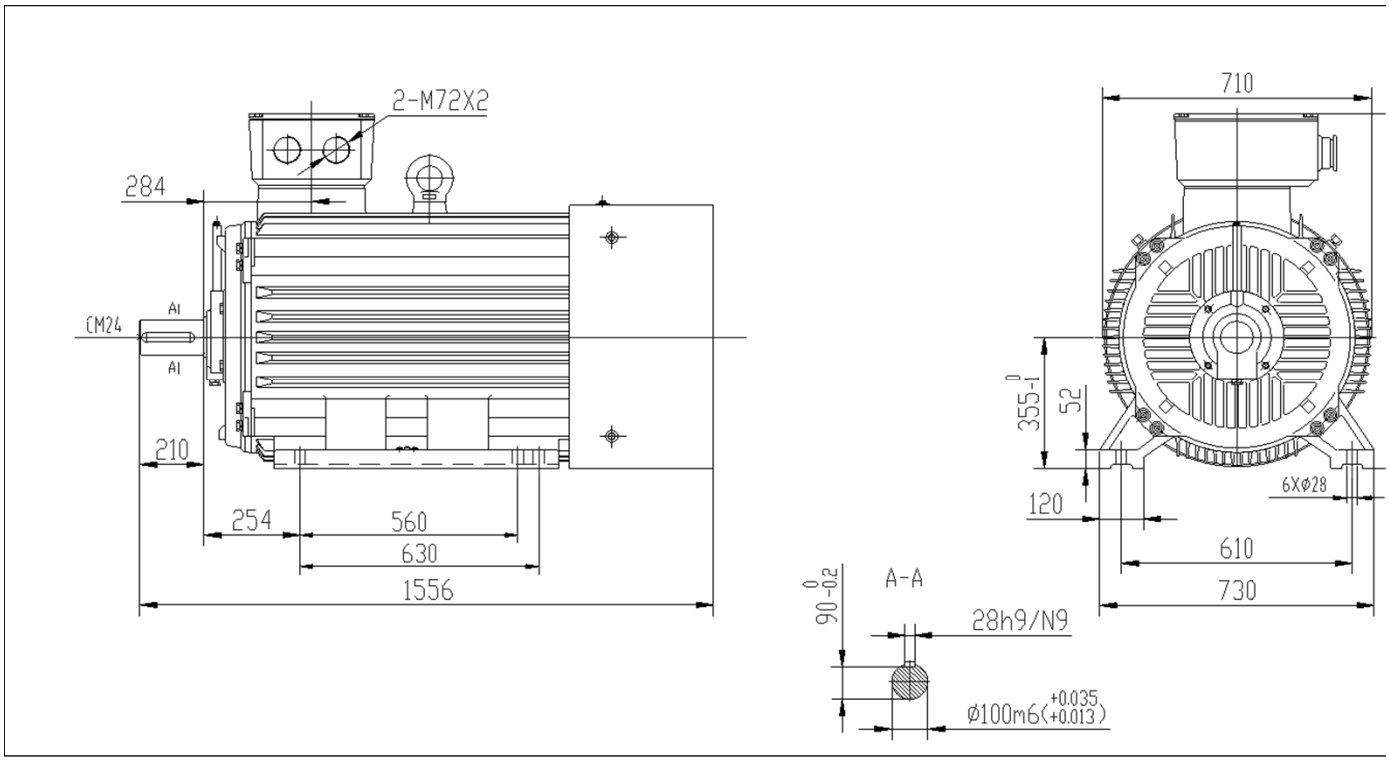

Specification	**IEC 60034-1**			
Manufacturer	**comelmar motors**			
Motor type	**CM 355LY-4**			
Rated power	**355,00**	kW	**S1**	duty
Speed	**1487**	r.p.m		
Voltage	**400/690**	V		
Frequency	**50**	Hz		
Connection	**△/Y**			
Amps full load	**537/311**	A		
Amps no-load$_{(400V)}$		A		
Enclosure	**IP 55**			
Insulation Class	**F (temp. rise B (80 K))**			
Cooling	**IC411**			
Max. coolant temp.	**40°C**			
Max. altitude	**1.000**	mtr, above sea level		
Comment				
Cable entries	**2 x M72x2**			
Feature	**Cast-iron motor**			
Rotor Inertia	**9,1000**	kgm^2		
Weight	**2000**	kg		
Catalog no.				
Warranty				

Efficiency class					
Load data	100%	75%	50%	25%	
Efficiency					%
Power factor					
Sound pressure level (1m)					dB(A)
Resistance R_{20} (open)					W
Full load torque					Nm
DOL Starting torque vs FL torque					
DOL Pull up torque vs FL torque					
DOL Pull out torque vs FL torque					
DOL Starting current vs FL current					
Grease type				**SRI-2#**	
Grease Quantity DE				**80,00**	gr
Grease Quantity NDE				**80,00**	gr
Grease Interval			**2000**		h
Bearing DE			**6322 C3**		
Bearing NDE			**6320 VL0241 C3**		