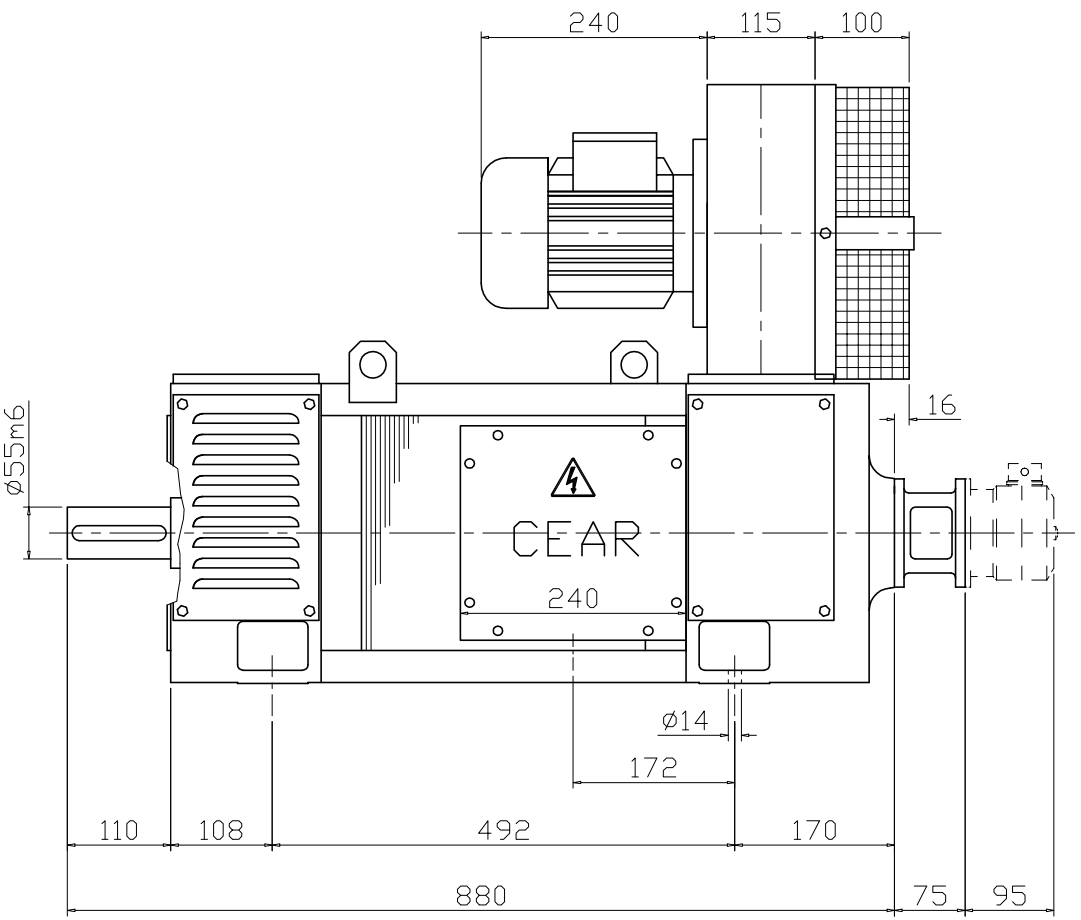


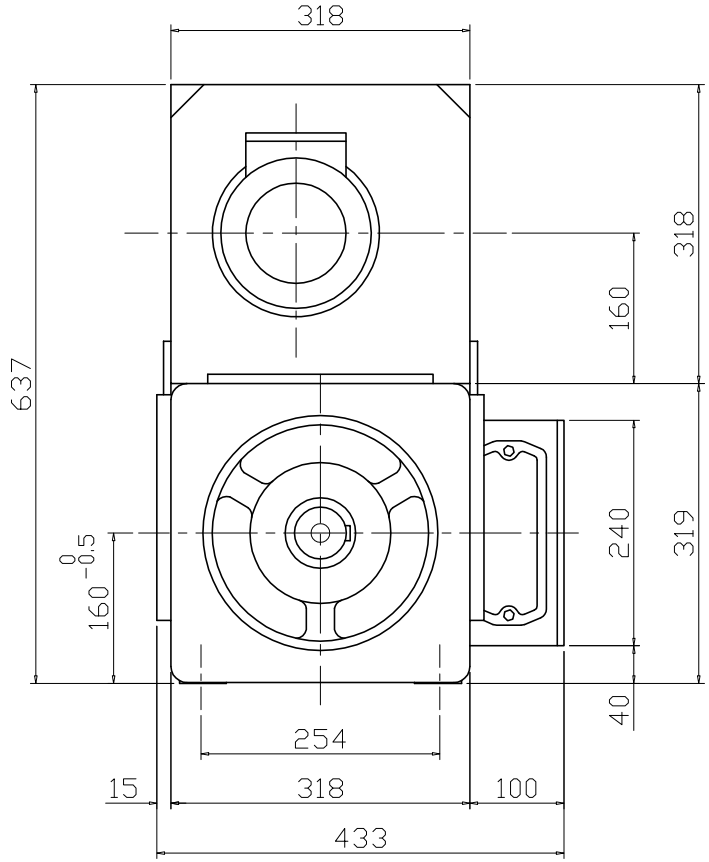


SHAFT END

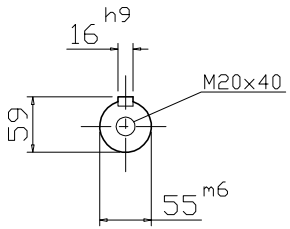


| Revision | |
|---|---|
| 04 | |
| 03 | |
| 02 | |
| 01 | |

| | | |
|---|---|---|
| CEAR DC MOTOR MGL 160 P | | |
| FORM COSTR.: B3 PROTECTION: IP 23 | Drawing: D02 | Date : 29.07.2019 |
| COOLING: IC06 | | |
| SPECIAL SHAFT END Ø55x110 | | |
| TERMINAL BOARD ON THE RIGHT - D.T. STANDARD | 160 IN 7509 | |