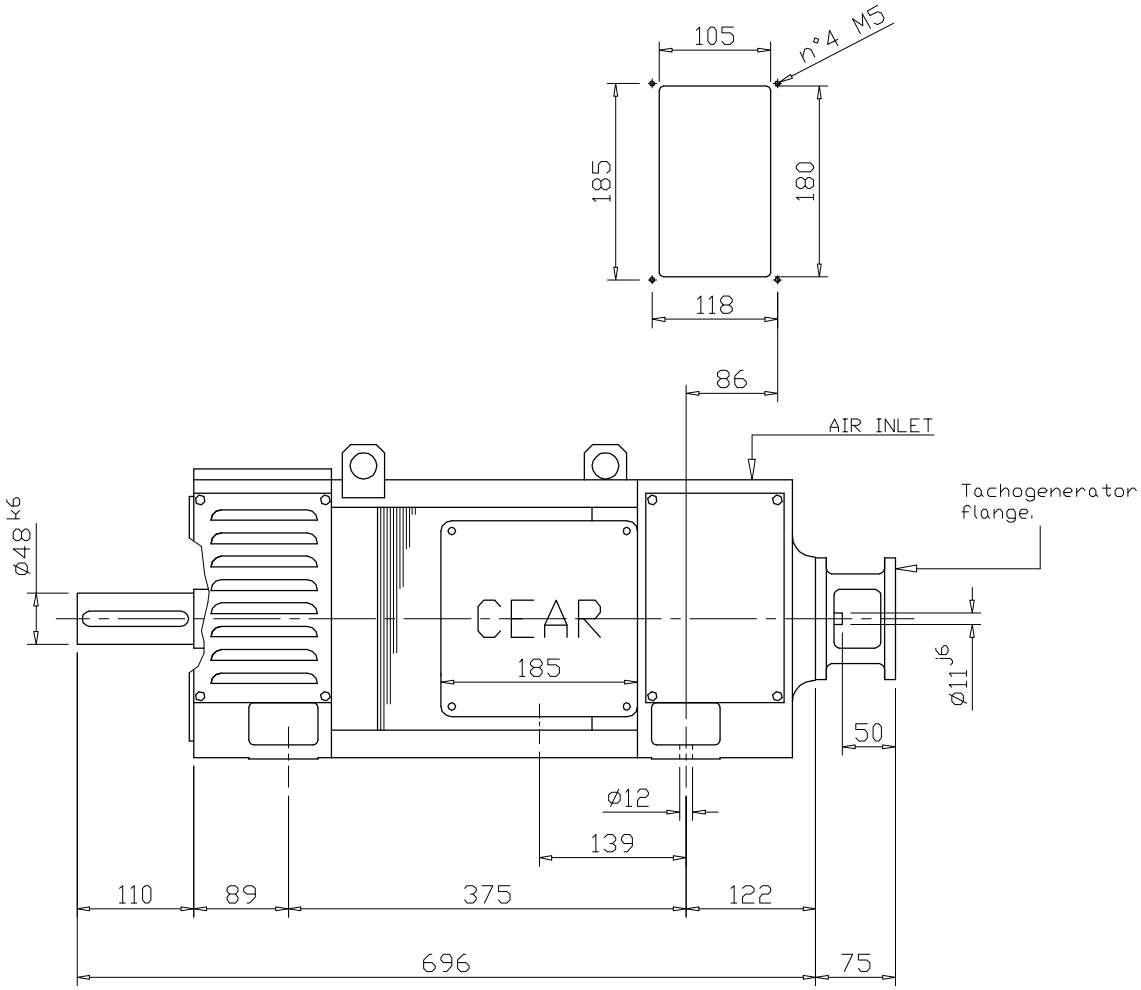

VENTILATION DATA:
Air flow 10 $m^3/1'$
Pressure 80 mmH_2O

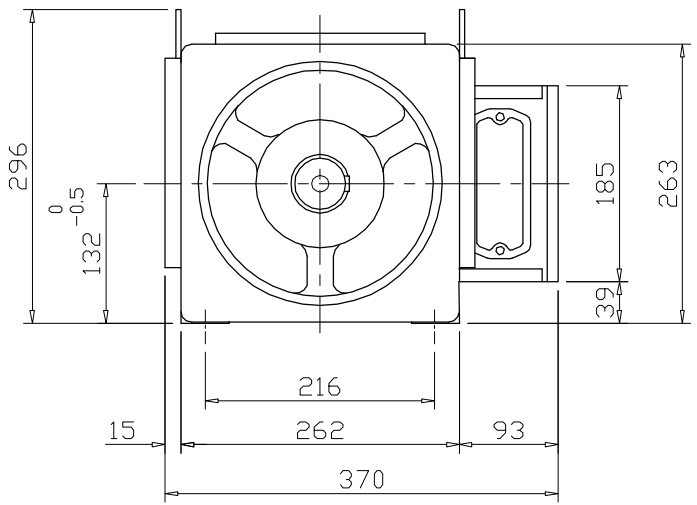

SHAFT END

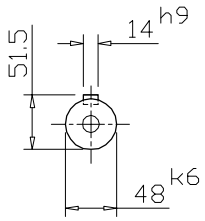

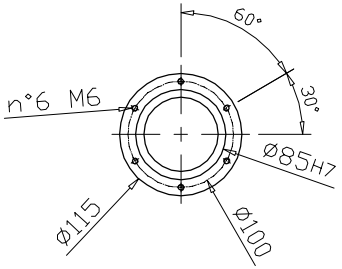

Tachogenerator flange.
Joint 11-11

Revision	
04	
03	
02	
01	

CEAR **DC MOTOR MGL 132 M**

FORM COSTR.: B3 special PROTECTION: IP 23

COOLING: IC17

STANDARD SHAFT END Ø48x110

TERMINAL BOARD ON THE RIGHT - D.T. STANDARD

Drawing:	Date :
D02	08.05.2018

132 IN 7093