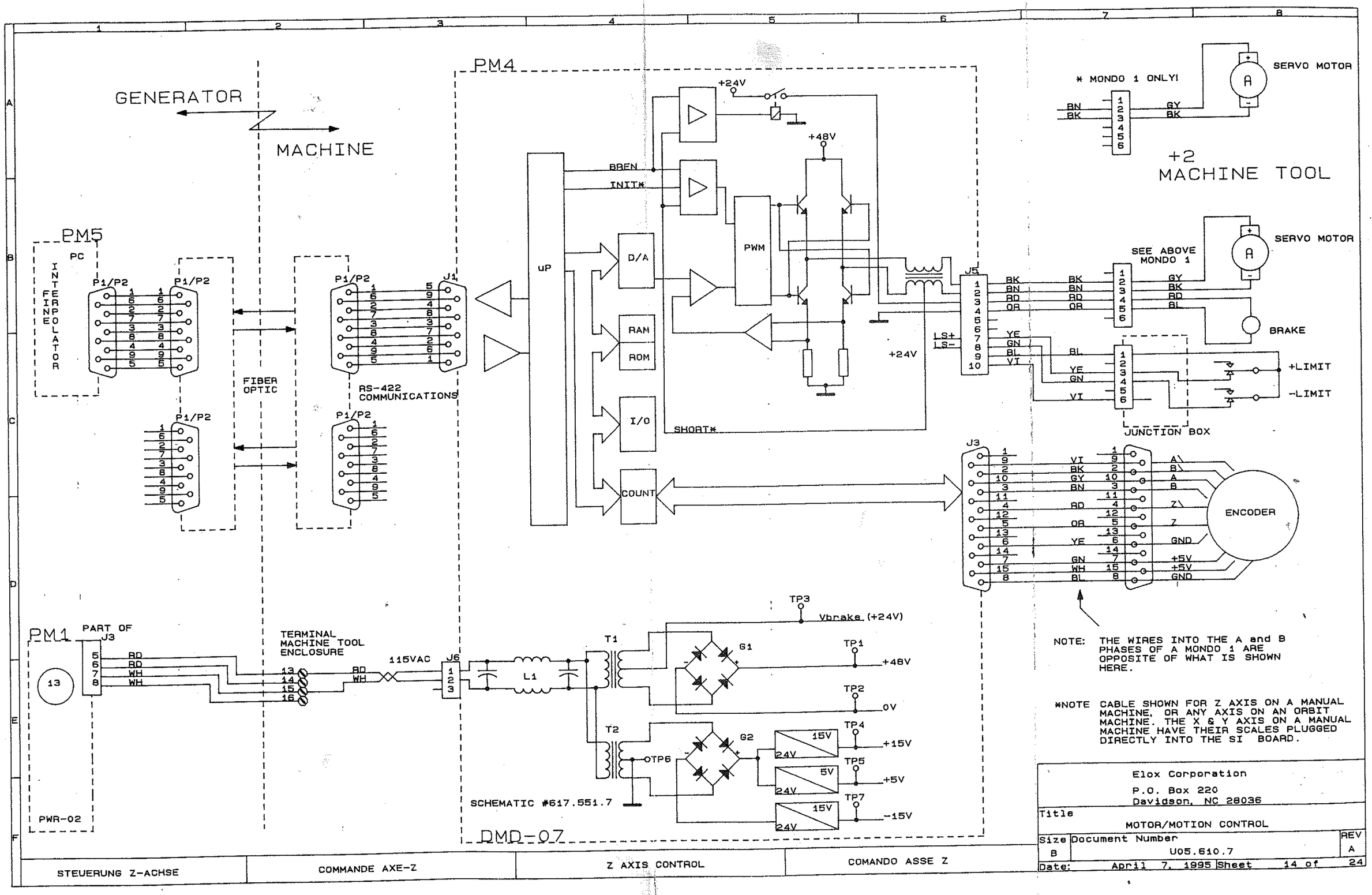

NOTE: THE WIRES INTO THE A and B PHASES OF A MONDO 1 ARE OPPOSITE OF WHAT IS SHOWN HERE.

*NOTE CABLE SHOWN FOR Z AXIS ON A MANUAL MACHINE. OR ANY AXIS ON AN ORBIT MACHINE. THE X & Y AXIS ON A MANUAL MACHINE HAVE THEIR SCALES PLUGGED DIRECTLY INTO THE SI BOARD.

Elox Corporation
P.O. Box 220
Davidson, NC 28036

Title: MOTOR/MOTION CONTROL

Size: B | Document Number: U05.610.7 | REV: A

Date: April 7, 1995 | Sheet 14 of 24