229FEB8997 08.58

FMA

CNC MULTI WHEEL GRINDER.

LANDIS LUND M/C No. 318-89, EY01529.

LANDIS SYSTEM 3200 CONTROLLER

DESCRIPTION	PAGINA N. PAGE No	DESCRIZIONE
FRONT SHEET	1	FOGI FRONTALE
3 PHASE POWER WIRING	2 - 18	ELECTRICO TRIFASE
RELAY SCHEMATIC	19 - 36	SCHEMI ELECTRICI RELE'
LOADER INTERLOCKS	37 - 38	INTERBLOCCHI CARICO/SCHRICO (CARICATORE)
POST PROCESS GAUGE (E50)	39	CALIBRO POST PROCESS MARPOSS E50
FMA MONITORING	40	MONITORIZZAZIONE FMA
P.C. INPUTS	41 - 64	P.C. INGRESSI
P.C. OUTPUTS	65 - 76	P.C. USCITE
TACHO AND ENCODER CONNECTIONS	77 - 86	CONNESSIONI ENCODER E TACHIM.
WHEEL SPEED MONITOR CONNECTIONS	87	CONNESSIONI MONITOR VELOC. MOLA
PORTABLE JOG STATION CONNECTIONS	88	STAZIONE "JOG" PORTATILE CONNESSIONI
M.M.I. CONNECTIONS	89	CONNESSIONI M.M.I.
INDRAMAT RAC1 PARAMETERS	90	PARAMETRI RAC1 INDRAMAT
MASTER PROCESSOR BOARD SETTINGS	91	SETTAGGIO SCHEDA PROCESSORE MASTER
SYSTEM 3200 ADDRESS SWITCH SETTINGS	92	SETTAGGIO INDIRIZZI SISTEMA 3200
OUT OF SEQUENCE WIRE AND RELAY NUMBERS	93	TABELLA DEI CAVI "FUORI SEQUENZA"E RELE'
CABINET No 1 LAYOUT	94	DISPOSIZIONE DELL' ARMADIO No1
CABINET No 2 LAYOUT	95	DESPOSIZIONE DELL' ARMADIO No2
PLUG BOX LAYOUT	96	DISPOSIZIONE CONNESSIONI CABINE
CABINET No 3 LAYOUT	97	DESPOSIZIONE DELL' ARMADIO No3
CABINET TERMINAL RAILS	98	MORSETTIERA CABINE
OILFLEX CABLE LENGTHS	99 - 100	CAVI MACCHINA LUNGHEZZA
SERVO MOTOR CABLES	101	CAVI SERVOMOTORI
CABINET CABLES TO THE MACHINE	102 - 107	CAVI DA CABINE A MACCHINA
LOADER, POST PROCESS AND GAUGE CABLES	108	CAVI CARICATORE / CALIBRO POST PROCESS / MONITORIZZAZIONE FMAS
CABLES MACHINE JUNCTION BOX `A' TO THE CONSOLE	109 -110	CAVI DA CABINA MACCHINA 'A' ALLA CONSOLLE
MACHINE JUNCTION BOX `A'	111	CABINA MACCHINA DI GIUNZIONE 'A'
MACHINE WIRING	112 - 122	DIAGRAMMA CAVI DELLA MACCHINA
SPARE SHEET	123	FOGLIO DISCORTA
CABLE LIST	124 - 125	ELENCO CAVI
CABLE MAP INTERNAL	126	MAPPA CAVI INTERNI
CABLE MAP EXTERNAL	127	MAPPA CAVI ESTERNI
EARTH DIAGRAM	128	DIAGRAMMA MESSA A TERRA
LOCATION DIAGRAM	129	DIAGRAMMA POSIZIONE
SPARE SHEET	130	FOGLIO DISCORTA
STOCK LIST	131 - 150	LISTA DEL COMPONENTI

DRAWN RDP					KE	KE	KE	KE	KE	KE	KE	KE	KE	NAME	CHANGES	TITLE
CHECKED					17-02-97	17-02-97	17-02-97	17-02-97	17-02-97	17-02-97	17-02-97	17-02-97	17-02-97	DATE		ELECTRICAL SCHEMATIC DIAGRAM *POTENZA ELETTRICA TRIFASE*
APPROVED					W/O 96595	W/O 97583	W/O 97287	W/O 97662	W/O 97645	W/O 96507	W/O 96950	W/O 97032		C.I.		M/C No 318-89

FMA

EY01529

MICROFILM

REF.DRG –

SHEET 1

SHEETS 150

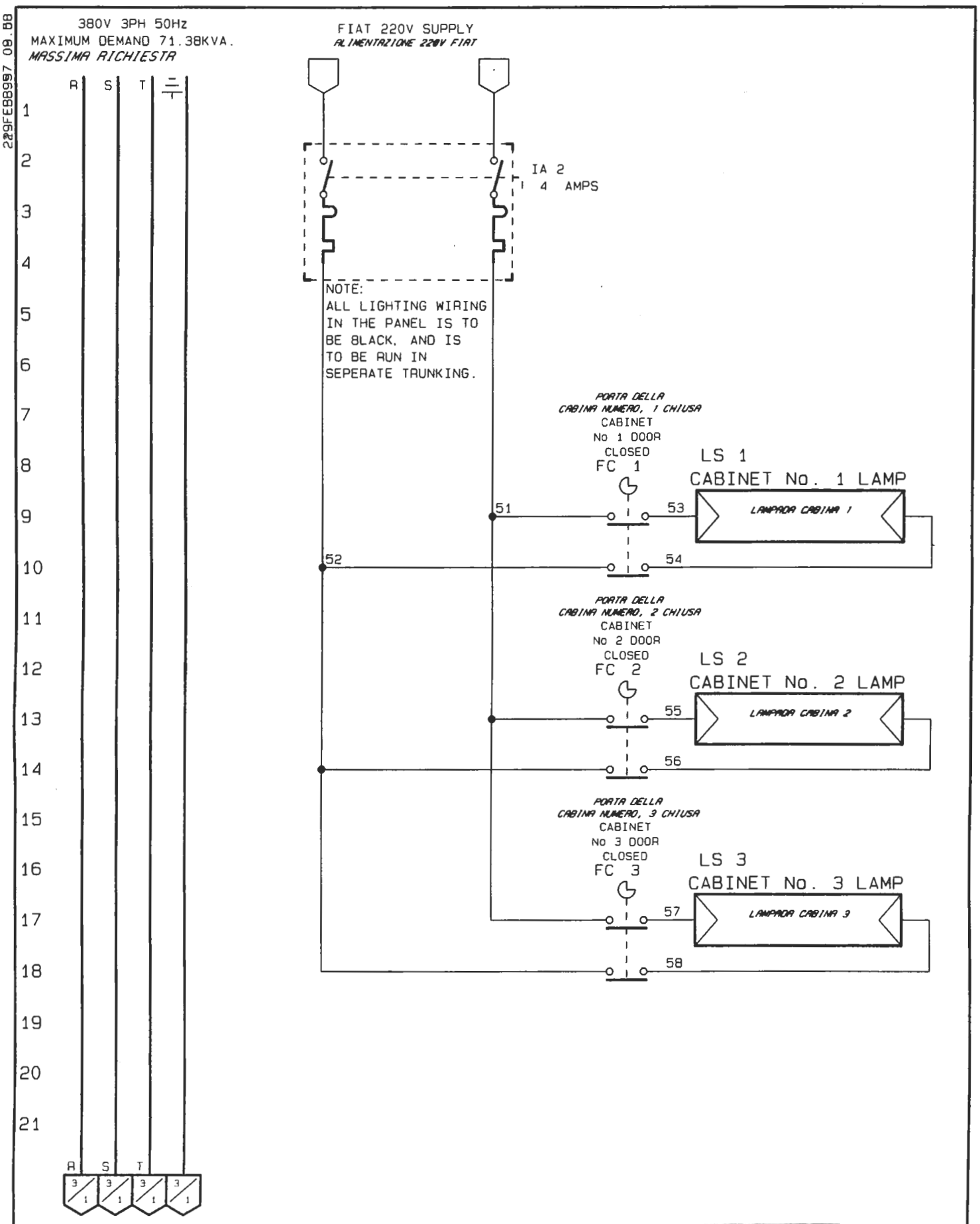

DRAWN RDP																							
CHECKED																							
APPROVED																							
LAYOUT APP'D																							
NAME	KE	KE	KE	KE	KE	KE	KE	KE	KE	KE	KE	KE	KE	KE	KE	KE	KE	KE	KE	KE	KE	KE	KE
DATE	17-02-97	17-02-97	17-02-97	17-02-97	17-02-97	17-02-97	17-02-97	17-02-97	17-02-97	17-02-97	17-02-97	17-02-97	17-02-97	17-02-97	17-02-97	17-02-97	17-02-97	17-02-97	17-02-97	17-02-97	17-02-97	17-02-97	17-02-97
C.I.	W/O 96896	W/O 96895	W/O 97287	W/O 97282	W/O 97282	W/O 97282	W/O 97282	W/O 97282	W/O 97282	W/O 97282	W/O 97282	W/O 97282	W/O 97282	W/O 97282	W/O 97282	W/O 97282	W/O 97282	W/O 97282	W/O 97282	W/O 97282	W/O 97282	W/O 97282	W/O 97032

CHANGES

TITLE

3 PHASE POWER WIRING.

ELECTRICO TRIFASE

M/C No 318-89

FMA

EY01529

MICROFILM

REF.DRG -

SHEET 2

SHEETS 150

229FEB997 08.08

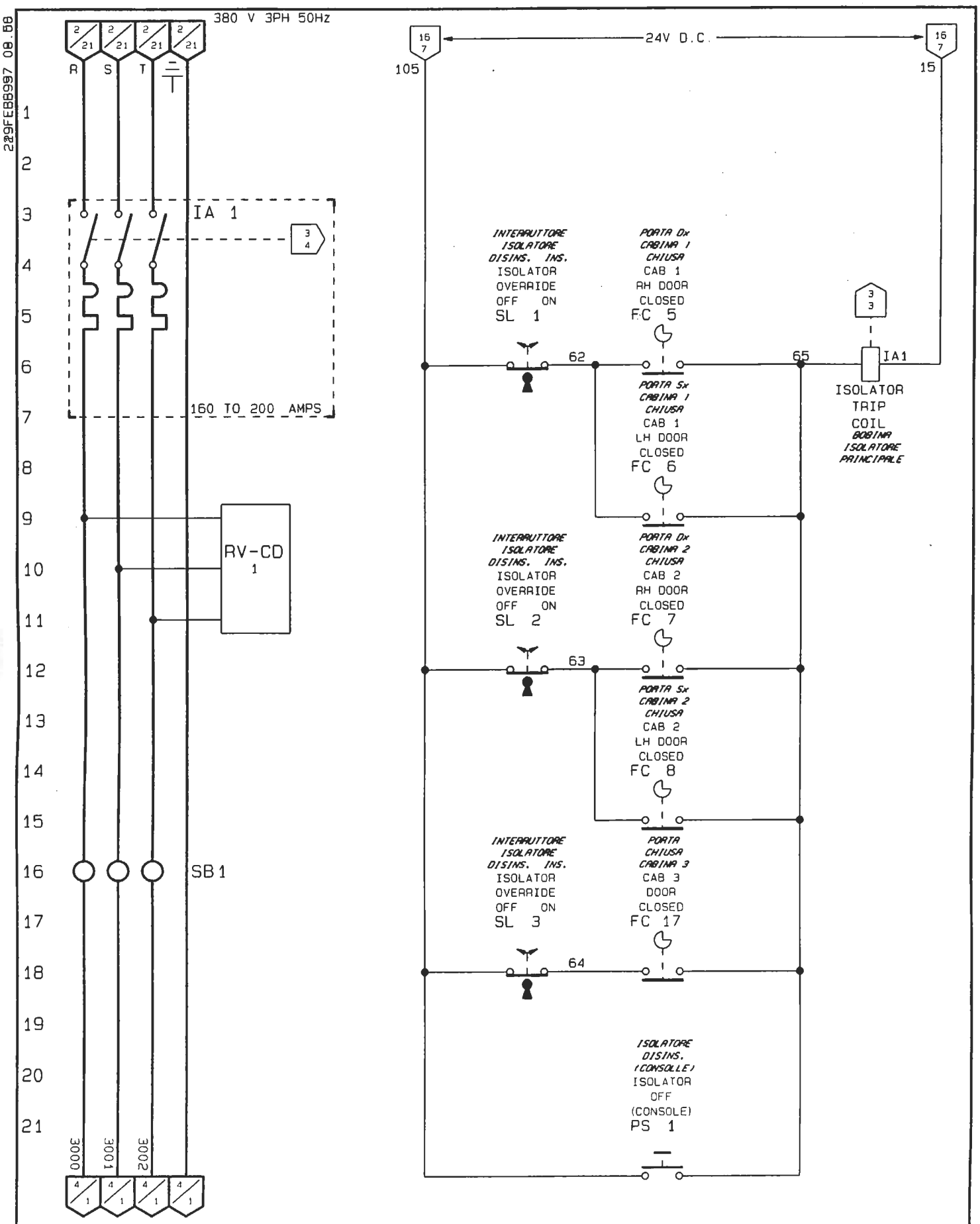
22FEB997 08.58
380 V 3PH 50Hz
R S T
IA 1
160 TO 200 AMPS
RV-CD 1
SB1
3000 3001 3002
24V D.C.
105
15
INTERRUTTORE ISOLATORE DISINS. INS.
ISOLATOR OVERRIDE OFF ON
SL 1
PORTA Dx CABINA 1 CHIUSA
CAB 1 RH DOOR CLOSED
FC 5
62
65
IA1
ISOLATOR TRIP COIL
BOBINA ISOLATORE PRINCIPALE
PORTA Sx CABINA 1 CHIUSA
CAB 1 LH DOOR CLOSED
FC 6
INTERRUTTORE ISOLATORE DISINS. INS.
ISOLATOR OVERRIDE OFF ON
SL 2
PORTA Dx CABINA 2 CHIUSA
CAB 2 RH DOOR CLOSED
FC 7
63
PORTA Sx CABINA 2 CHIUSA
CAB 2 LH DOOR CLOSED
FC 8
INTERRUTTORE ISOLATORE DISINS. INS.
ISOLATOR OVERRIDE OFF ON
SL 3
PORTA CHIUSA CABINA 3
CAB 3 DOOR CLOSED
FC 17
64
ISOLATORE DISINS. (CONSOLLE)
ISOLATOR OFF (CONSOLE)
PS 1

| | | |

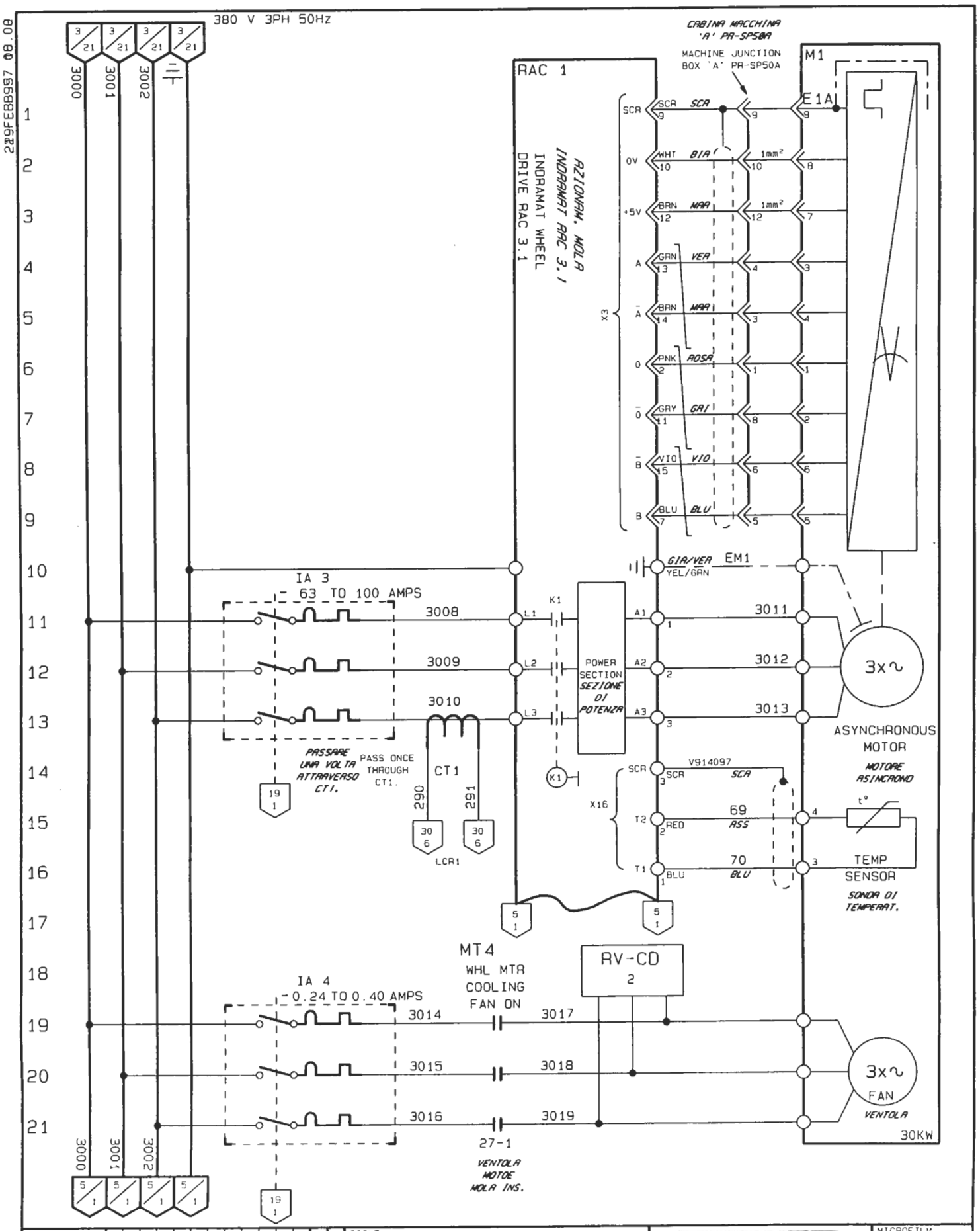

DRAWN RDP	TITLE 3 PHASE POWER WIRING. *ELECTRICO TRIFASE*	FMA	MICROFILM
CHECKED			REF. DRG —
APPROVED		EY01529	SHEET 4
LAYOUT APP'D	M/C No 318-89		SHEETS 150

CHANGES — NAME / DATE / C.I.

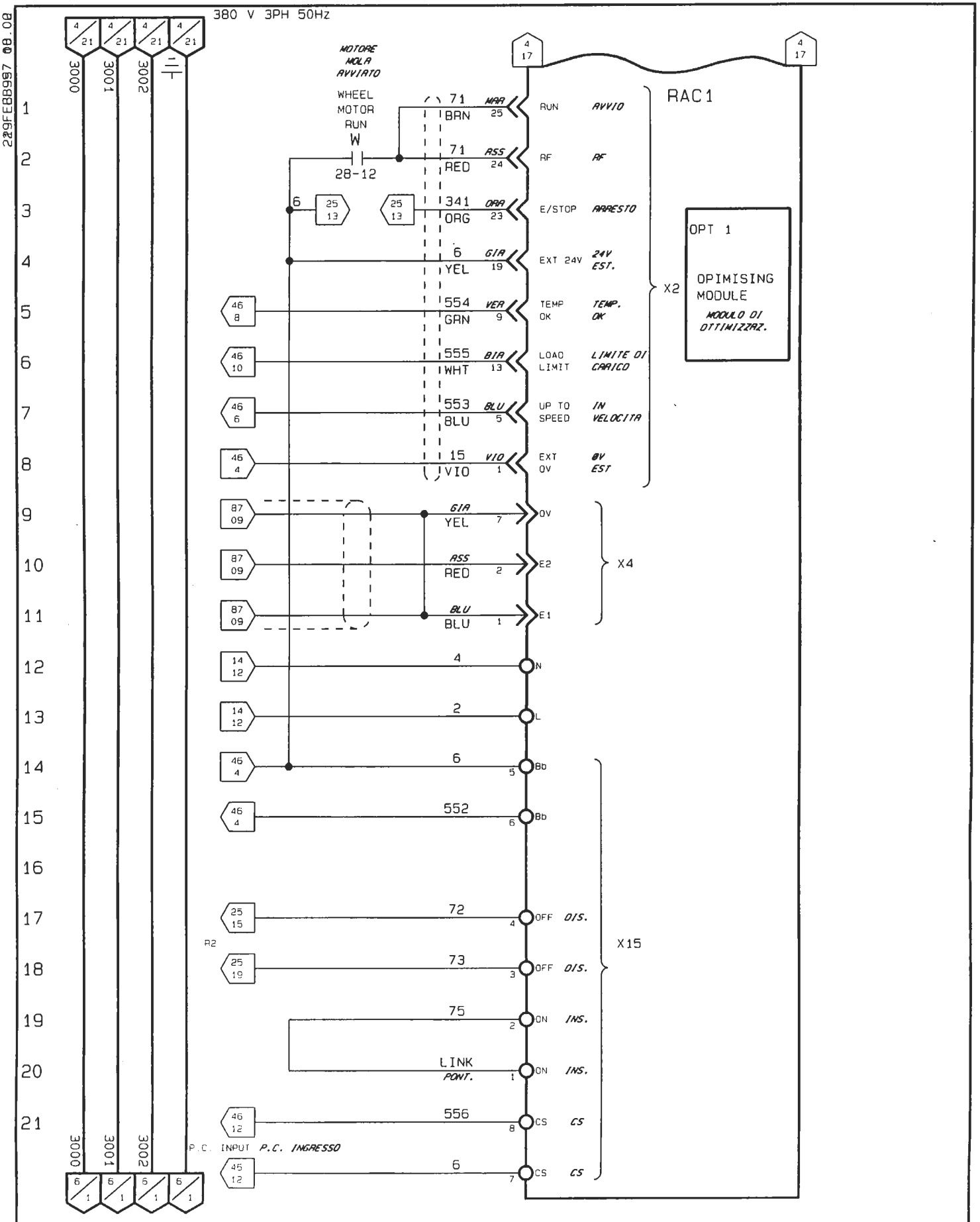
380 V 3PH 50Hz
MOTORE MOLA AVVIATO
WHEEL MOTOR RUN
W
28-12
71 BRN MAR 25 RUN AVVIO
71 RED ASS 24 RF RF
341 ORG ORA 23 E/STOP ARRESTO
6 YEL GIA 19 EXT 24V 24V EST.
554 GRN VER 9 TEMP OK TEMP. OK
555 WHT BIA 13 LOAD LIMIT LIMITE DI CARICO
553 BLU BLU 5 UP TO SPEED IN VELOCITA
15 VIO VIO 1 EXT 0V 0V EST
RAC1
X2
OPT 1
OPIMISING MODULE
MODULO DI OTTIMIZZAZ.
GIA YEL 7 0V
ASS RED 2 E2
BLU BLU 1 E1
X4
4 N
2 L
6 Bb
552 Bb
72 OFF DIS.
73 OFF DIS.
75 ON INS.
LINK PONT. ON INS.
556 CS CS
6 CS CS
X15
P.C. INPUT P.C. INGRESSO
3000
3001
3002

| | | |

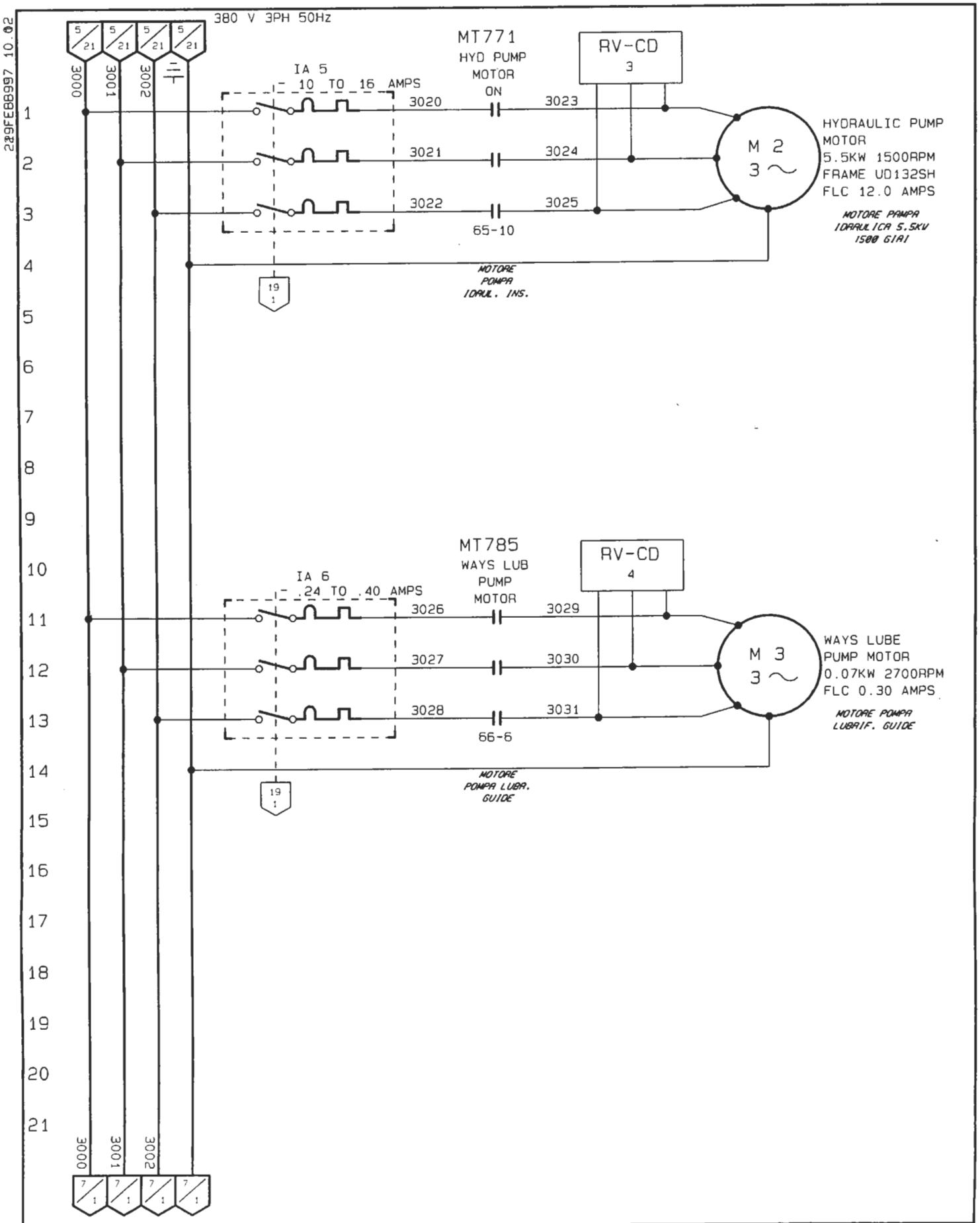
380 V 3PH 50Hz
3000
3001
3002
IA 5
10 TO 16 AMPS
MT771
HYD PUMP
MOTOR
ON
RV-CD
3
3020
3021
3022
3023
3024
3025
65-10
M 2
3 ~
HYDRAULIC PUMP
MOTOR
5.5KW 1500RPM
FRAME UD132SH
FLC 12.0 AMPS
MOTORE PAMPA
IDRAULICA 5.5KW
1500 GIRI
MOTORE
POMPA
IDRAUL. INS.
19
1
IA 6
.24 TO .40 AMPS
MT785
WAYS LUB
PUMP
MOTOR
RV-CD
4
3026
3027
3028
3029
3030
3031
66-6
M 3
3 ~
WAYS LUBE
PUMP MOTOR
0.07KW 2700RPM
FLC 0.30 AMPS
MOTORE POMPA
LUBRIF. GUIDE
MOTORE
POMPA LUBR.
GUIDE
19
1
3000
3001
3002

| | | |

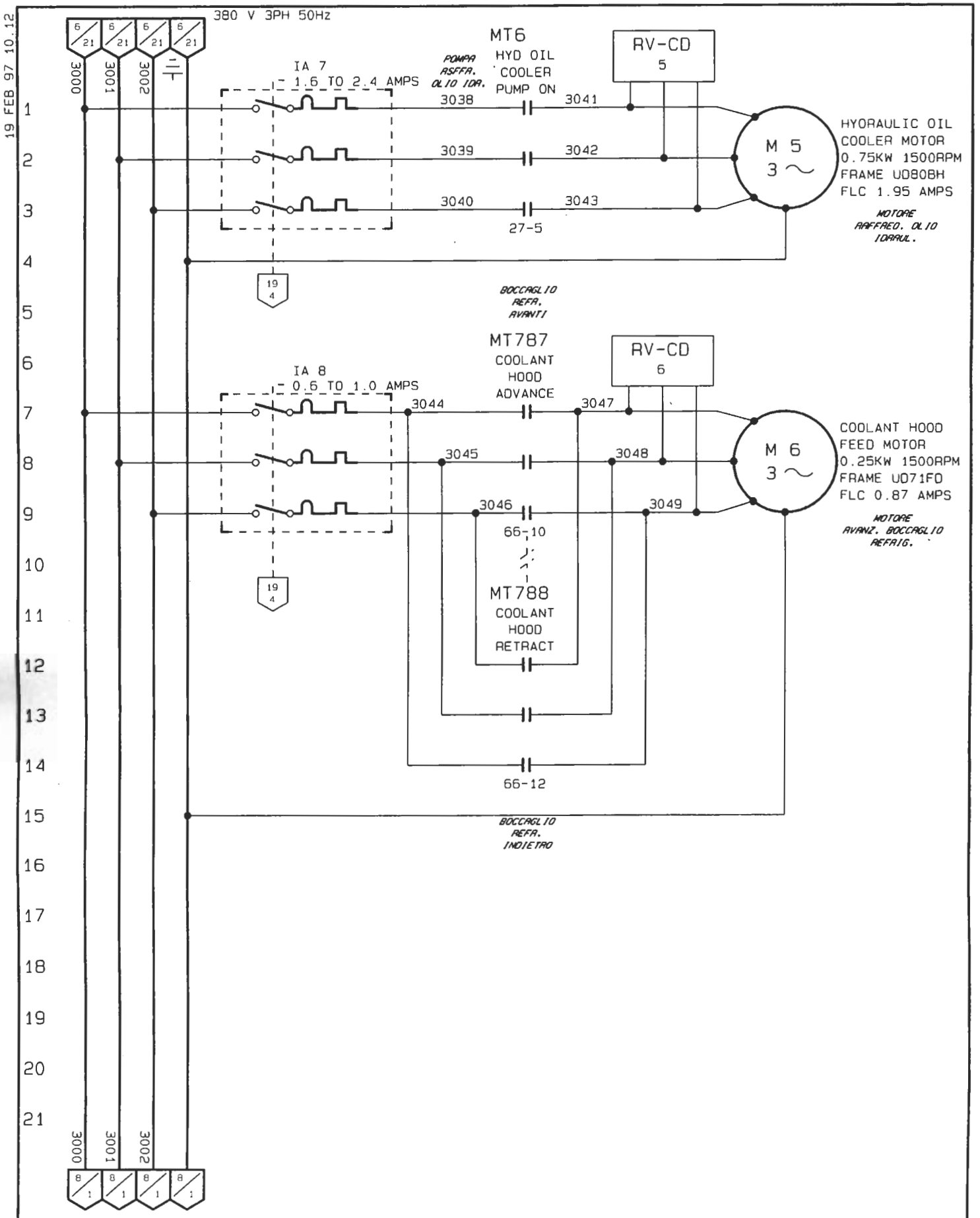

DRAWN RDP	TITLE 3 PHASE POWER WIRING. *ELECTRICO TRIFASE*	FMA	MICROFILM	
CHECKED			REF.DRG –	
APPROVED		EY01529	SHEET 7	
LAYOUT APP'D	M/C No 318-89		SHEETS 150	

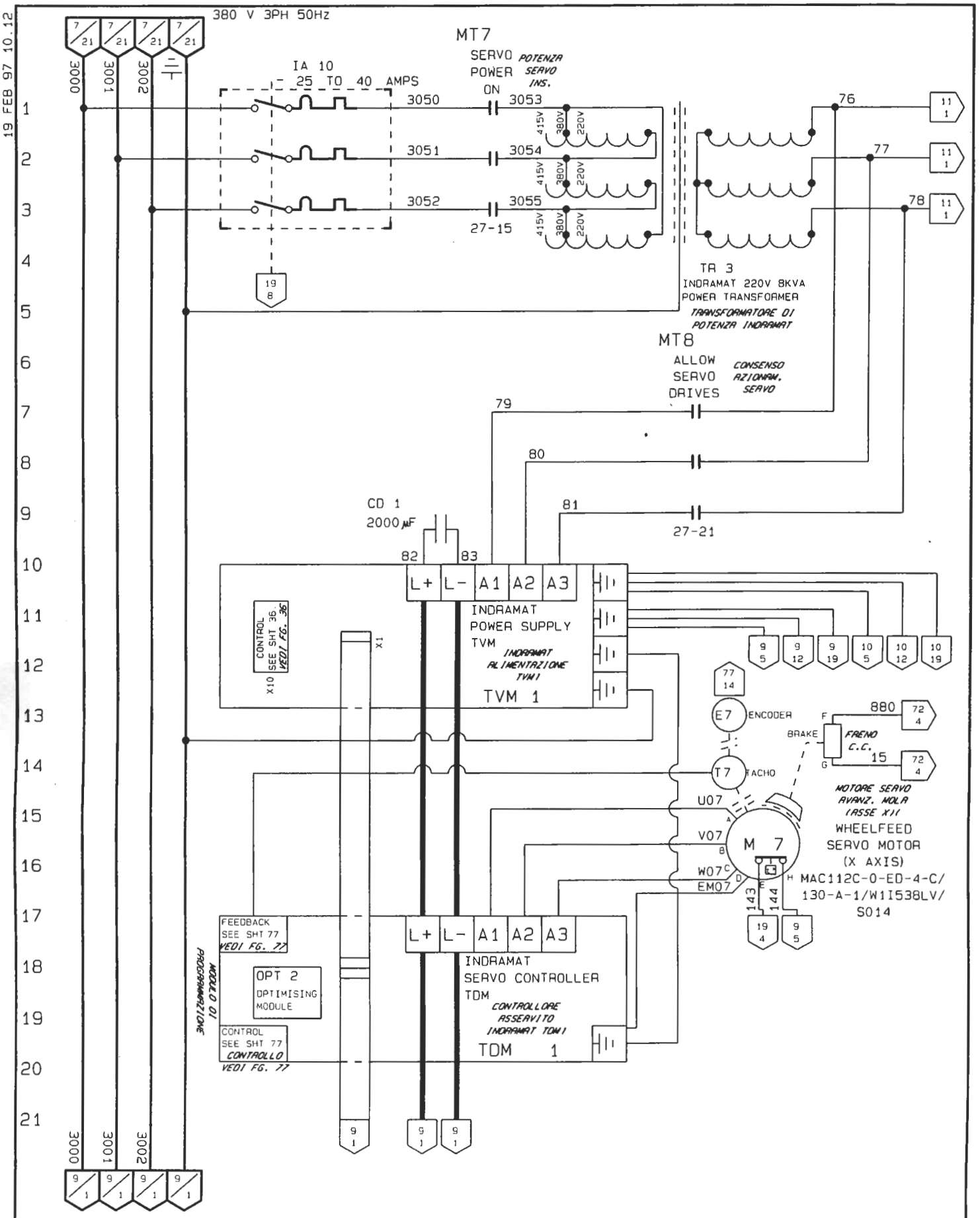

DRAWN ADP																		
CHECKED																		
APPROVED																		
LAYOUT APP'D																		

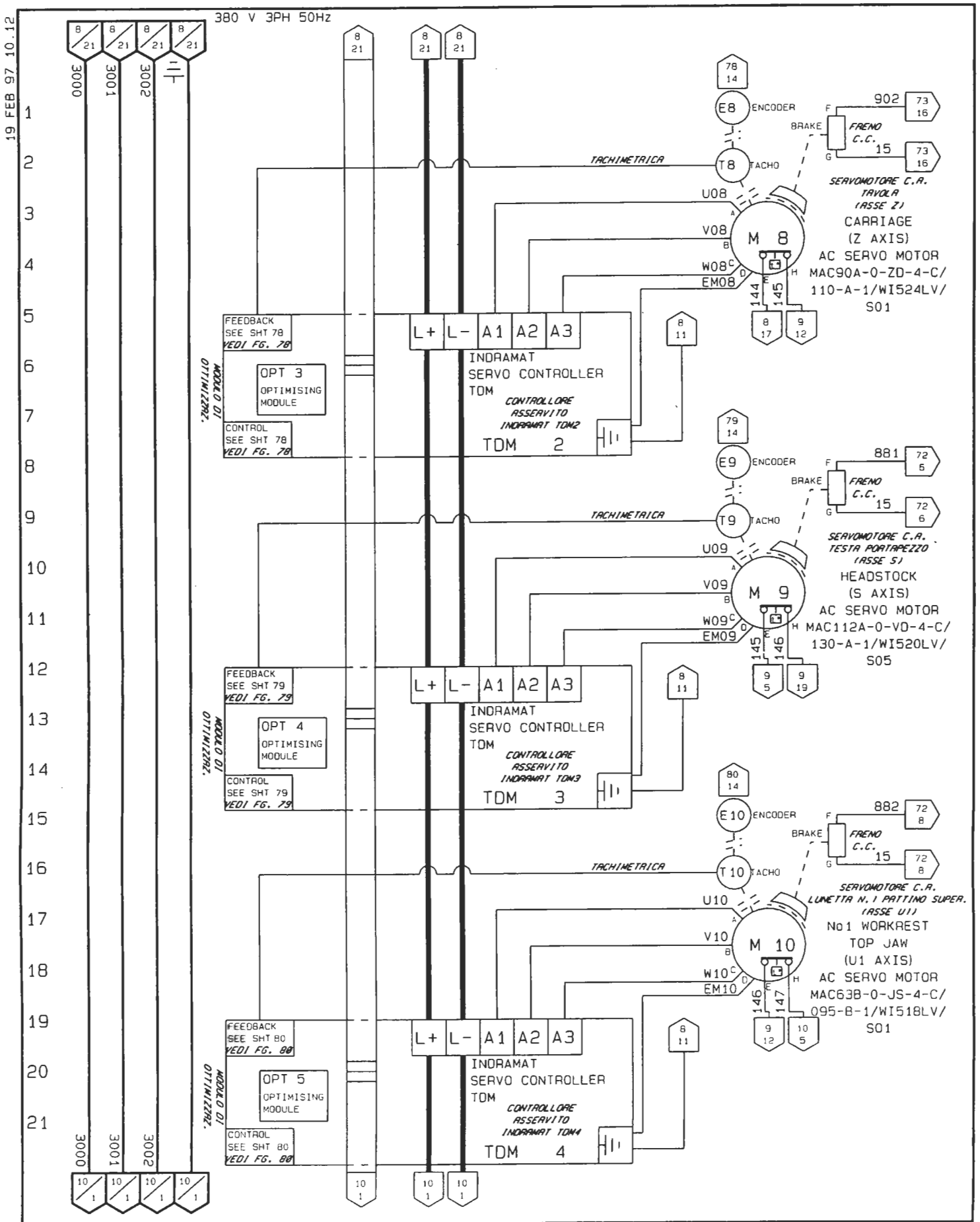

DRAWN RDP				TITLE 3 PHASE POWER WIRING. *ELECTAICO TAIFASE*	MICROFILM
CHECKED					REF. DRG —
APPROVED				FMA	SHEET 9
LAYOUT APP'D				EY01529	SHEETS 150
				M/C No 318-89	

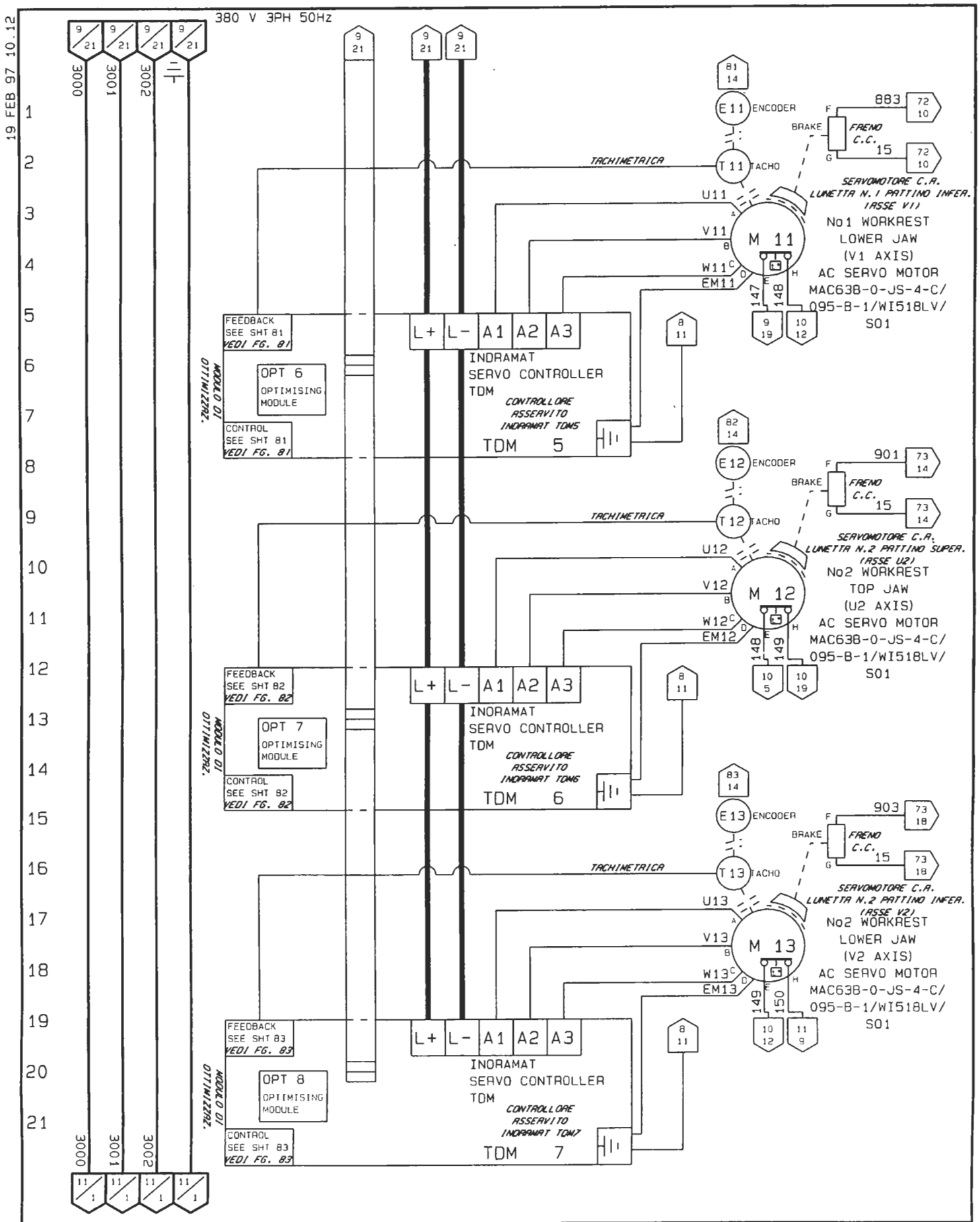

DRAWN ROP		TITLE 3 PHASE POWER WIRING. *ELECTRICO TRIFASE*	FMA	MICROFILM	
CHECKED				REF. DRG –	
APPROVED			EY01529	SHEET 10	
LAYOUT APP'D		M/C No 318-89		SHEETS 150	

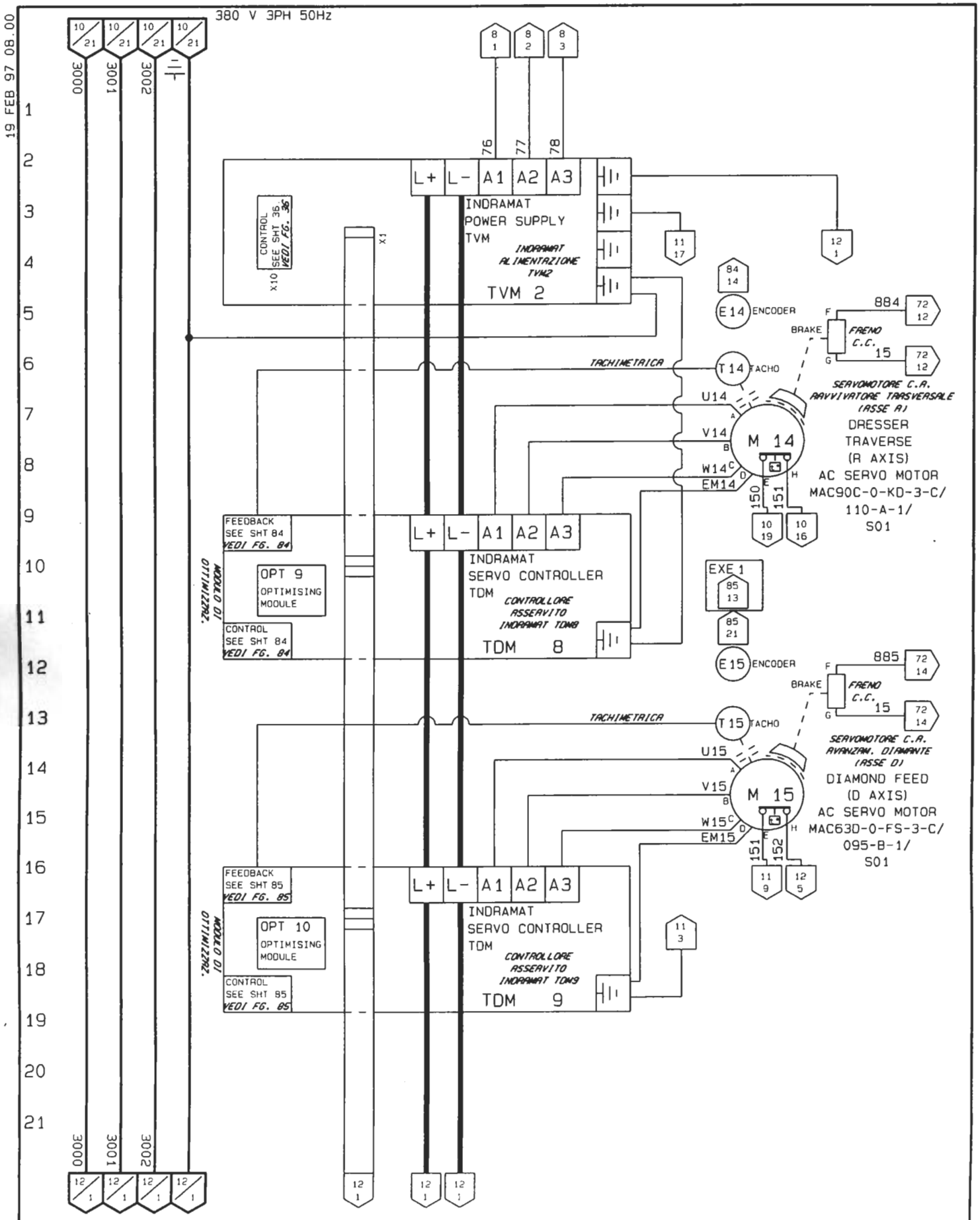

DRAWN RDP															
CHECKED															
APPROVED															
LAYOUT APP'D															
CHANGES															
NAME	MC	MC	MC	MC	MC	MC	MC	MC	MC	MC	MC	MC	MC	MC	MC
DATE	17-02-97	17-02-97	17-02-97	17-02-97	17-02-97	17-02-97	17-02-97	17-02-97	17-02-97	17-02-97	17-02-97	17-02-97	17-02-97	17-02-97	17-02-97
C.I.	M/O 9556	M/O 9763	M/O 9768	M/O 9768	M/O 9769	M/O 9607	M/O 9650	M/O 9702							

TITLE

3 PHASE POWER WIRING.

ELECTRICO TRIFASE

M/C No 318-89

FMA

EY01529

MICROFILM

REF DRG —

SHEET 11

SHEETS 150

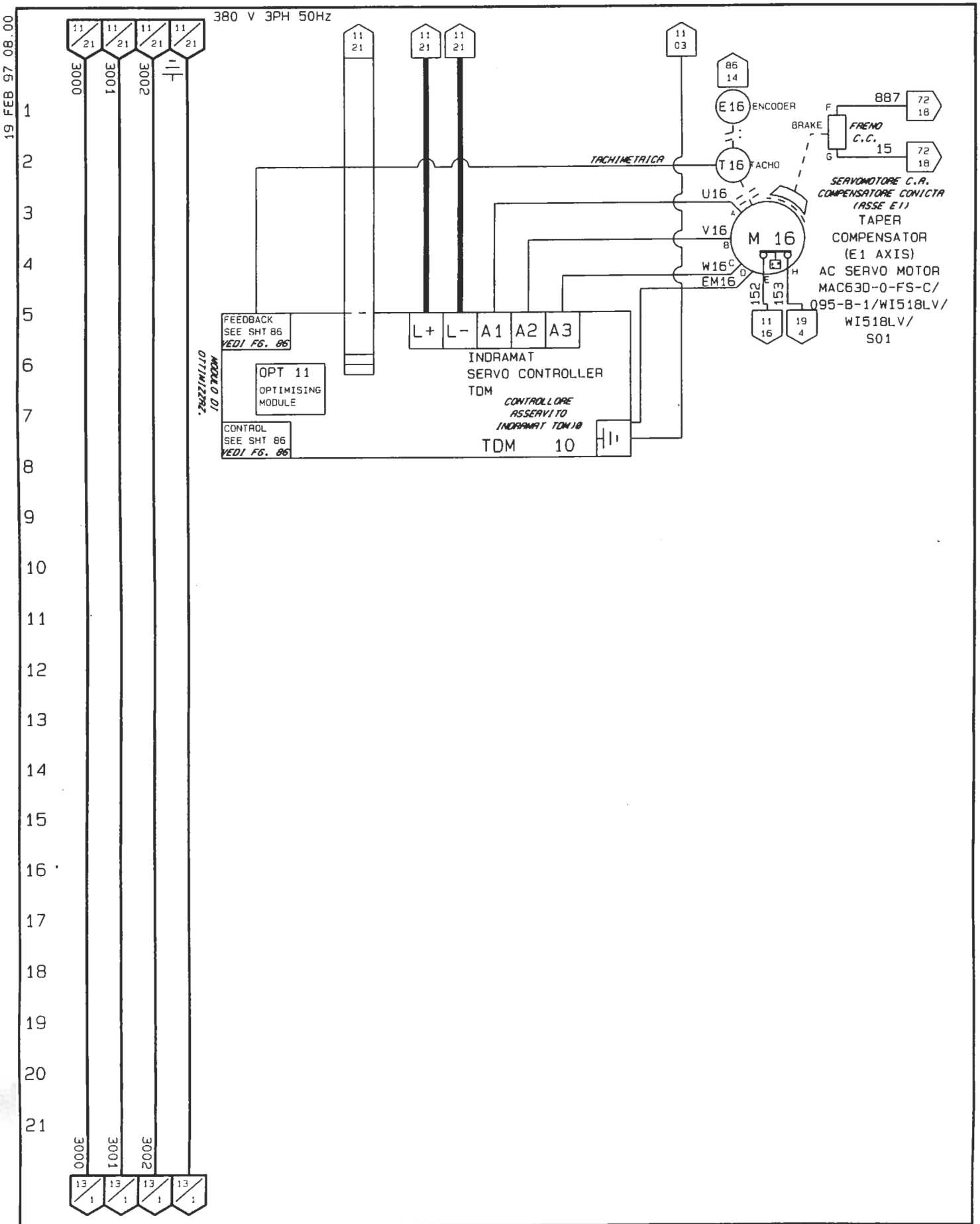

DRAWN RDP	NAME	TITLE 3 PHASE POWER WIRING. *ELECTRICO TRIFASE*	FMA	MICROFILM
CHECKED	DATE			REF.DRG –
APPROVED	C.I.	M/C No 318-89	EY01529	SHEET 12
LAYOUT APP'D	CHANGES			SHEETS 150

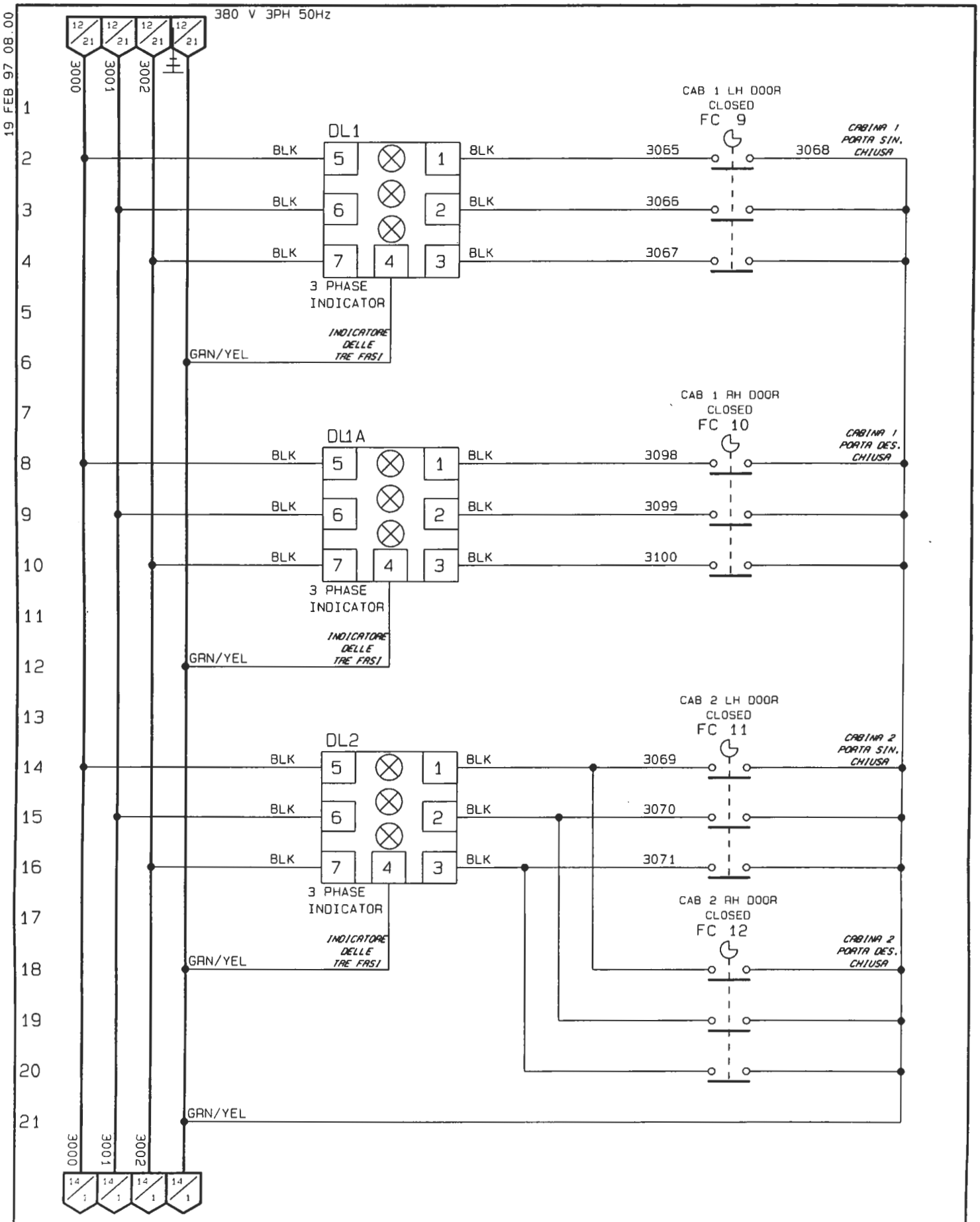
19 FEB 97 08.00
380 V 3PH 50Hz
3000
3001
3002
DL1
DL1A
DL2
BLK
GRN/YEL
3 PHASE INDICATOR
INDICATORE DELLE TRE FASI
CAB 1 LH DOOR CLOSED
FC 9
CAB 1 RH DOOR CLOSED
FC 10
CAB 2 LH DOOR CLOSED
FC 11
CAB 2 RH DOOR CLOSED
FC 12
CABINA 1 PORTA SIN. CHIUSA
CABINA 1 PORTA DES. CHIUSA
CABINA 2 PORTA SIN. CHIUSA
CABINA 2 PORTA DES. CHIUSA
3065
3066
3067
3068
3098
3099
3100
3069
3070
3071

| | | |

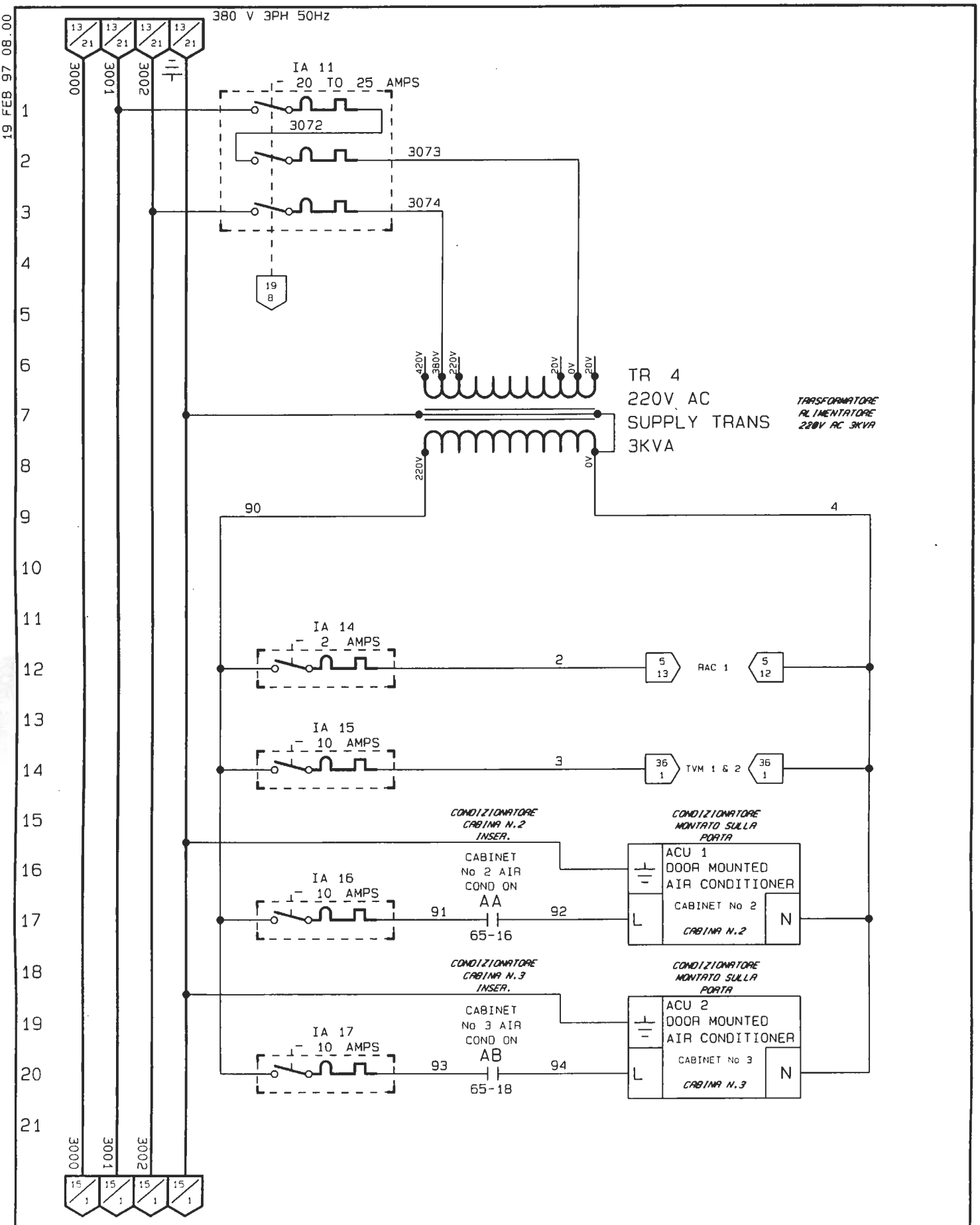

DRAWN RDP					KE	KE	KE	KE	KE	KE	KE	KE	KE	NAME	CHANGES	TITLE	MICROFILM
CHECKED					17-02-97	17-02-97	17-02-97	17-02-97	17-02-97	17-02-97	17-02-97	17-02-97	17-02-97	DATE		3 PHASE POWER WIRING. *ELECTRICO TRIFASE*	REF.DRG –
APPROVED					K/O 96898	K/O 97833	K/O 97287	K/O 97652	K/O 97645	K/O 96607	K/O 96590	K/O 97032	C.I.			FMA	SHEET 14
LAYOUT APP'D																EY01529	SHEETS 150
																M/C No 318-89	

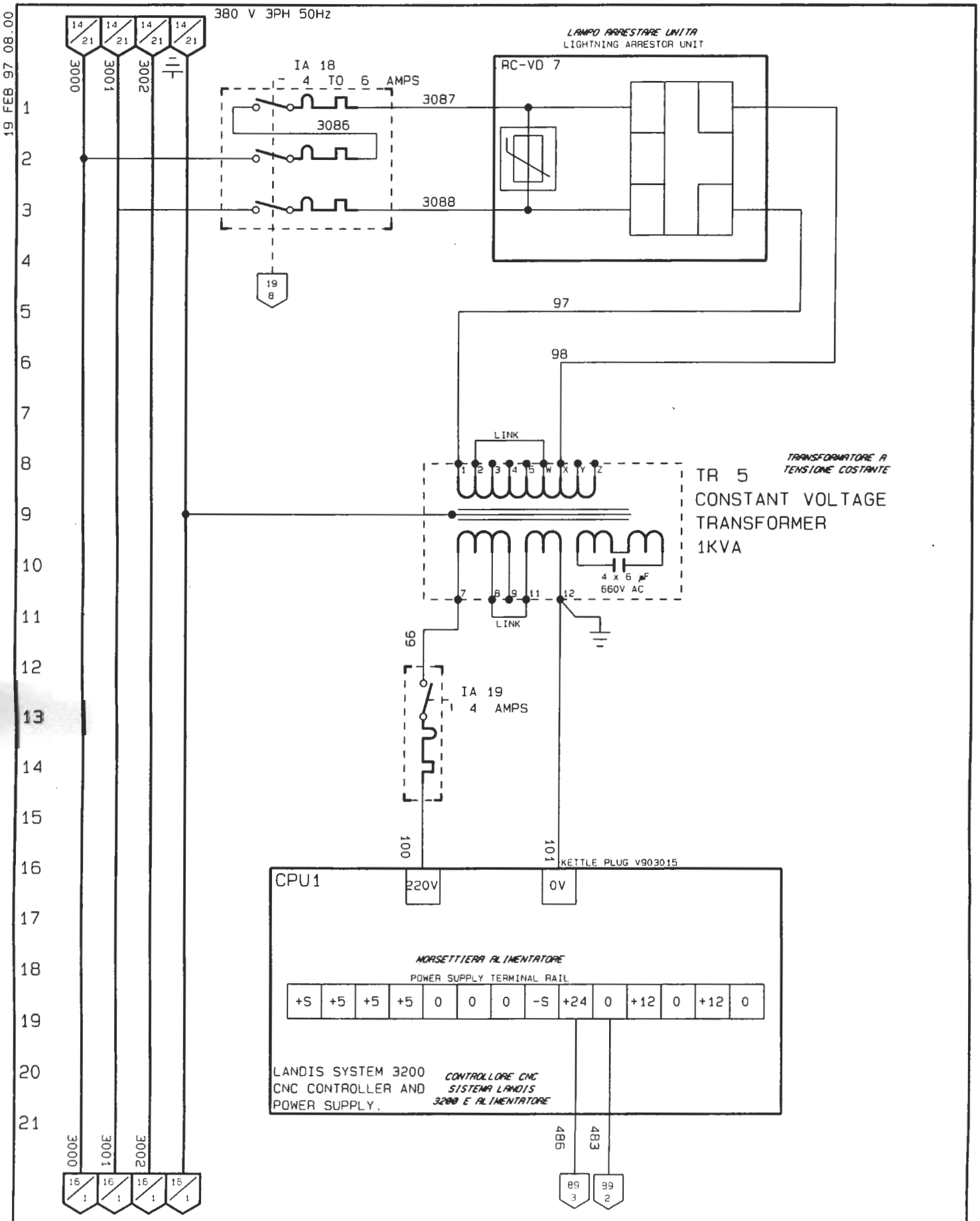

DRAWN RDP		TITLE 3 PHASE POWER WIRING. ELECTRICO TRIFASE	FMA	MICROFILM
CHECKED				REF.DRG –
APPROVED			EY01529	SHEET 15
LANDIS APP'D		M/C No 318-89		SHEETS 150

CHANGES

NAME	DATE	C.I.
KE	17-02-97	M/O 95956
KE	17-02-97	M/O 95957
KE	17-02-97	M/O 97287
KE	17-02-97	M/O 97562
KE	17-02-97	M/O 97563
KE	17-02-97	M/O 95987
KE	17-02-97	M/O 95988
KE	17-02-97	M/O 95989
KE	17-02-97	M/O 97012

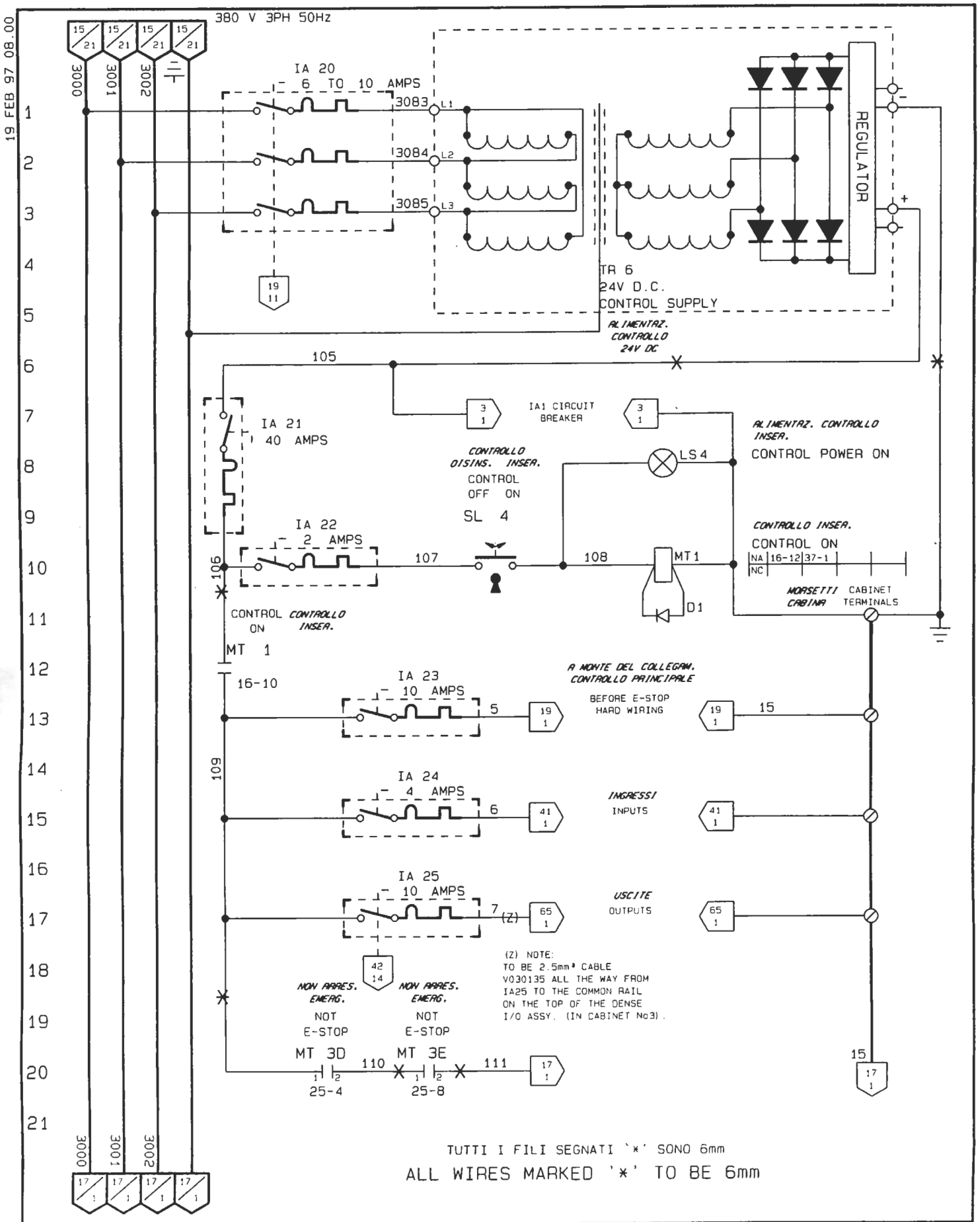

DRAWN ROP																		
CHECKED																		
APPROVED																		
LAYOUT APP'D																		

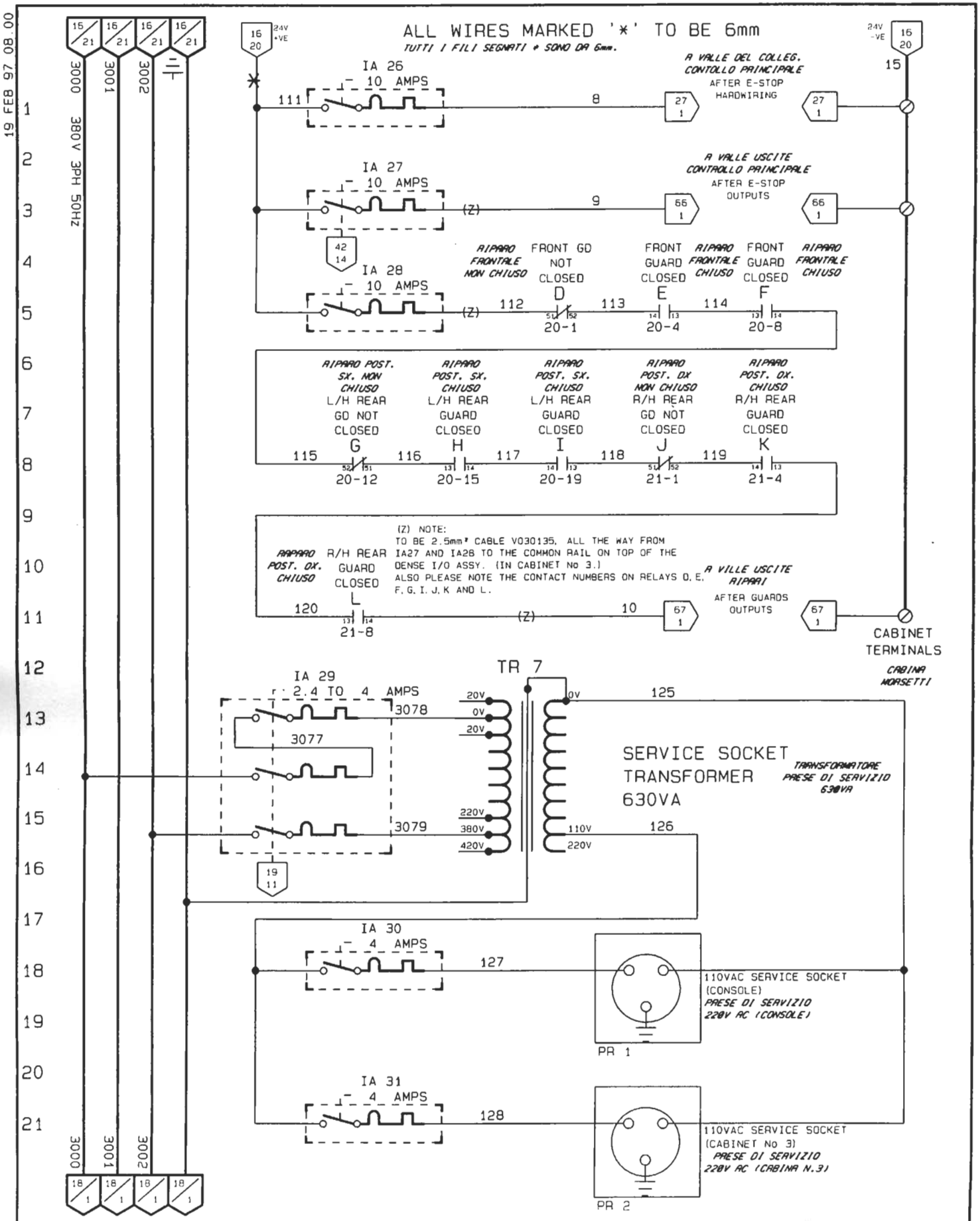
19 FEB 97 08.00
ALL WIRES MARKED '*' TO BE 6mm
TUTTI I FILI SEGNATI * SONO DA 6mm.
380V 3PH 50HZ
3000
3001
3002
24V +VE
24V -VE
IA 26
10 AMPS
111
8
A VALLE DEL COLLEG. CONTOLLO PRINCIPALE
AFTER E-STOP HARDWIRING
IA 27
10 AMPS
9
A VALLE USCITE CONTROLLO PRINCIPALE
AFTER E-STOP OUTPUTS
IA 28
10 AMPS
112
113
114
RIPARO FRONTALE NON CHIUSO
FRONT GD NOT CLOSED
D
20-1
FRONT GUARD CLOSED
E
20-4
RIPARO FRONTALE CHIUSO
FRONT GUARD CLOSED
F
20-8
RIPARO FRONTALE CHIUSO
RIPARO POST. SX. NON CHIUSO
L/H REAR GD NOT CLOSED
G
20-12
115
116
RIPARO POST. SX. CHIUSO
L/H REAR GUARD CLOSED
H
20-15
117
RIPARO POST. SX. CHIUSO
L/H REAR GUARD CLOSED
I
20-19
118
RIPARO POST. DX NON CHIUSO
R/H REAR GD NOT CLOSED
J
21-1
119
RIPARO POST. DX. CHIUSO
R/H REAR GUARD CLOSED
K
21-4
RIPARO POST. DX. CHIUSO
R/H REAR GUARD CLOSED
L
21-8
120
10
(Z) NOTE:
TO BE 2.5mm² CABLE V030135, ALL THE WAY FROM IA27 AND IA28 TO THE COMMON RAIL ON TOP OF THE DENSE I/O ASSY. (IN CABINET No 3.)
ALSO PLEASE NOTE THE CONTACT NUMBERS ON RELAYS D, E, F, G, I, J, K AND L.
A VILLE USCITE RIPARI
AFTER GUARDS OUTPUTS
CABINET TERMINALS
CABINA MORSETTI
IA 29
2.4 TO 4 AMPS
3078
3077
3079
TR 7
20V
0V
20V
220V
380V
420V
0V
110V
220V
125
126
SERVICE SOCKET TRANSFORMER 630VA
TRASFORMATORE PRESE DI SERVIZIO 630VA
IA 30
4 AMPS
127
110VAC SERVICE SOCKET (CONSOLE)
PRESE DI SERVIZIO 220V AC (CONSOLE)
PR 1
IA 31
4 AMPS
128
110VAC SERVICE SOCKET (CABINET No 3)
PRESE DI SERVIZIO 220V AC (CABINA N.3)
PR 2

| | | |

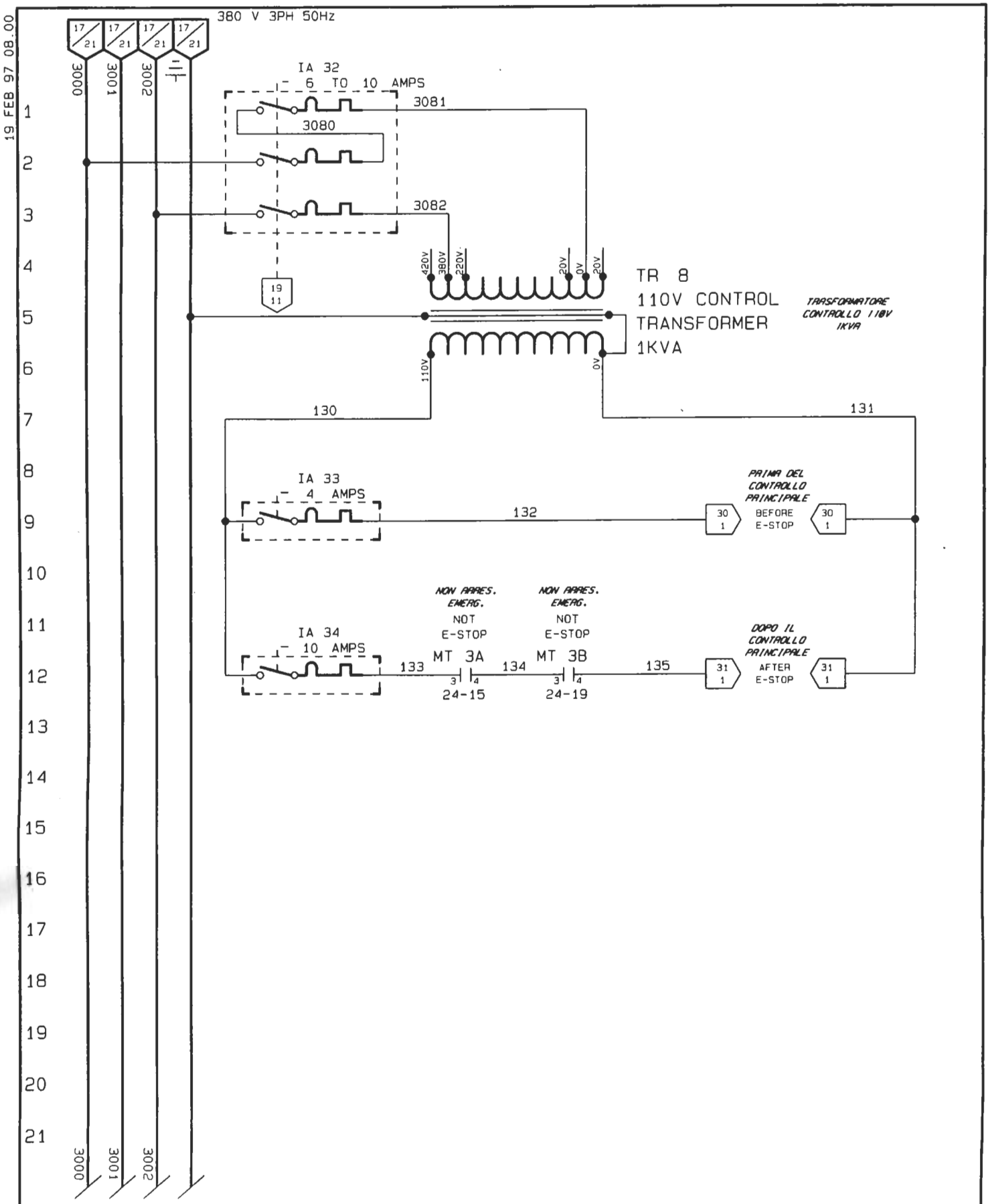
19 FEB 97 08.00
380 V 3PH 50Hz
3000
3001
3002
IA 32
- 6 TO 10 AMPS
3081
3080
3082
19
11
420V
380V
220V
20V
0V
20V
TR 8
110V CONTROL
TRANSFORMER
1KVA
TRASFORMATORE
CONTROLLO 110V
1KVA
110V
0V
130
131
IA 33
- 4 AMPS
132
PRIMA DEL
CONTROLLO
PRINCIPALE
30
1
BEFORE
E-STOP
30
1
NON PARES.
EMERG.
NOT
E-STOP
NON PARES.
EMERG.
NOT
E-STOP
IA 34
- 10 AMPS
133
MT 3A
24-15
134
MT 3B
24-19
135
DOPO IL
CONTROLLO
PRINCIPALE
31
1
AFTER
E-STOP
31
1

| | | |

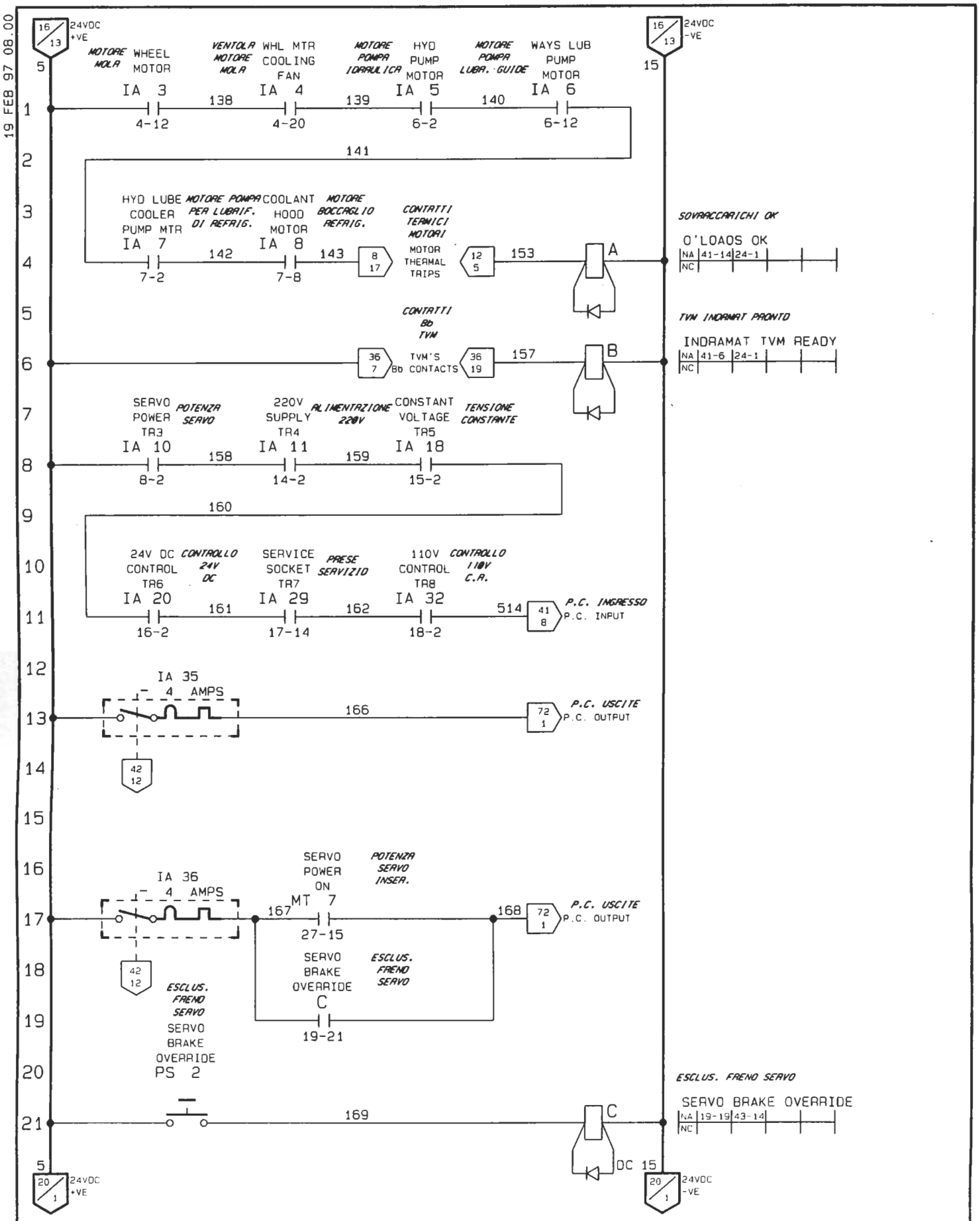

DRAWN ADP					MICROFILM
CHECKED					REF. DRG –
APPROVED					SHEET 19
LAYOUT APP'D					SHEET 150

TITLE

RELAY SCHEMATIC.

SCHEMI ELECTRICI RELE'

M/C No 318-89

FMA

EY01529

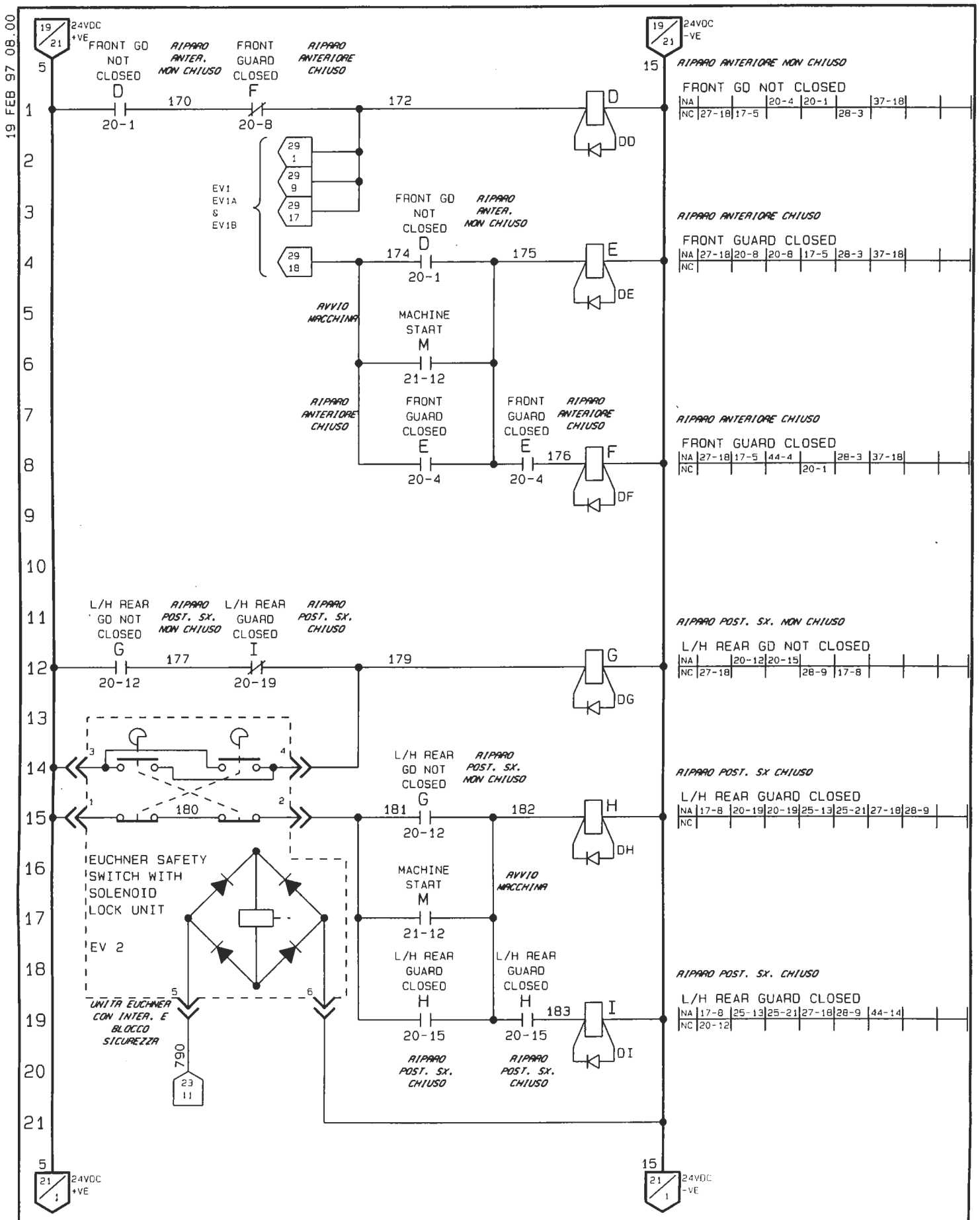

DRAWN RDP	NAME	TITLE	MICROFILM
CHECKED	DATE	RELAY SCHEMATIC.	REF.DRG –
APPROVED	C.I.	SCHEMI ELECTRICI RELE'	SHEET 20
LAYOUT APP'D	CHANGES	M/C No 318-89	SHEETS 150

FMA

EY01529

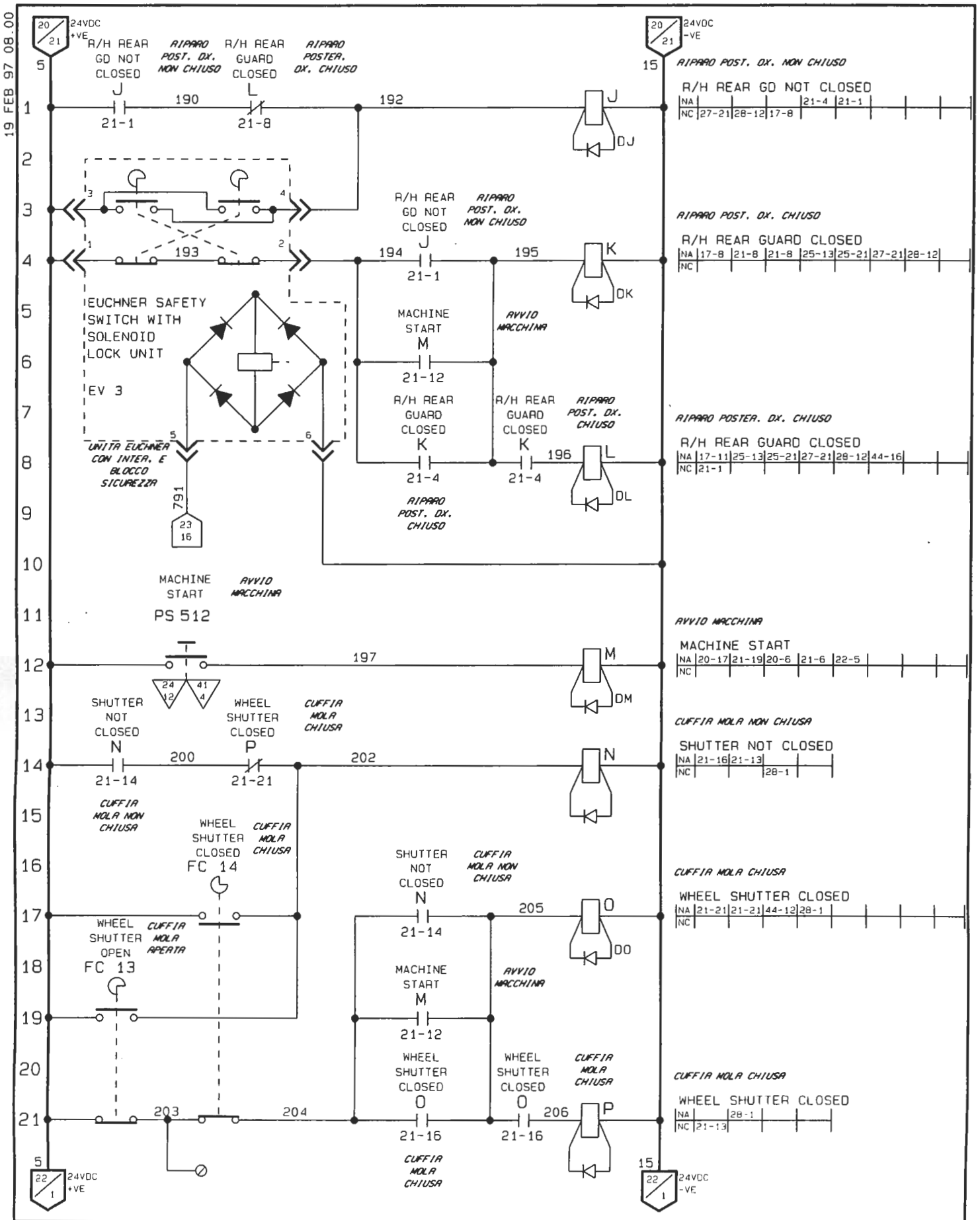
19 FEB 97 08.00
24VDC +VE
24VDC -VE
R/H REAR GD NOT CLOSED
RIPARO POST. DX. NON CHIUSO
R/H REAR GUARD CLOSED
RIPARO POSTER. DX. CHIUSO
J
L
190
192
21-1
21-8
DJ
EUCHNER SAFETY SWITCH WITH SOLENOID LOCK UNIT
EV 3
193
194
195
MACHINE START
M
21-12
AVVIO MACCHINA
K
DK
R/H REAR GUARD CLOSED
21-4
196
L
DL
UNITA EUCHNER CON INTER. E BLOCCO SICUREZZA
791
23 16
MACHINE START
PS 512
197
M
DM
SHUTTER NOT CLOSED
N
WHEEL SHUTTER CLOSED
P
CUFFIA MOLA CHIUSA
200
202
21-14
21-21
CUFFIA MOLA NON CHIUSA
FC 14
WHEEL SHUTTER OPEN
FC 13
CUFFIA MOLA APERTA
205
O
DO
206
P
203
204
21-16
RIPARO POST. DX. NON CHIUSO
RIPARO POST. DX. CHIUSO
RIPARO POSTER. DX. CHIUSO
AVVIO MACCHINA
CUFFIA MOLA NON CHIUSA
CUFFIA MOLA CHIUSA
NA
NC
27-21
28-12
17-8
21-4
21-1
25-13
25-21
27-21
17-11
44-16
20-17
21-19
20-6
22-5
28-1
21-13
44-12
DRAWN
RDP
CHECKED
APPROVED
LAYOUT APP'D
NAME
DATE
C.I.
CHANGES
TITLE
RELAY SCHEMATIC.
SCHEMI ELECTRICI RELE'
M/C No 318-89
FMA
EY01529
MICROFILM
REF.DRG
SHEET
21
SHEETS
150

19 FEB 97 08.00

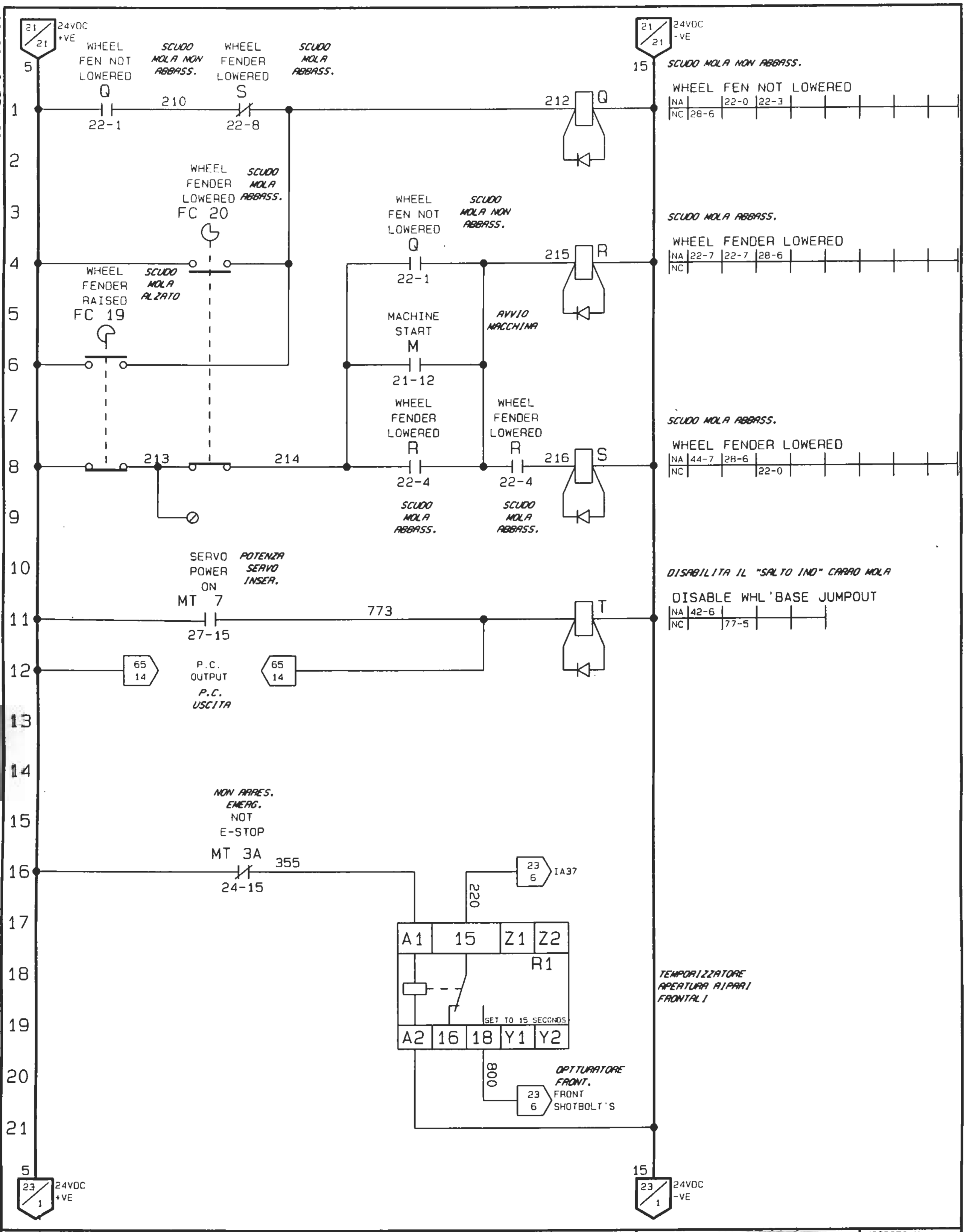

DRAWN RDP									
NAME	KE	KE	KE	KE	KE	KE	KE		
DATE	17-02-97	17-02-97	17-02-97	17-02-97	17-02-97	17-02-97	17-02-97		
C.I.	W/O 97032	W/O 96950	W/O 96607	W/O 97645	W/O 97662	W/O 97287	W/O 97833	W/O 95858	

CHECKED

APPROVED

LAYOUT APP'D

CHANGES

TITLE

RELAY SCHEMATIC.

SCHEMI ELECTRICI RELE'

M/C No 318-89

FMA

EY01529

MICROFILM

REF.DRG –

SHEET 22

SHEETS 150

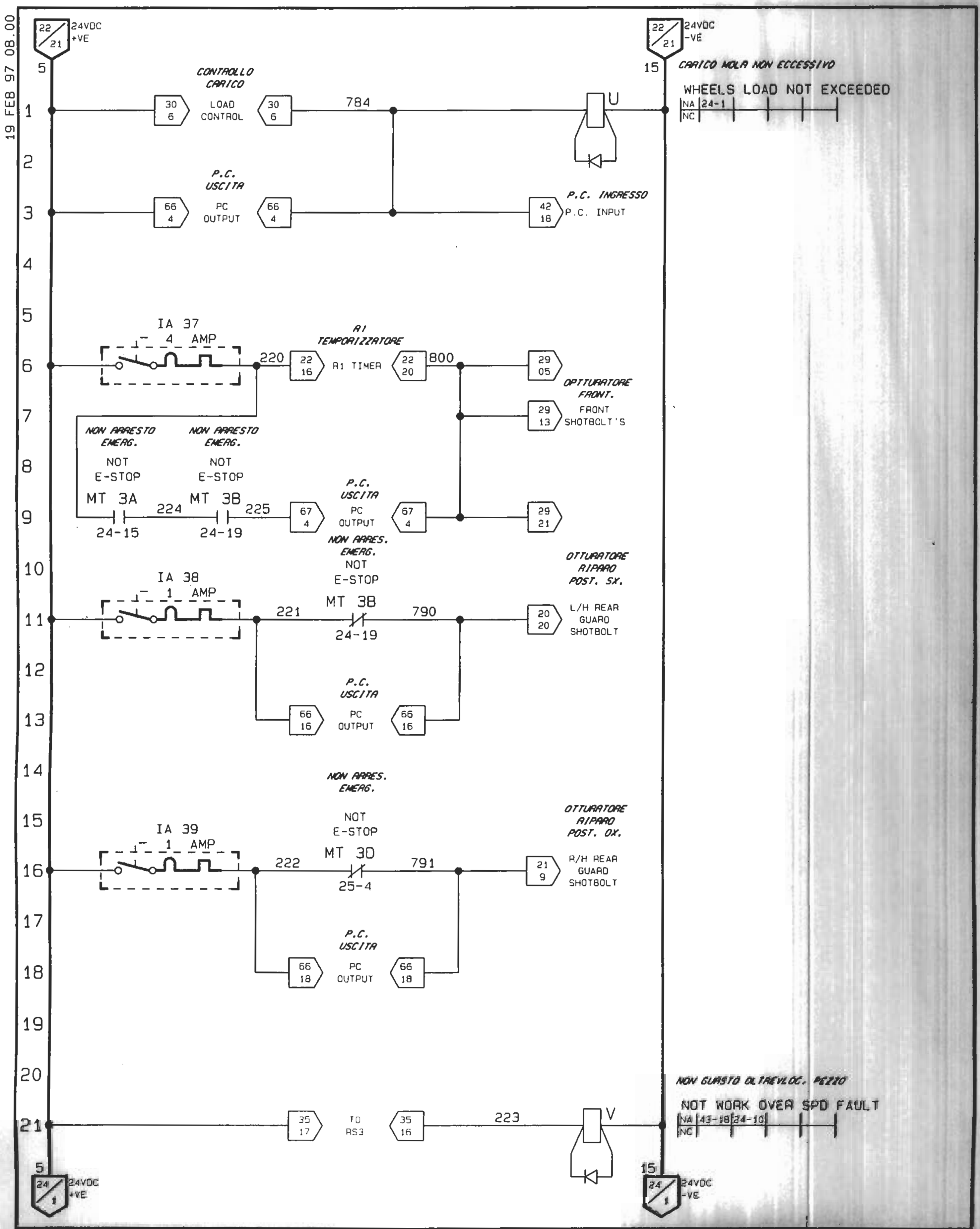

DRAWN	RDP
CHECKED	
APPROVED	
LAYOUT APP'D	

NAME	DATE	C.I.
KE	17-02-97	W/O 95658
KE	17-02-97	W/O 97835
KE	17-02-97	W/O 97287
KE	17-02-97	W/O 97662
KE	17-02-97	W/O 97846
KE	17-02-97	W/O 96607
KE	17-02-97	W/O 96660
KE	17-02-97	W/O 97032

CHANGES

TITLE

RELAY SCHEMATIC.

SCHEMI ELECTRICI RELE'

M/C No 318-89

FMA

EY01529

MICROFILM

REF.DRG —

SHEET 23

SHEETS 150

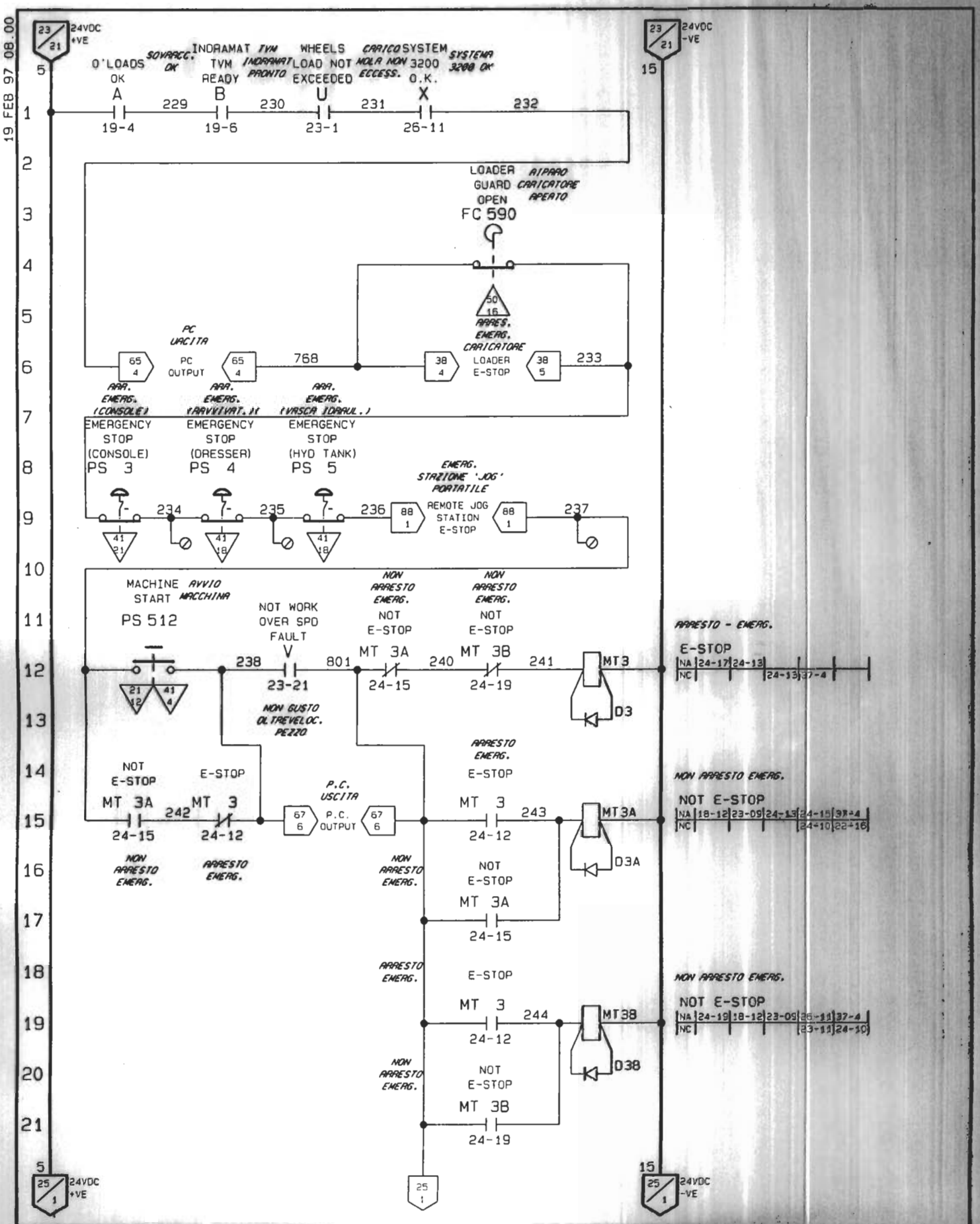

DRAWN ROP					KE	KE	KE	KE	KE	KE	KE	KE	KE	NAME	CHANGES	TITLE RELAY SCHEMATIC. SCHEMI ELECTRICI RELE'	MICROFILM
CHECKED					17-02-97	17-02-97	17-02-97	17-02-97	17-02-97	17-02-97	17-02-97	17-02-97	17-02-97	DATE			REF. DRG –
APPROVED					W/O 95858	W/O 97833	W/O 97828	W/O 95825	W/O 95845	W/O 98807	W/O 95856	W/O 97832		C.I.		M/C No 318-89	SHEET 24
LAYOUT APP'D																	SHEETS 150

FMA

EY01529

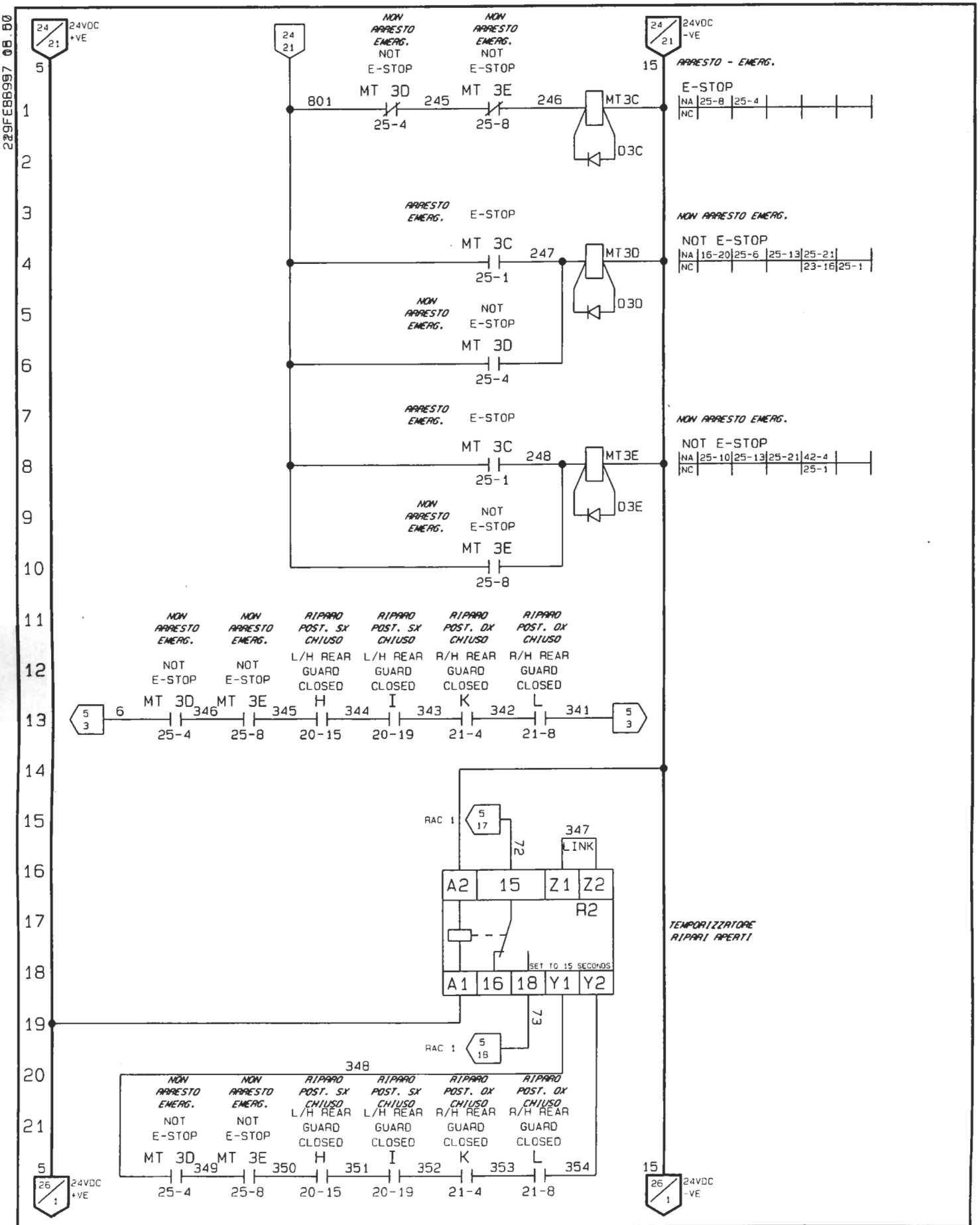
229FE88997 08.00
24VDC +VE
24VDC -VE
NON ARRESTO EMERG. NOT E-STOP
ARRESTO EMERG. E-STOP
MT 3D
MT 3E
MT 3C
801
245
246
247
248
25-4
25-8
25-1
MT3C
MT3D
MT3E
D3C
D3D
D3E
ARRESTO - EMERG.
E-STOP
NA 25-8 25-4
NC
NON ARRESTO EMERG.
NOT E-STOP
NA 16-20 25-6 25-13 25-21
NC 23-16 25-1
NA 25-10 25-13 25-21 42-4
NC 25-1
RIPARO POST. SX CHIUSO L/H REAR GUARD CLOSED
RIPARO POST. DX CHIUSO R/H REAR GUARD CLOSED
H
I
K
L
6
346
345
344
343
342
341
20-15
20-19
21-4
21-8
RAC 1
72
73
347
LINK
A2
15
Z1
Z2
R2
SET TO 15 SECONDS
A1
16
18
Y1
Y2
TEMPORIZZATORE RIPARI APERTI
348
349
350
351
352
353
354

| | | |

049ABGB997 08.60

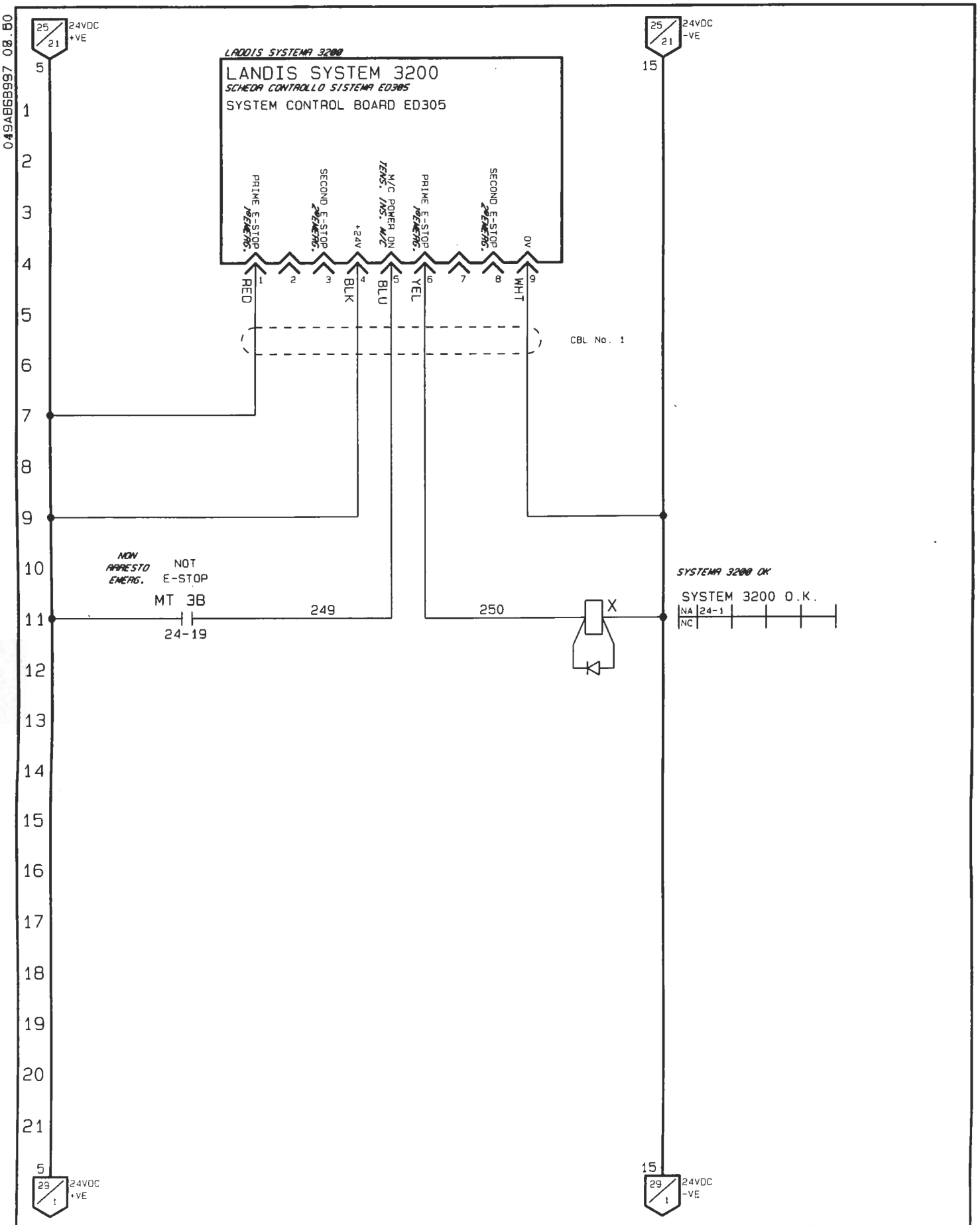

DRAWN RDP																	
CHECKED																	
APPROVED																	
LAYOUT APP'D																	

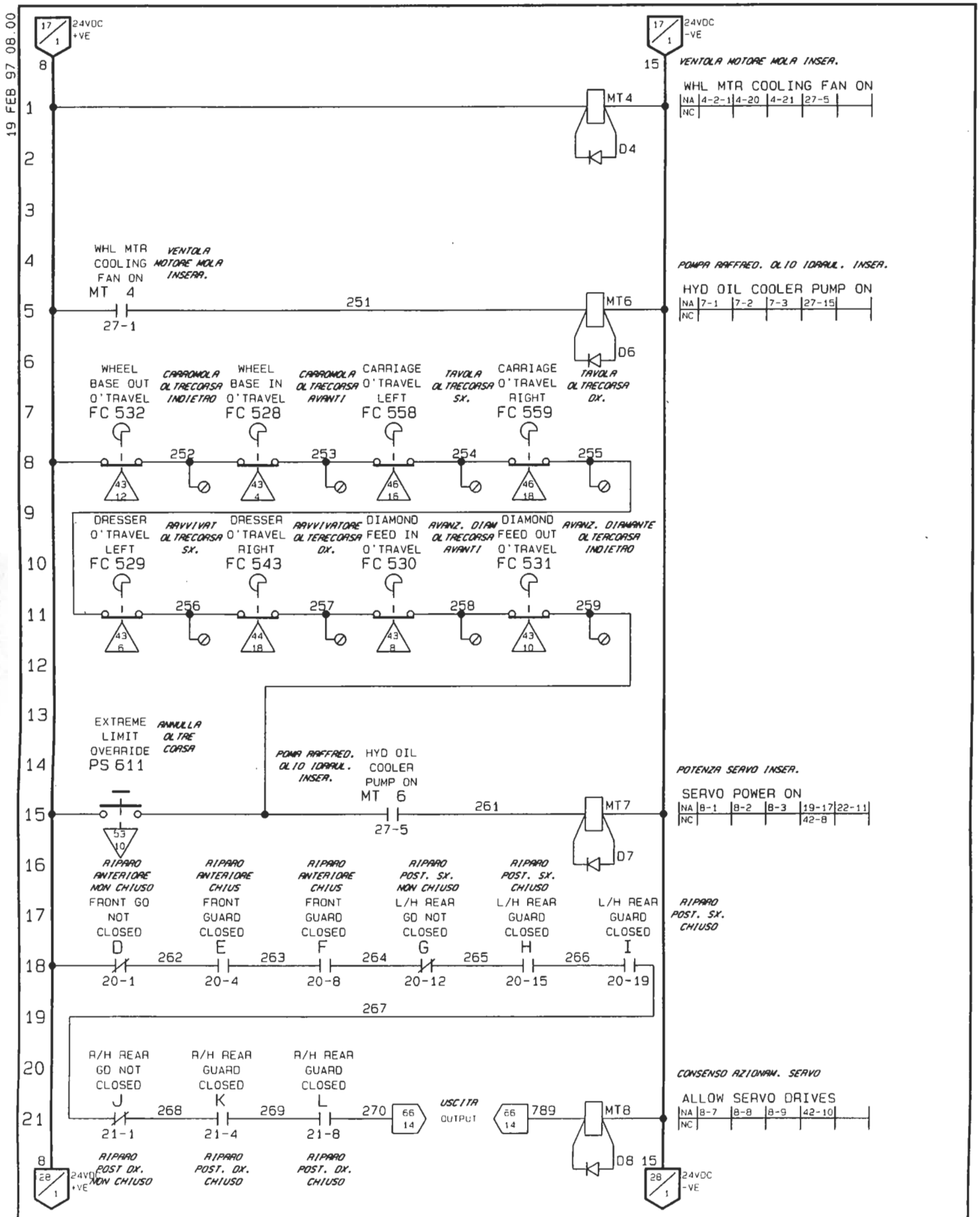
19 FEB 97 08.00
17/1 24VDC +VE
17/1 24VDC -VE
VENTOLA MOTORE MOLA INSER.
WHL MTR COOLING FAN ON
NA 4-2-1 4-20 4-21 27-5
NC
MT4
D4
WHL MTR COOLING FAN ON
MT 4
27-1
VENTOLA MOTORE MOLA INSERR.
251
MT6
D6
POMPA RAFFRED. OLIO IDRAUL. INSER.
HYD OIL COOLER PUMP ON
NA 7-1 7-2 7-3 27-15
NC
WHEEL BASE OUT O'TRAVEL FC 532
CARROMOLA OLTRECORSA INDIETRO
WHEEL BASE IN O'TRAVEL FC 528
CARROMOLA OLTRECORSA AVANTI
CARRIAGE O'TRAVEL LEFT FC 558
TAVOLA OLTRECORSA SX.
CARRIAGE O'TRAVEL RIGHT FC 559
TAVOLA OLTRECORSA DX.
252 253 254 255
43 12
43 4
46 16
46 18
DRESSER O'TRAVEL LEFT FC 529
AVVIVAT OLTRECORSA SX.
DRESSER O'TRAVEL RIGHT FC 543
AVVIVATORE OLTERECORSA DX.
DIAMOND FEED IN O'TRAVEL FC 530
AVANZ. DIAM OLTRECORSA AVANTI
DIAMOND FEED OUT O'TRAVEL FC 531
AVANZ. DIAMANTE OLTERCORSA INDIETRO
256 257 258 259
43 6
44 18
43 8
43 10
EXTREME LIMIT OVERRIDE PS 611
ANNULLA OLTRE CORSA
53 10
POMA RAFFRED. OLIO IDRAUL. INSER.
HYD OIL COOLER PUMP ON
MT 6
27-5
261
MT7
D7
POTENZA SERVO INSER.
SERVO POWER ON
NA 8-1 8-2 8-3 19-17 22-11
NC 42-8
RIPARO ANTERIORE NON CHIUSO
FRONT GO NOT CLOSED
D
20-1
262
RIPARO ANTERIORE CHIUS
FRONT GUARD CLOSED
E
20-4
263
RIPARO ANTERIORE CHIUS
FRONT GUARD CLOSED
F
20-8
264
RIPARO POST. SX. NON CHIUSO
L/H REAR GO NOT CLOSED
G
20-12
265
RIPARO POST. SX. CHIUSO
L/H REAR GUARD CLOSED
H
20-15
266
L/H REAR GUARD CLOSED
I
20-19
RIPARO POST. SX. CHIUSO
267
R/H REAR GO NOT CLOSED
J
21-1
268
R/H REAR GUARD CLOSED
K
21-4
269
R/H REAR GUARD CLOSED
L
21-8
270
66 14
USCITA OUTPUT
66 14
789
MT8
D8
CONSENSO AZIONAM. SERVO
ALLOW SERVO DRIVES
NA 8-7 8-8 8-9 42-10
NC
RIPARO POST DX. NON CHIUSO
RIPARO POST. DX. CHIUSO
RIPARO POST. DX. CHIUSO
28/1 24VDC +VE
28/1 24VDC -VE

| | | |

19 FEB 97 08.00

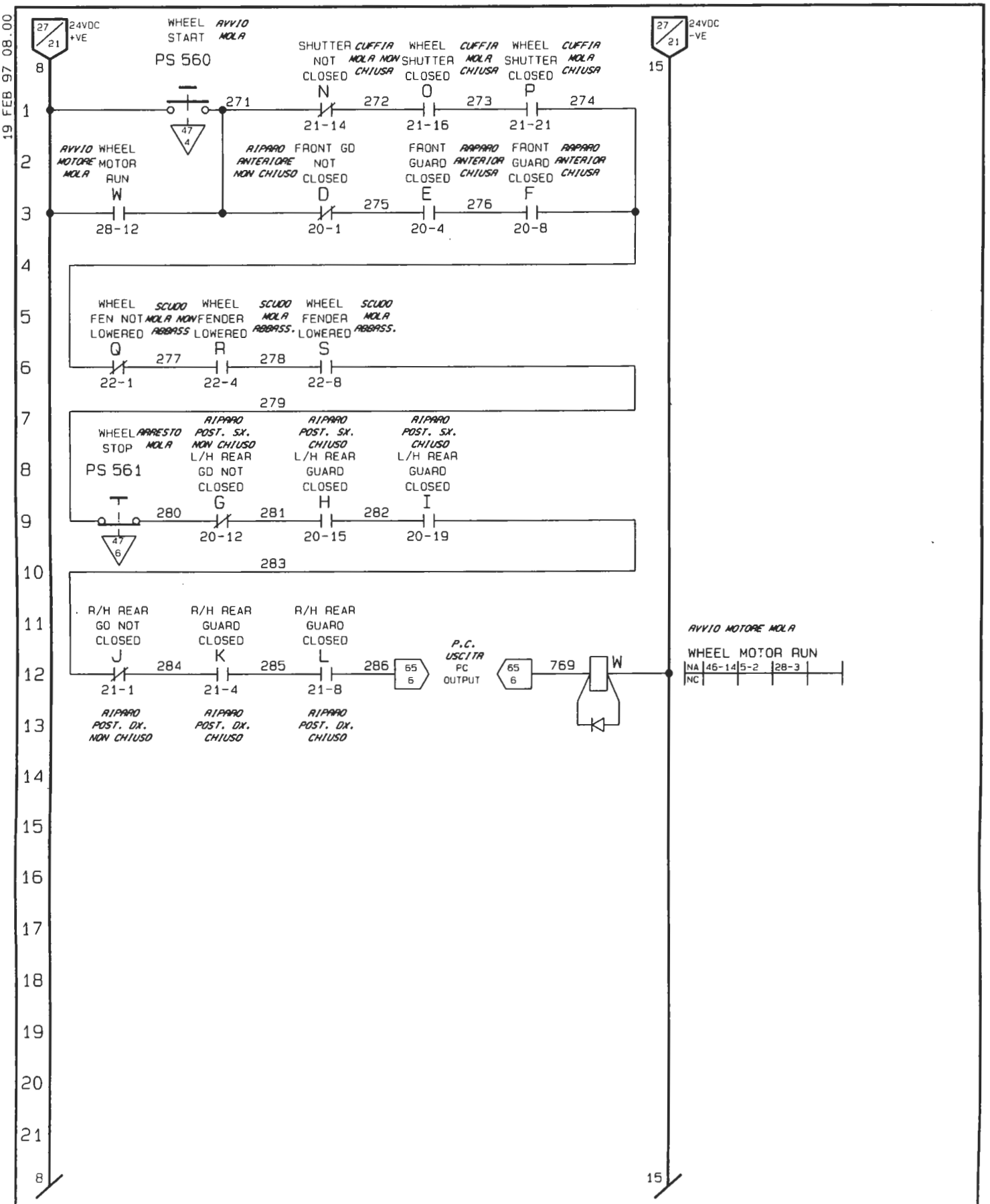

| | | |

19 FEB 97 08.00

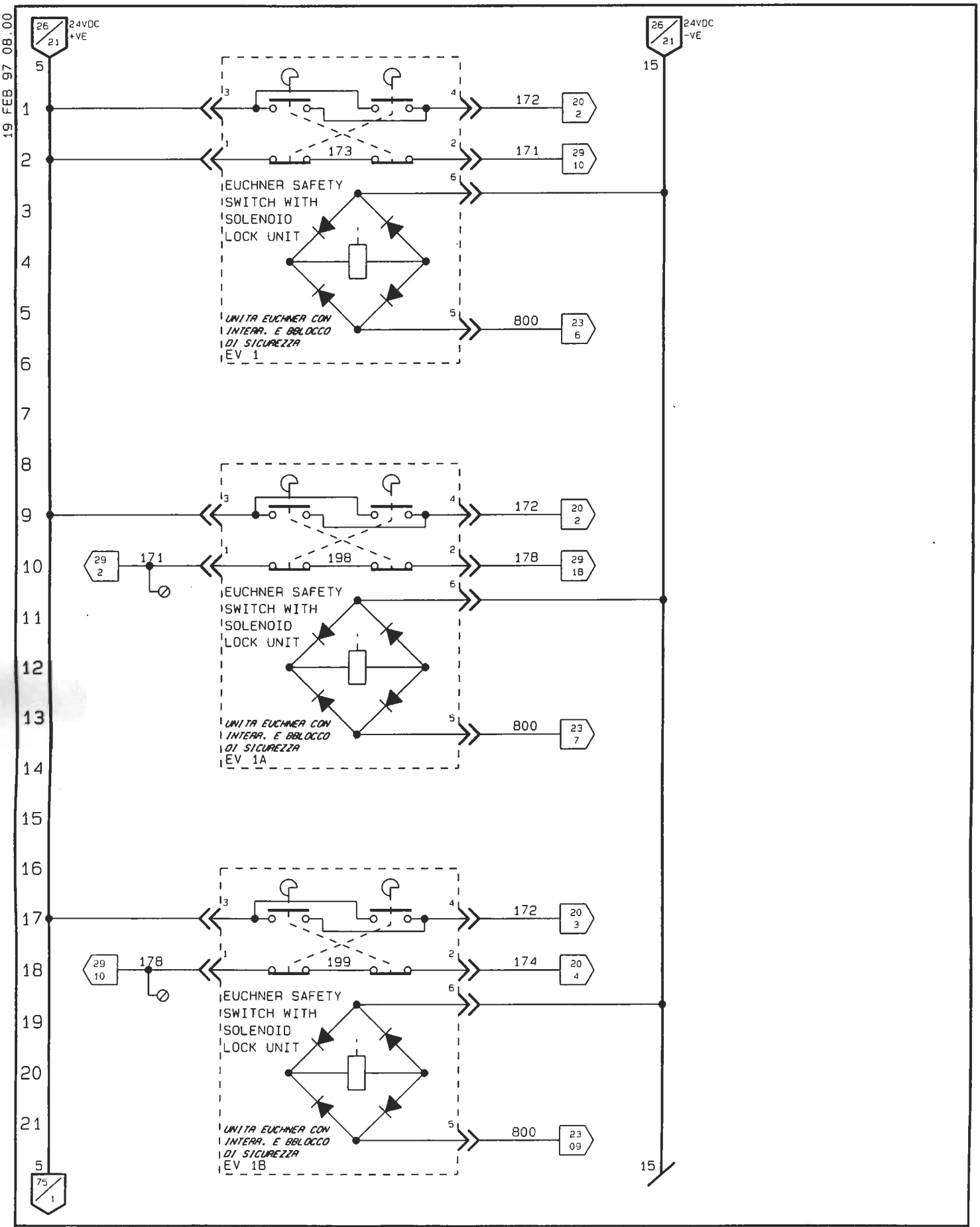

DRAWN																	
RDP																	
CHECKED																	
APPROVED																	
LAYOUT APP'D																	

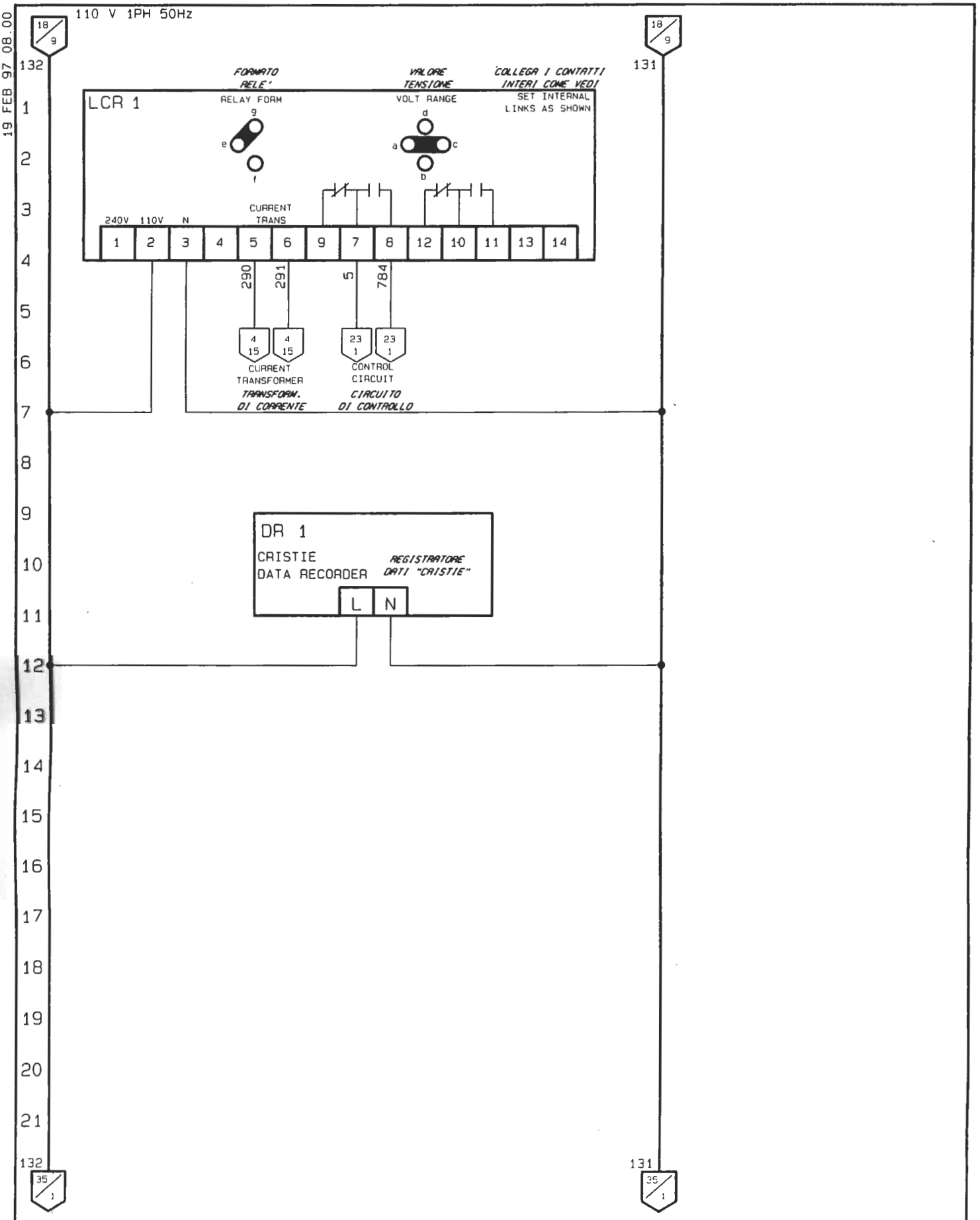
19 FEB 97 08.00
110 V 1PH 50Hz
18/9
132
131
FORMATO RELE'
RELAY FORM
VALORE TENSIONE
VOLT RANGE
COLLEGA I CONTATTI INTERI COME VEDI
SET INTERNAL LINKS AS SHOWN
LCR 1
CURRENT TRANS
240V 110V N
1 2 3 4 5 6 9 7 8 12 10 11 13 14
290
291
5
784
4 15
23 1
CURRENT TRANSFORMER
TRANSFORM. DI CORRENTE
CONTROL CIRCUIT
CIRCUITO DI CONTROLLO
DR 1
CRISTIE DATA RECORDER
REGISTRATORE DATI "CRISTIE"
L N
35/1

| | | |

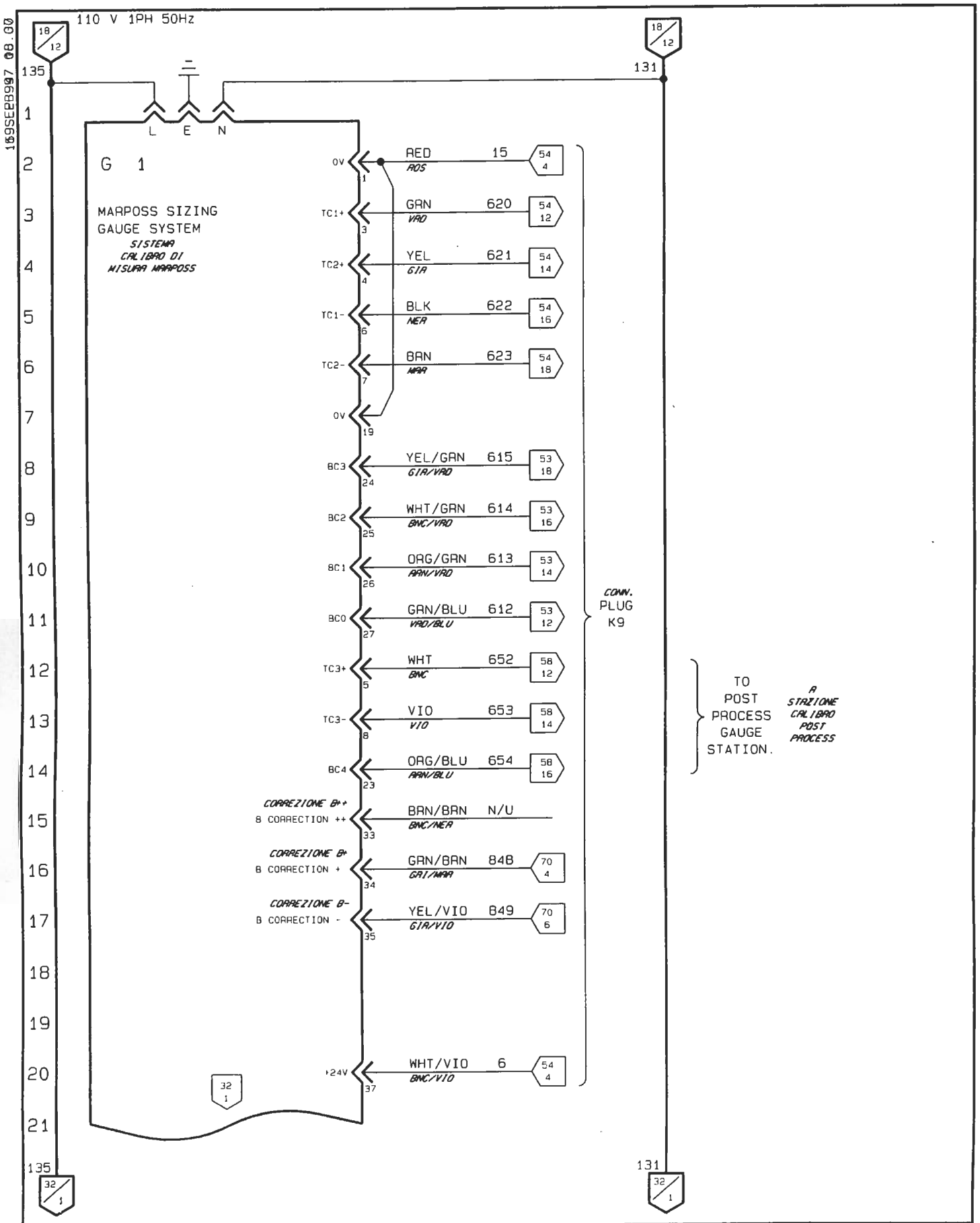

DRAWN: RDP	TITLE: RELAY SCHEMATIC. / SCHEMI ELECTRICI RELE'	FMA	MICROFILM
CHECKED			REF. DRG —
APPROVED		EY01529	SHEET 31
LAYOUT APP'D	M/C No 318-89		SHEETS 150

CHANGES: NAME / DATE / C.I.

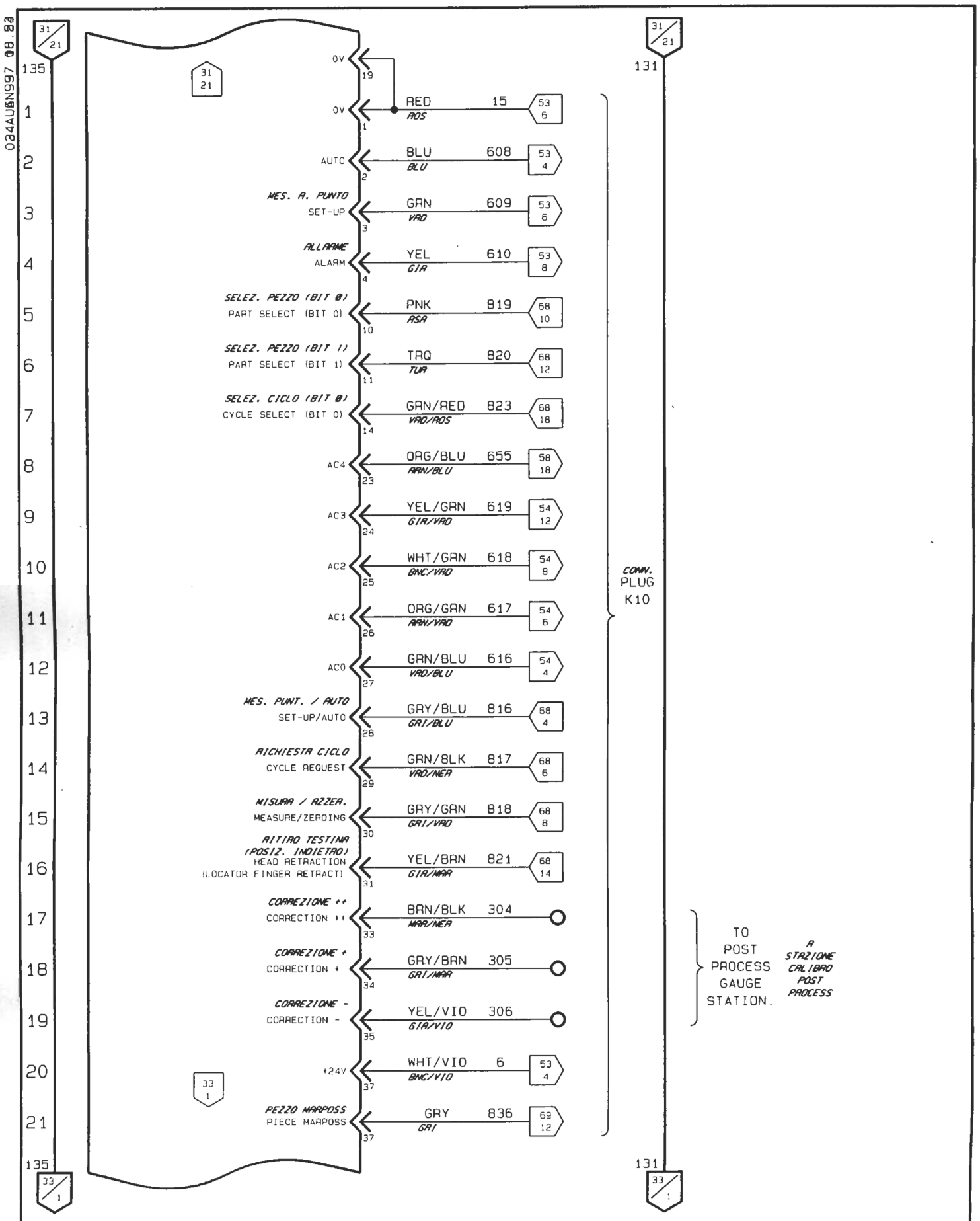

DRAWN RDP	NAME JUC	TITLE RELAY SCHEMATIC. SCHEMI ELECTRICI RELE'	MICROFILM
CHECKED	DATE 24.1.97		REF. DRG –
APPROVED	C.I. MMU775		SHEET 32
LAYOUT APP'D	CHANGES	M/C No 318-89	SHEETS 150

FMA

EY01529

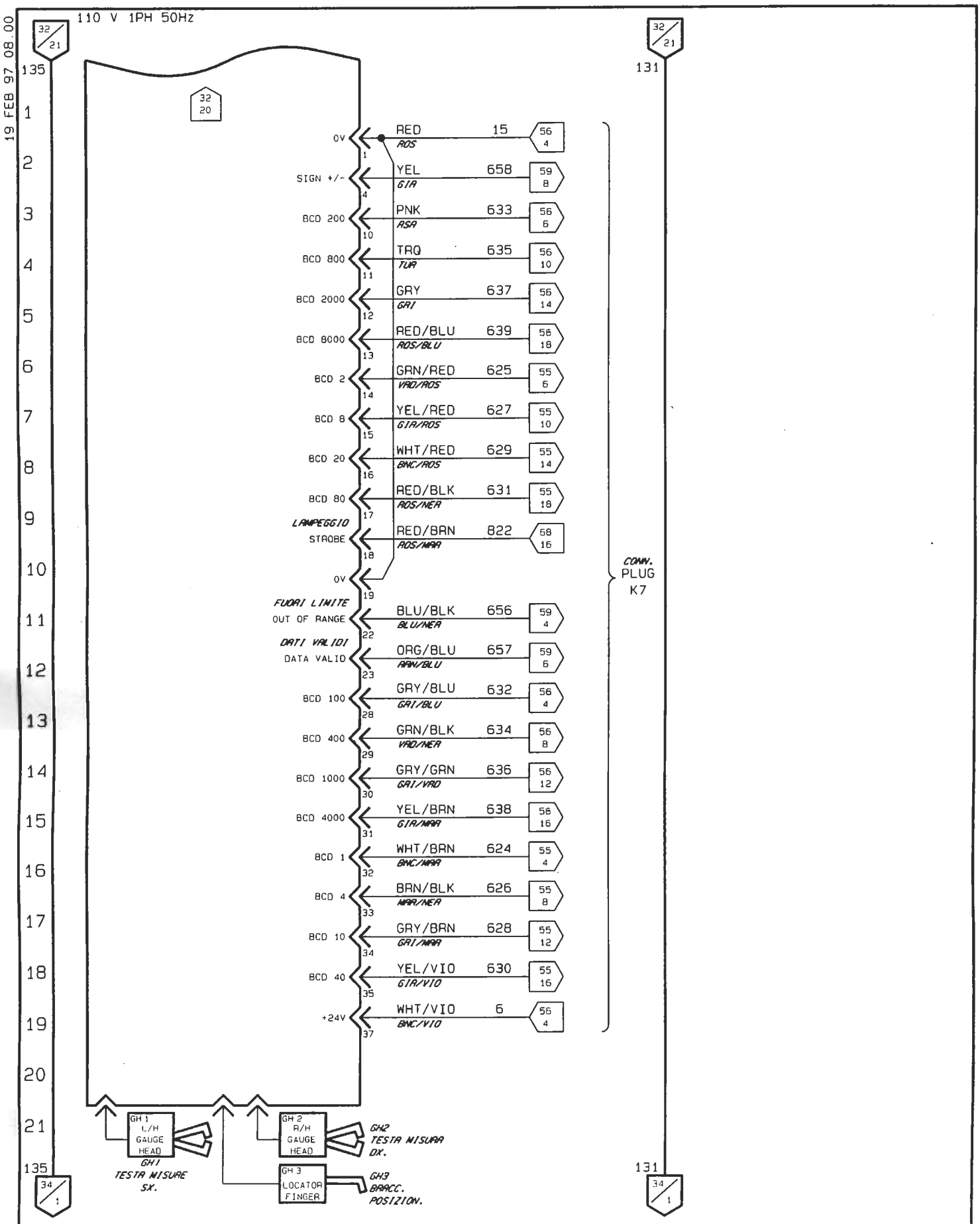

DRAWN RDP	TITLE RELAY SCHEMATIC. SCHEMI ELECTRICI RELE'	FMA	MICROFILM	
CHECKED			REF.DRG –	
APPROVED		EY01529	SHEET 33	
LAYOUT APP'D	M/C No 318-89		SHEETS 150	

CHANGES — NAME / DATE / C.I.

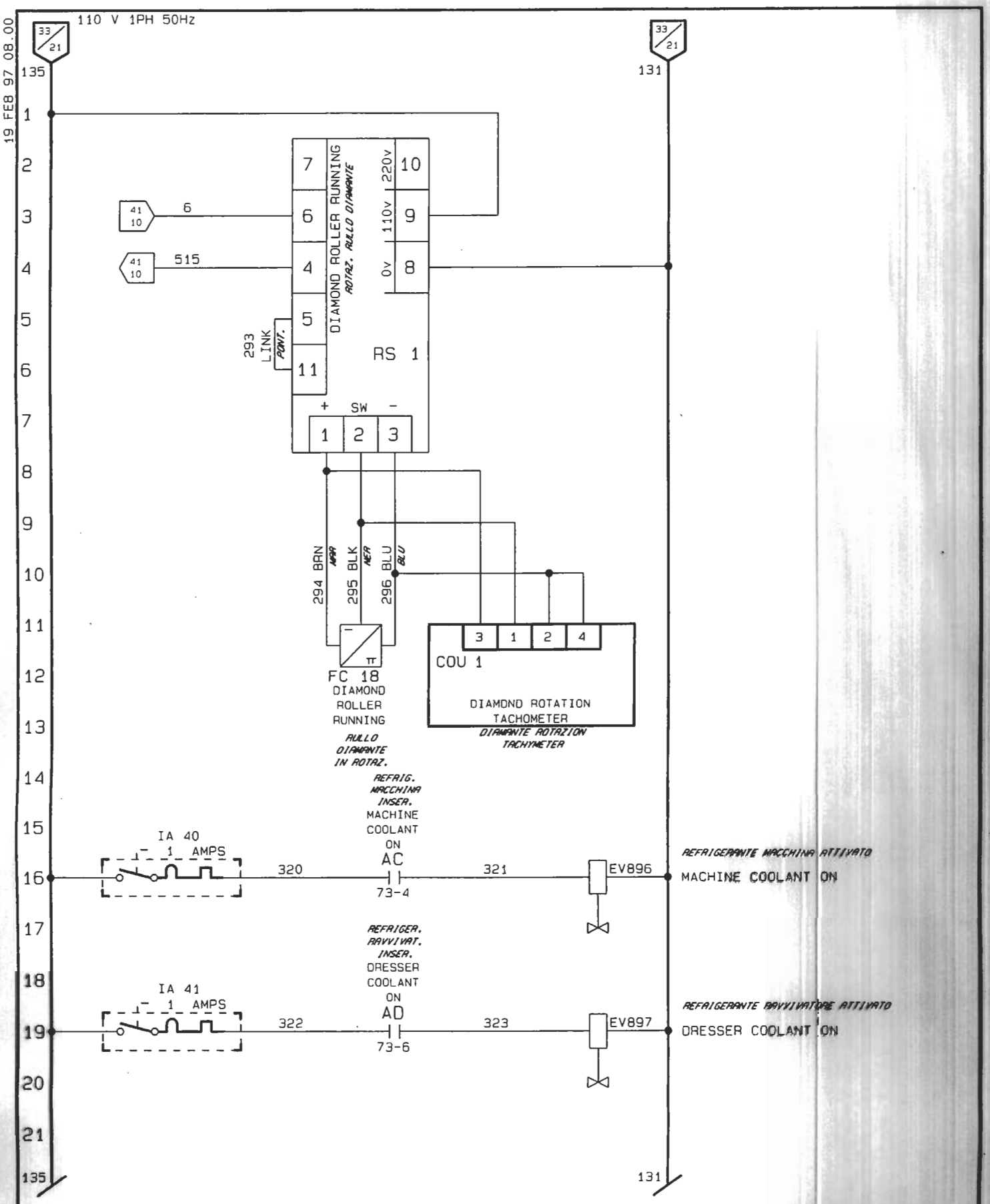
19 FEB 97 08.00
110 V 1PH 50Hz
33/21
135
131
DIAMOND ROLLER RUNNING
ROTAZ. RULLO DIAMANTE
RS 1
220v
110v
0v
7
6
4
5
11
10
9
8
41 10
6
515
293 LINK
PONT.
+ SW -
1 2 3
294 BRN
295 BLK
296 BLU
FC 18
DIAMOND ROLLER RUNNING
RULLO DIAMANTE IN ROTAZ.
COU 1
3 1 2 4
DIAMOND ROTATION TACHOMETER
DIAMANTE ROTAZION TACHYMETER
REFRIG. MACCHINA INSER.
MACHINE COOLANT ON
AC
73-4
IA 40
1 AMPS
320
321
EV896
REFRIGERANTE MACCHINA ATTIVATO
MACHINE COOLANT ON
REFRIGER. RAVVIVAT. INSER.
DRESSER COOLANT ON
AD
73-6
IA 41
1 AMPS
322
323
EV897
REFRIGERANTE RAVVIVATORE ATTIVATO
DRESSER COOLANT ON

| | | |

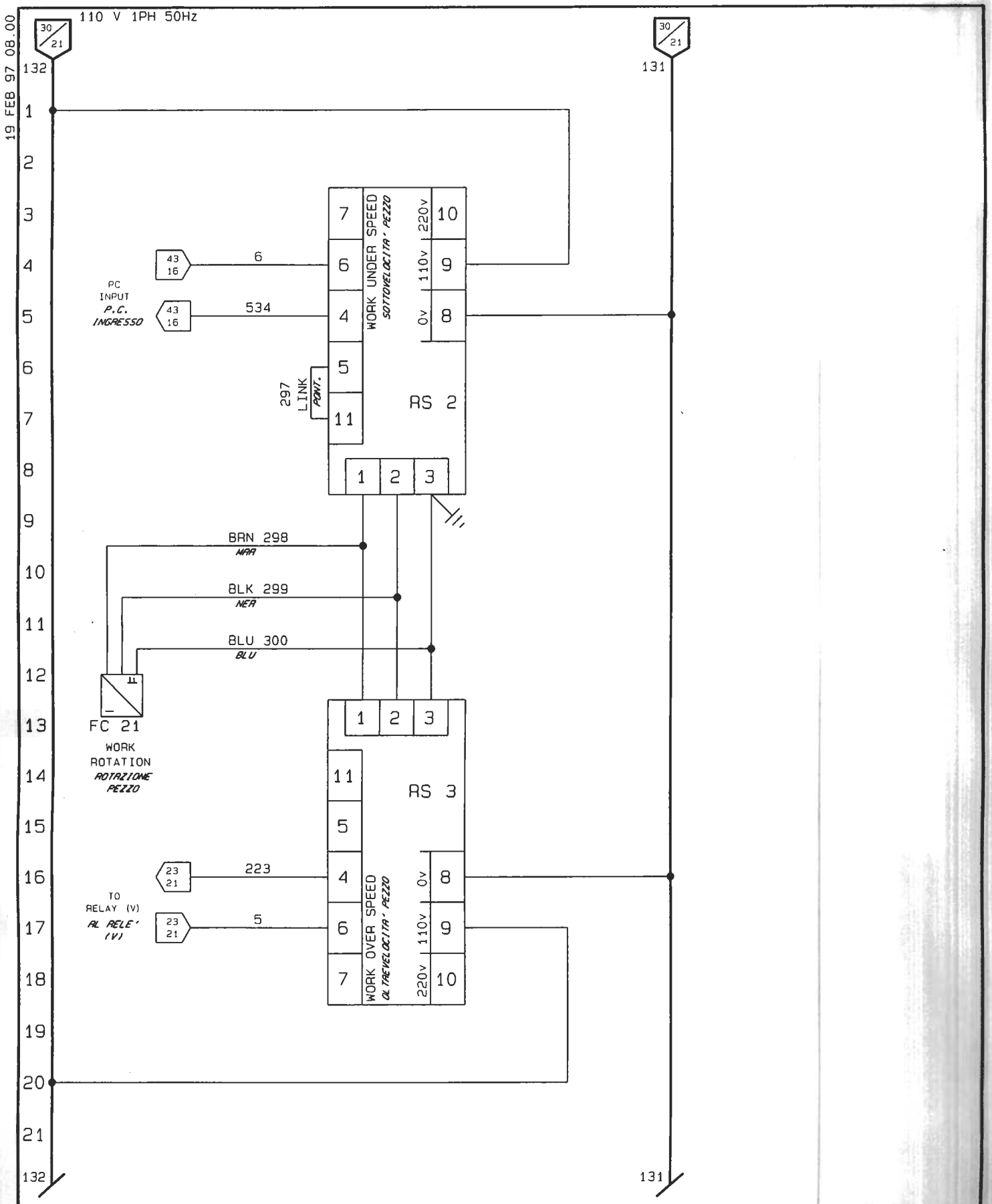

DRAWN RDP																		
CHECKED																		
APPROVED																		
LAYOUT APP'D																		

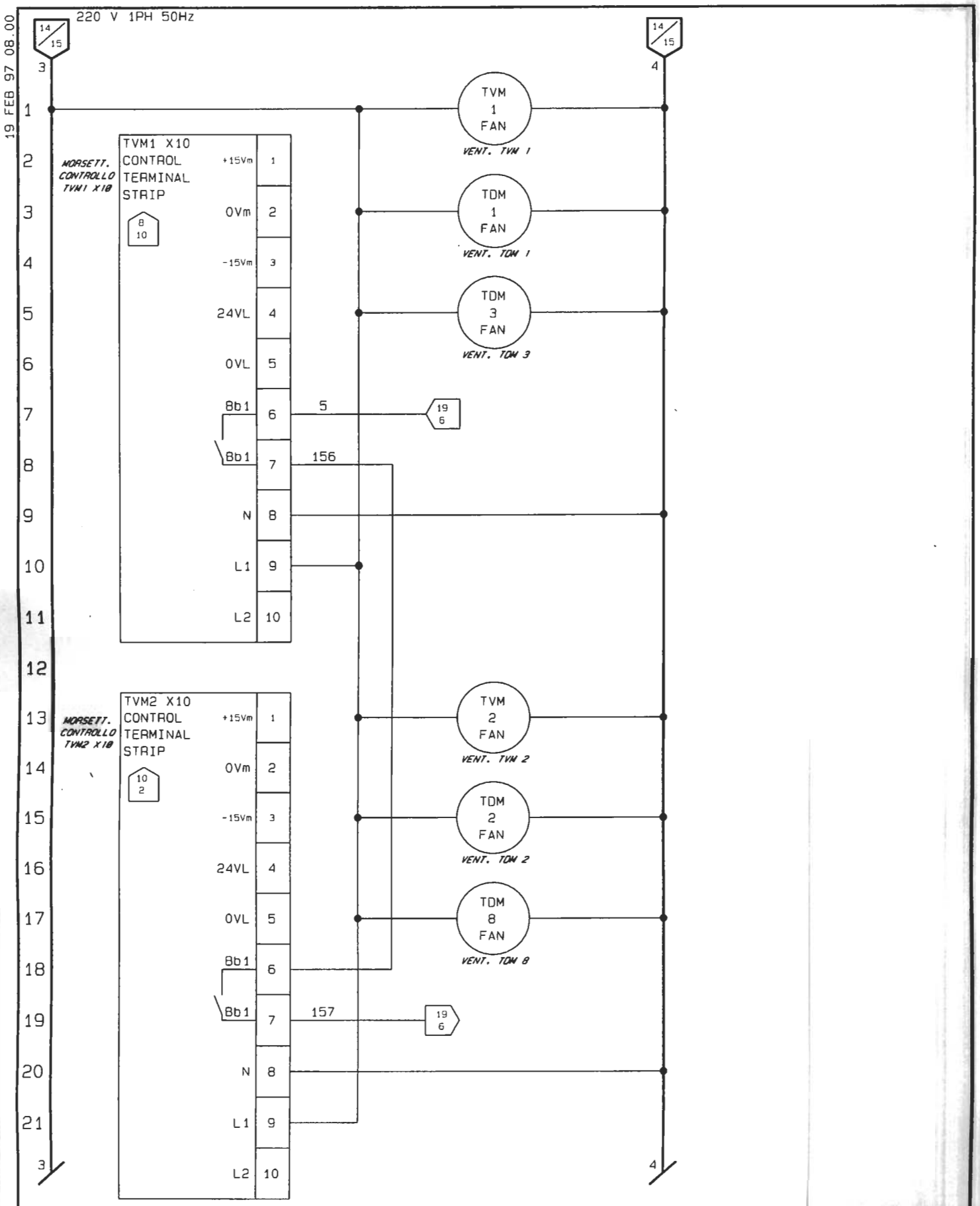
19 FEB 97 08.00
220 V 1PH 50Hz
14/15
3
4
TVM1 X10
CONTROL
TERMINAL
STRIP
MORSETT. CONTROLLO TVM1 X10
+15Vm
0Vm
-15Vm
24VL
0VL
Bb1
N
L1
L2
TVM 1 FAN
VENT. TVM 1
TDM 1 FAN
VENT. TDM 1
TDM 3 FAN
VENT. TDM 3
5
156
TVM2 X10
CONTROL
TERMINAL
STRIP
MORSETT. CONTROLLO TVM2 X10
TVM 2 FAN
VENT. TVM 2
TDM 2 FAN
VENT. TDM 2
TDM 8 FAN
VENT. TDM 8
157

| | | |

19 FEB 97 08.00

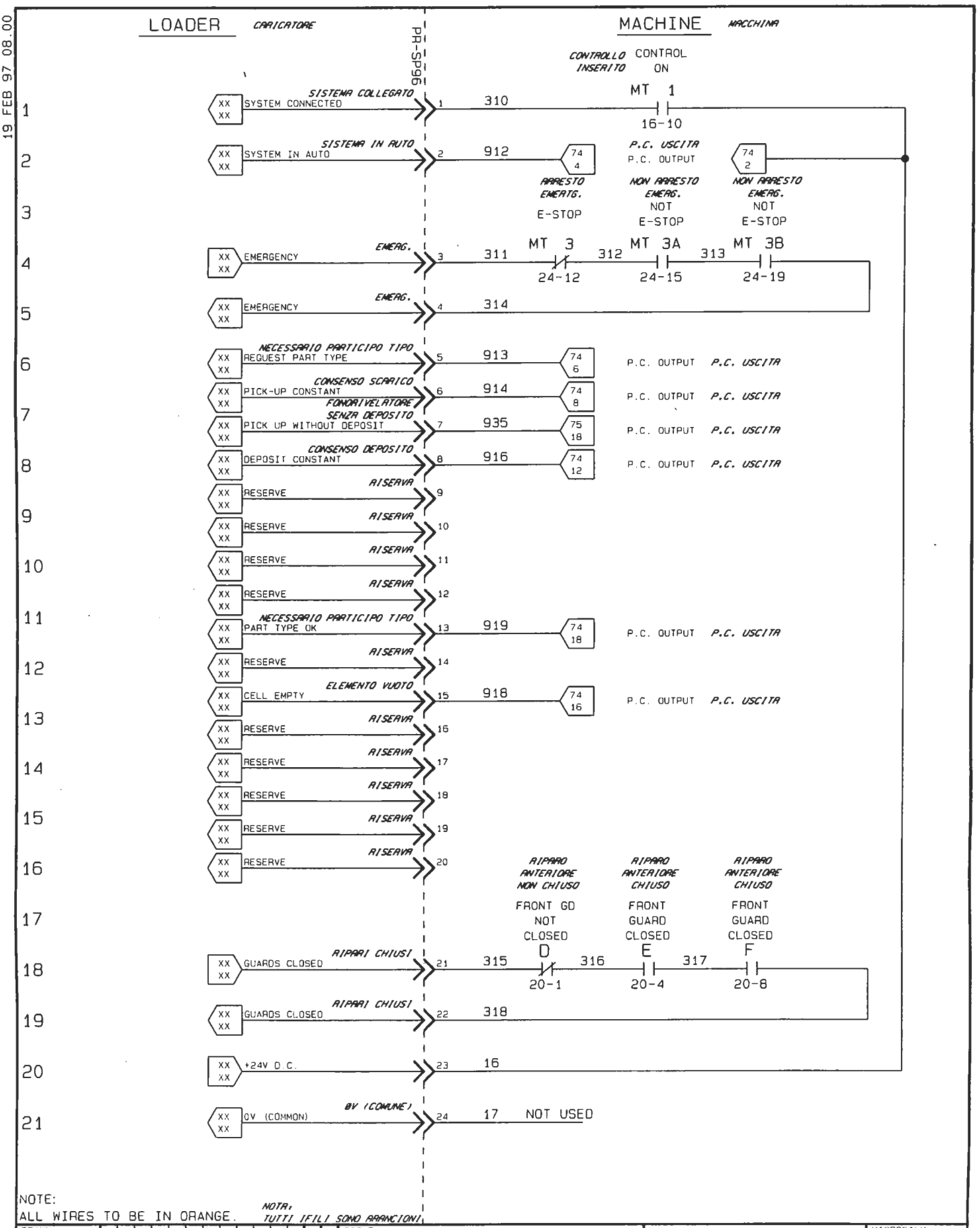

NOTE:
ALL WIRES TO BE IN ORANGE.
NOTA:
TUTTI I FILI SONO ARANCIONI

| | | |

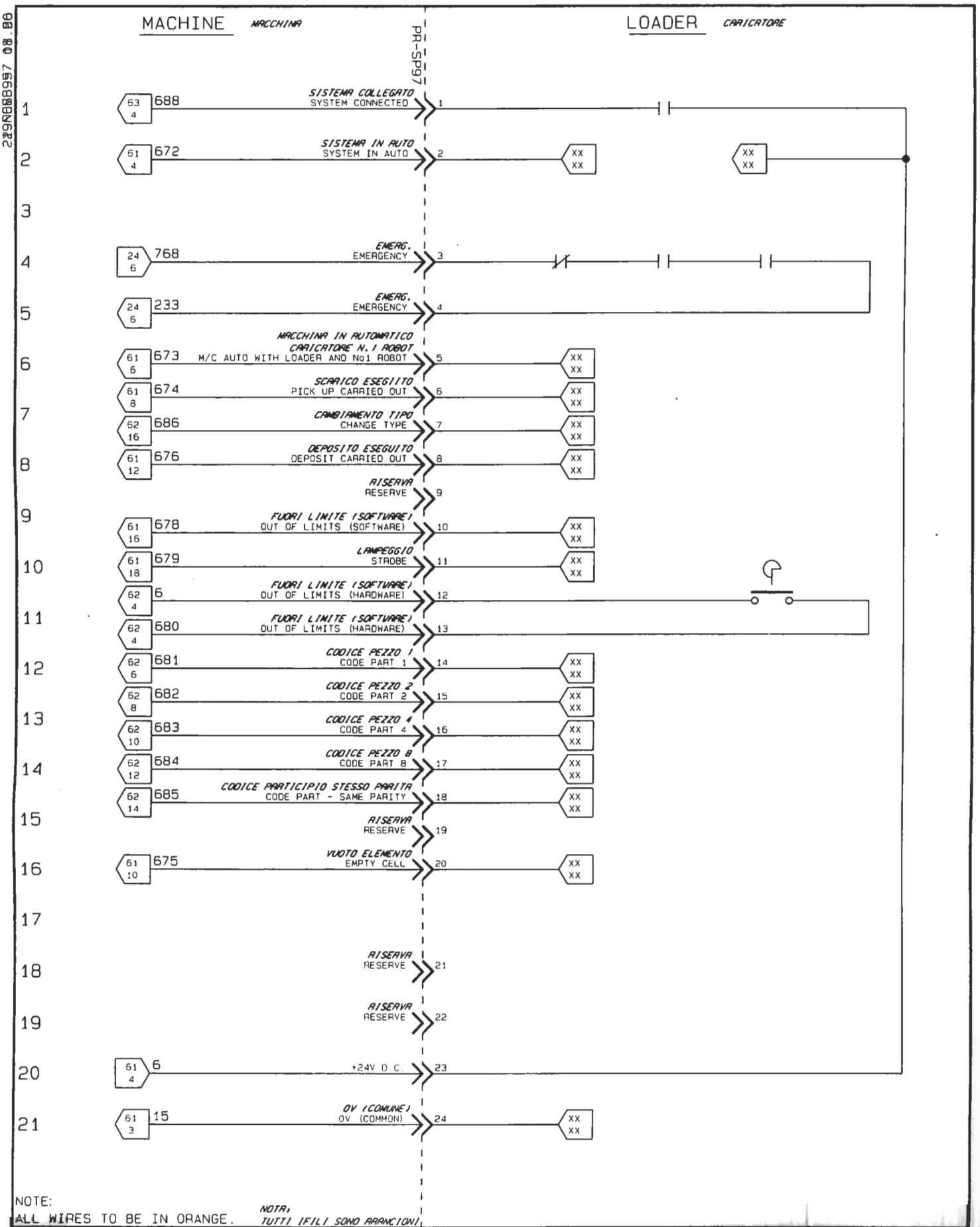

NOTE:
ALL WIRES TO BE IN ORANGE. NOTA: TUTTI I FILI SONO ARANCIONI

DRAWN RDP					KE	KE	KE	KE	KE	KE	KE	KE	KE	NAME	CHANGES	TITLE LOADER INTERLOCKS. INTERBLOCCHI CARICO/SCHRICO (CARICATORE)	MICROFILM
CHECKED					17-02-97	17-02-97	17-02-97	17-02-97	17-02-97	17-02-97	17-02-97	17-02-97	17-02-97	DATE			REF.DRG –
APPROVED																	SHEET 38
LAYOUT APP'D					4/0 95858	4/0 97833	4/0 97287	4/0 97562	4/0 97545	4/0 95607	4/0 96950	4/0 97032		C.I.		M/C No 318-89	SHEETS 150

EY01529

16SEP1997 08.00

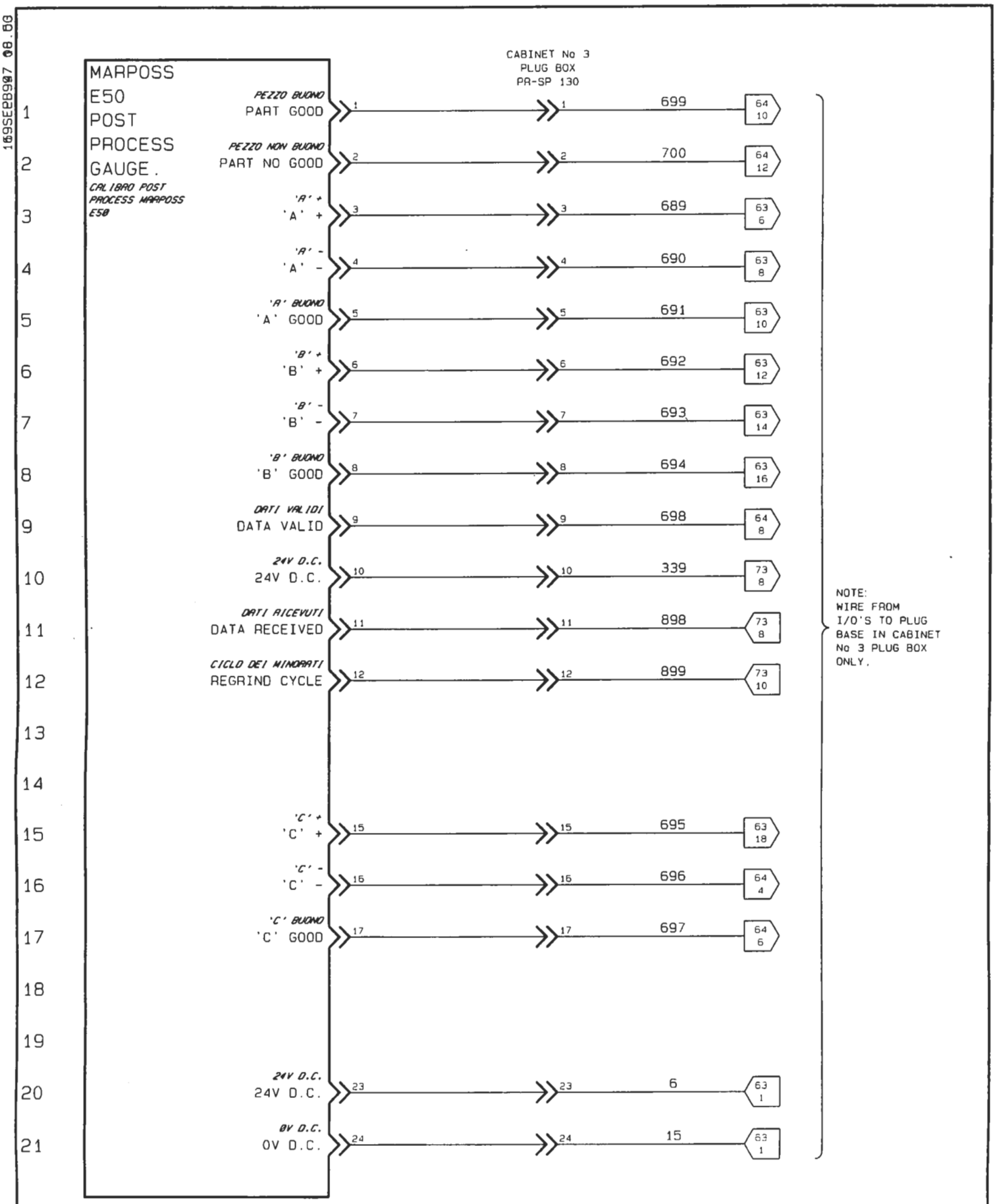

DRAWN RDP						KE	KE	KE	KE	KE	KE	KE	KE	NAME	CHANGES	TITLE MARPOSS E50 POST PROCESS GAUGE. CALIBRO POST PROCESS MARPOSS E50	FMA	MICROFILM
CHECKED						17-02-97	17-02-97	17-02-97	17-02-97	17-02-97	17-02-97	17-02-97	17-02-97	DATE				REF.DRG –
APPROVED						W/O 95898	W/O 97833	W/O 97287	W/O 97652	W/O 97645	W/O 96607	W/O 96950	W/O 97032	C.I.		M/C No 318-89	EY01529	SHEET 39
LAYOUT APP'D																		SHEETS 150

169SE28997 08.00

FMA

MONITORING

MONITORIZZAZIONE FMA

CABINET No 3
PLUG BOX
PR-SP 131

1	24V D.C. / 24V D.C.	21			
2	MACCHINA FUNZIONA IN CICLO AUTOMATICO CONTINUO / MACHINE RUNNING IN CONTINUOUS AUTRO CYCLE	1	928	75 4	
3	MACCHINA FERMA GUASTO GENERALE / MACHINE DOWN GENERAL FAILURE	2	929	75 6	
4	MACCHINA FERMA NON CARICARE / MACHINE DOWN NO LOADING	3	930	75 8	
5	MACCHINA FERMA NON E' POSSIBLE LO SCARICO / MACHINE DOWN UNLOADING NOT POSSIBLE	4	931	75 10	
6	MACCHINA FERMA CAMBIO UTENSILE PROGRAMMATO / MACHINE DOWN PROGRAMMED TOOL CHANGE	5	932	75 12	
7	-				
8	ARRESTO NON SPECIFICATO / UNSPECIFIED SHUT DOWN	8	934	75 16	
9	CICLO IN FUNZIONE / CYCLE IN PROGRESS	9	944	76 4	
10	IMPULSO DEL CONTAPEZZO / PART COUNTER PULSE	10	945	76 6	
11	IMPULSO CONTATORE SCARTI / REJECT COUNTER PULSE	11	946	76 8	
12	IDENTIFICAZIONE PEZZO TIPO T1 / T1 WORK PIECE TYPE IDENTIFICATION SIGNAL	12	947	76 10	
13	IDENTIFICAZIONE PEZZO TIPO T2 / T2 WORK PIECE TYPE IDENTIFICATION SIGNAL	13	948	76 12	
14	IDENTIFICAZIONE PEZZO TIPO T3 / T3 WORK PIECE TYPE IDENTIFICATION SIGNAL	14	949	76 14	
15	IDENTIFICAZIONE PEZZO TIPO T4 / T4 WORK PIECE TYPE IDENTIFICATION SIGNAL	15	950	76 16	
16	SEGNALE DI PARITA' T5 PER I SEGNALI T1-T4 / T5 PARITY SIGNAL FOR T1-T4 SIGNALS	16			
17	0V D.C. / 0V D.C.	22	15-	76 21	
18	24V D.C. / 24V D.C.	23	5+	76 21	
19					
20					
21					

24 PIN SOCKET.
PIN's 6, 7, 16, 17, 18, 19, 20 & 21 ARE NOT USED.

NOTE:
ALL THE WIRES MUST BE ORANGE.

NOTE:
WIRE FROM I/O'S TO PLUG BASE IN CABINET No 3 PLUG BOX ONLY.

DRAWN RDP					KE	KE	KE	KE	KE	KE	KE	KE	KE	NAME	CHANGES	TITLE	MICROFILM
CHECKED					17-02-97	17-02-97	17-02-97	17-02-97	17-02-97	17-02-97	17-02-97	17-02-97	17-02-97	DATE		FMA MONITORING.	REF.DRG -
APPROVED					W/O 98888	W/O 97833	W/O 97287	W/O 97652	W/O 97645	W/O 96607	W/O 96596	W/O 97032		C.I.		MONITORIZZAZIONE FMA	SHEET 40
LAYOUT APP'D																M/C No 318-89	SHEETS 150

FMA

EY01529

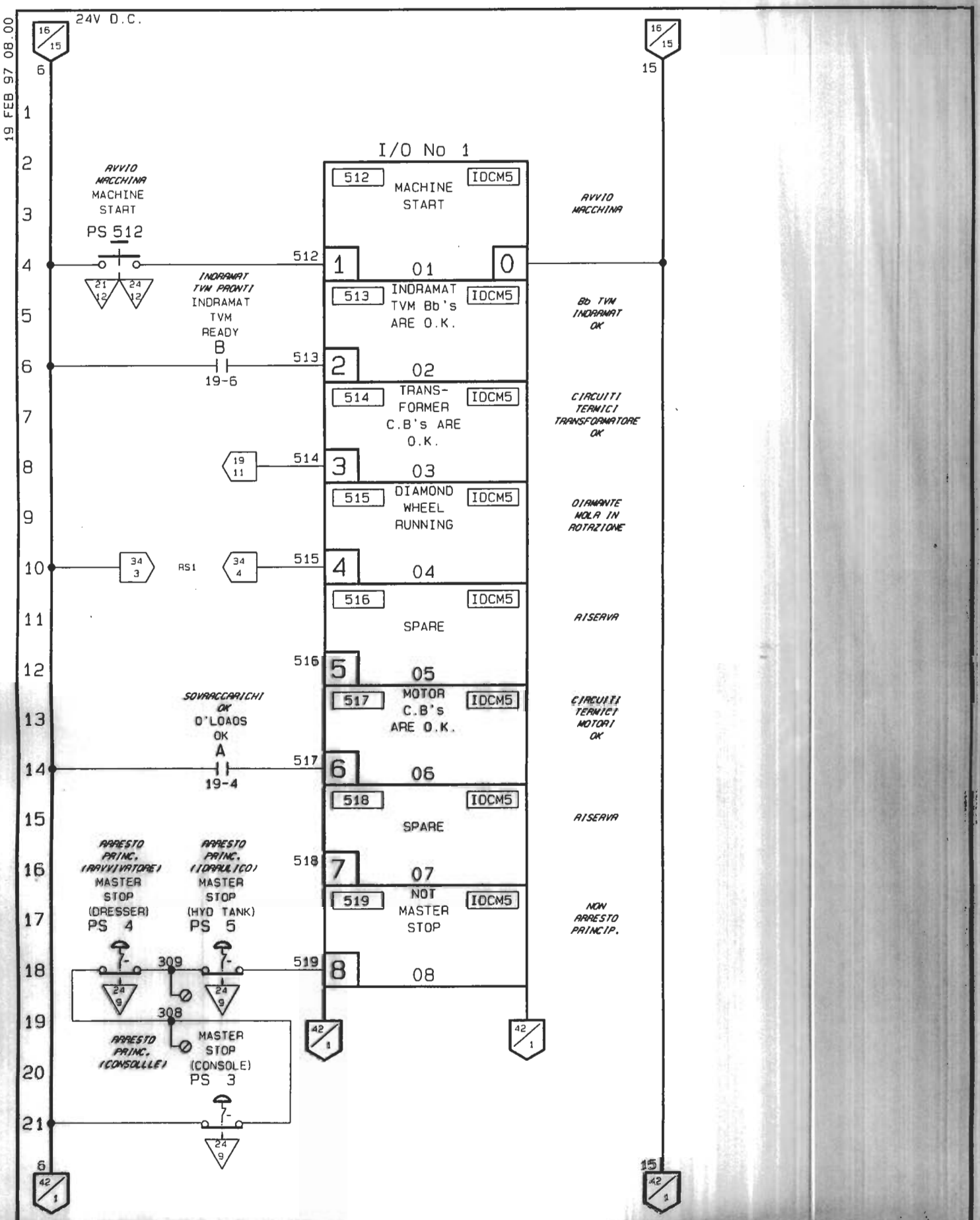
19 FEB 97 08.00
24V D.C.
I/O No 1
AVVIO MACCHINA
MACHINE START
PS 512
512
MACHINE START
IDCM5
AVVIO MACCHINA
INDRAMAT TVM PRONTI
INDRAMAT TVM READY
B
19-6
513
INDRAMAT TVM Bb's ARE O.K.
Bb TVM INDRAMAT OK
514
TRANS-FORMER C.B's ARE O.K.
CIRCUITI TERMICI TRANSFORMATORE OK
515
DIAMOND WHEEL RUNNING
DIAMANTE MOLA IN ROTAZIONE
RS1
516
SPARE
RISERVA
SOVRACCARICHI OK
O'LOADS OK
A
19-4
517
MOTOR C.B's ARE O.K.
CIRCUITI TERMICI MOTORI OK
518
SPARE
RISERVA
ARRESTO PRINC. (RAVVIVATORE)
MASTER STOP (DRESSER)
PS 4
ARRESTO PRINC. (IDRAULICO)
MASTER STOP (HYD TANK)
PS 5
519
NOT MASTER STOP
NON ARRESTO PRINCIP.
309
308
ARRESTO PRINC. (CONSOLLE)
MASTER STOP (CONSOLE)
PS 3

| | | |

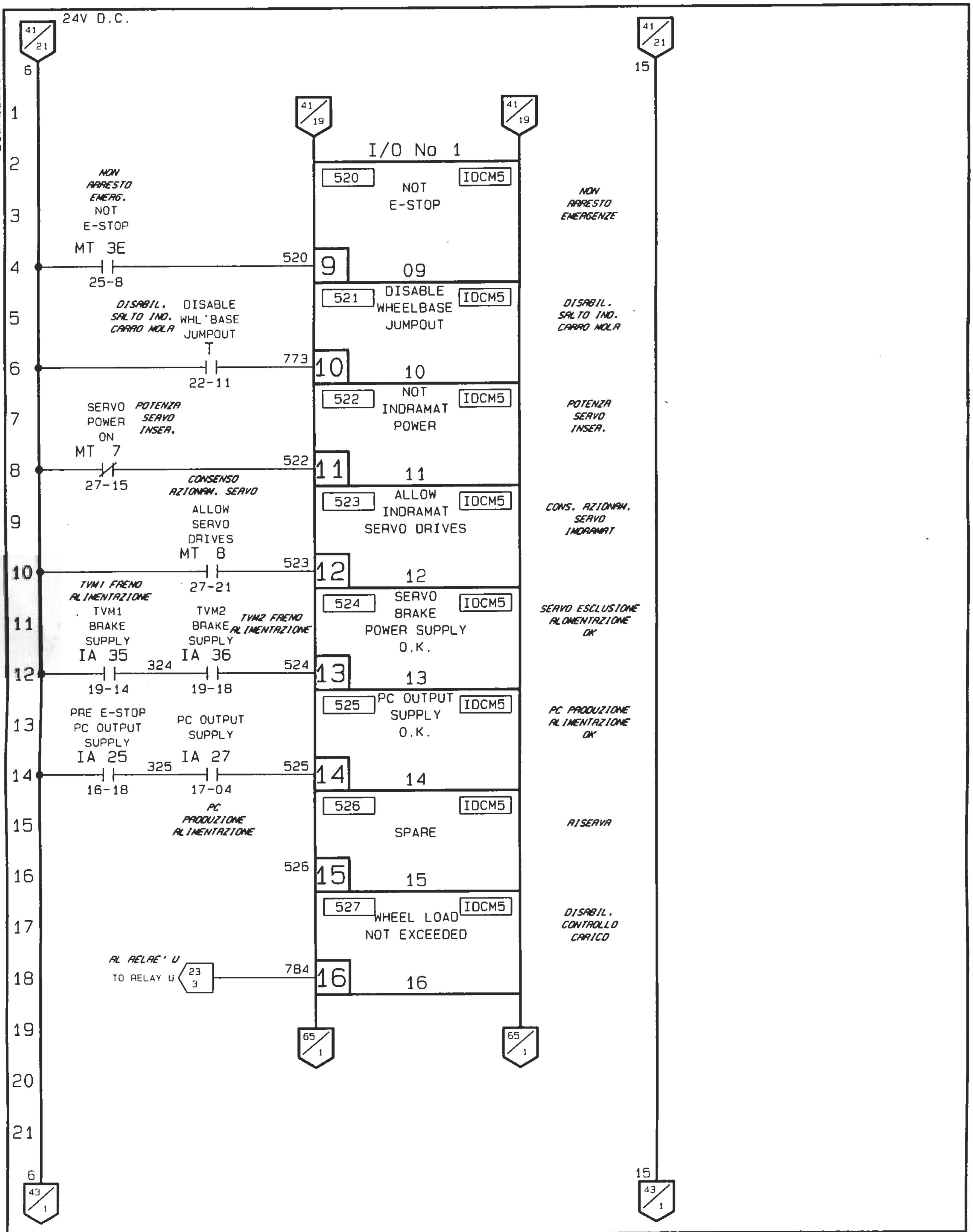

219FEB8997 08.80

DRAWN	RDP
CHECKED	
APPROVED	
LAYOUT APP'D	

NAME	DATE	C.I.
KE	17-02-97	W/O 97032
KE	17-02-97	W/O 96950
KE	17-02-97	W/O 96507
KE	17-02-97	W/O 97645
KE	17-02-97	W/O 97662
KE	17-02-97	W/O 97287
KE	17-02-97	W/O 97833
KE	17-02-97	W/O 95958

CHANGES

TITLE

P.C. INPUTS.

P.C. INGRESSI

M/C No 318-89

FMA

EY01529

MICROFILM

REF. DRG –

SHEET 42

SHEETS 150

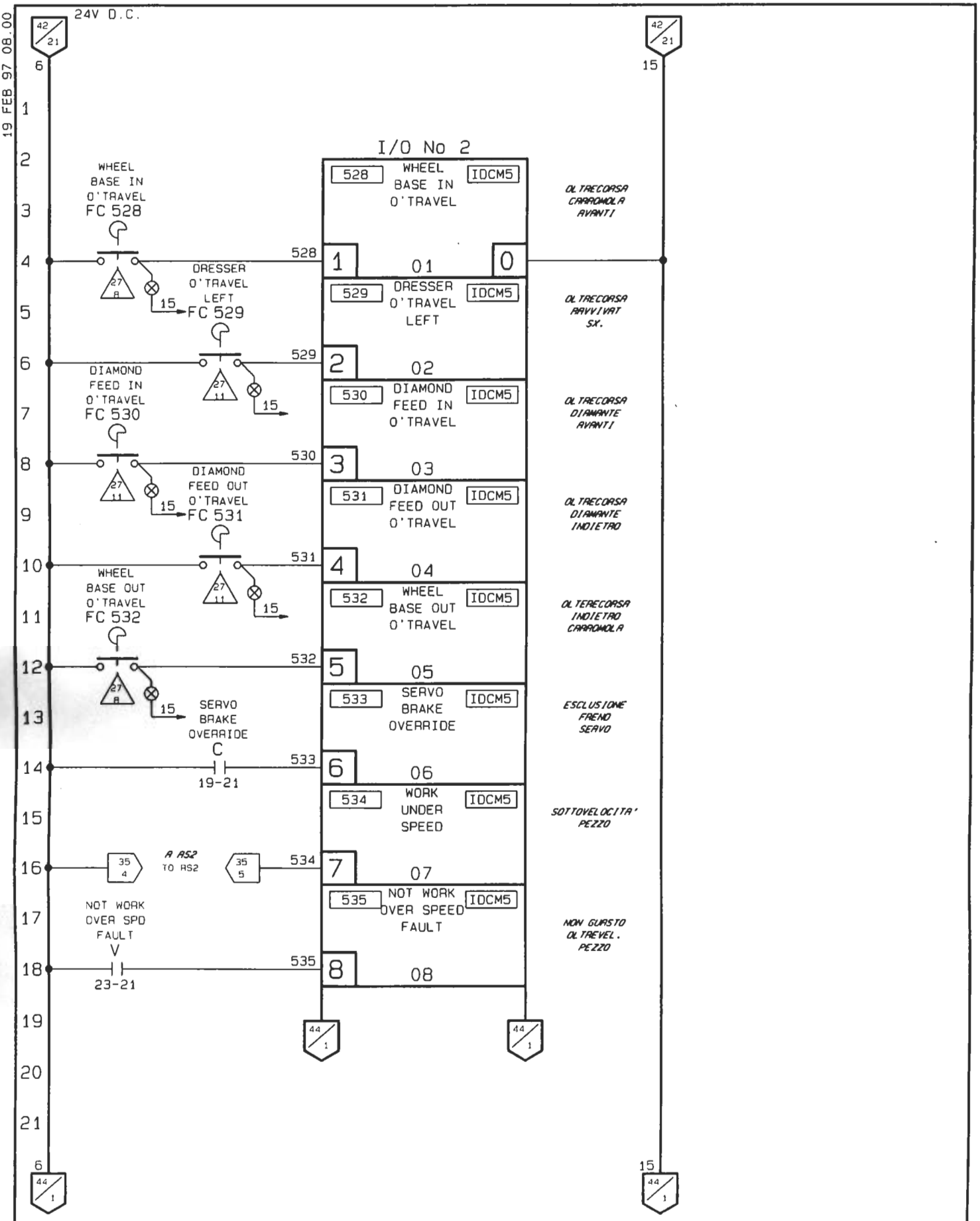

DRAWN RDP	NAME	TITLE P.C. INPUTS. *P.C. INGRESSI*	MICROFILM
CHECKED	DATE		REF. DRG –
APPROVED	C.I.		SHEET 43
LAYOUT APP'D	CHANGES	M/C No 318-89	SHEETS 150

FMA

EY01529

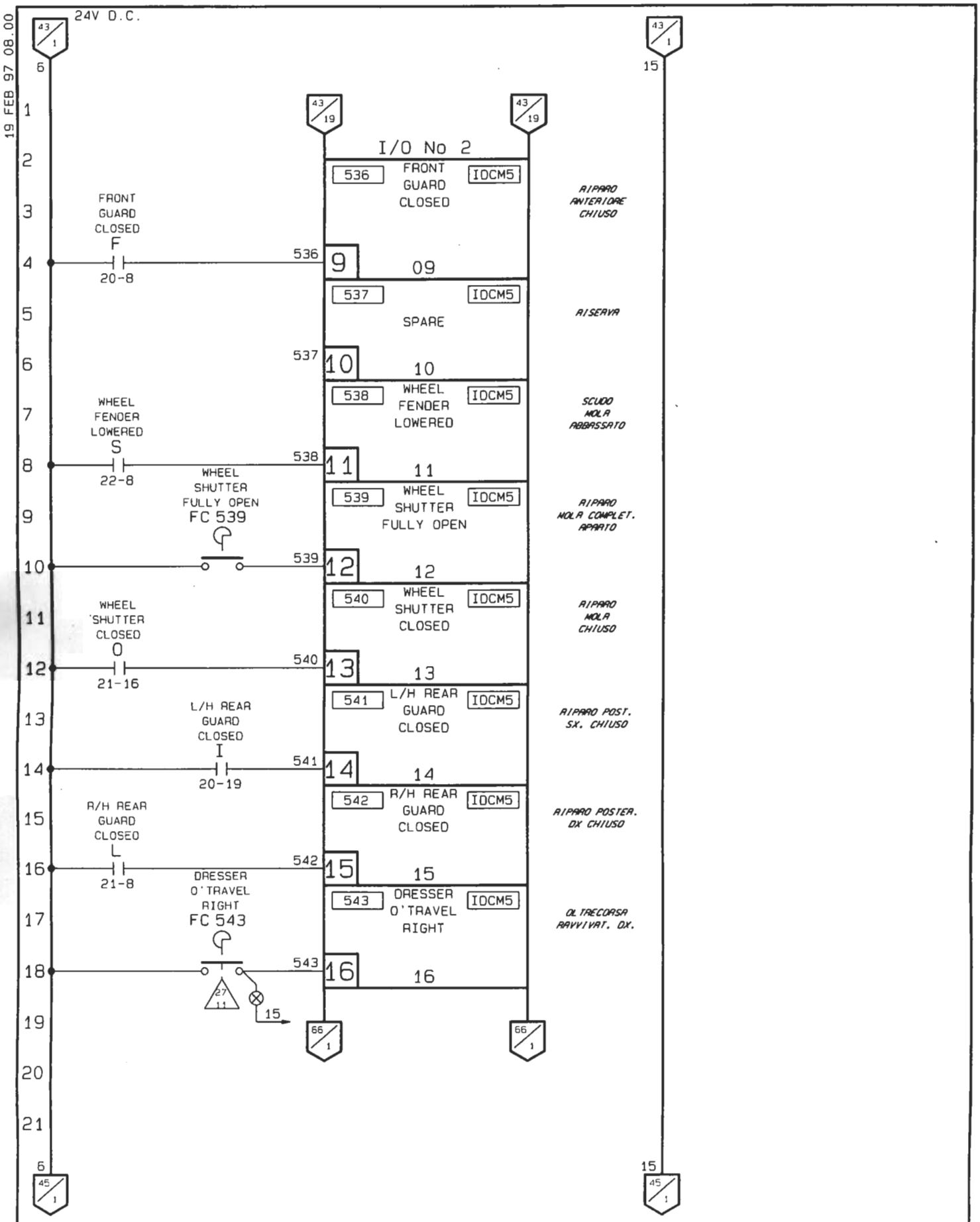

DRAWN RDP					TITLE: P.C. INPUTS. / *P.C. INGRESSI*
CHECKED					
APPROVED					
LAYOUT APP'D					M/C No 318-89

CHANGES	NAME	DATE	C.I.
	YE	17-02-97	W/O 96968
	XE	17-02-97	W/O 97833
	XE	17-02-97	W/O 97287
	XE	17-02-97	W/O 97562
	YE	17-02-97	W/O 97848
	YE	17-02-97	W/O 96967
	YE	17-02-97	W/O 96960
	XE	17-02-97	W/O 97032

FMA

EY01529

MICROFILM

REF.DRG –

SHEET 44

SHEETS 150

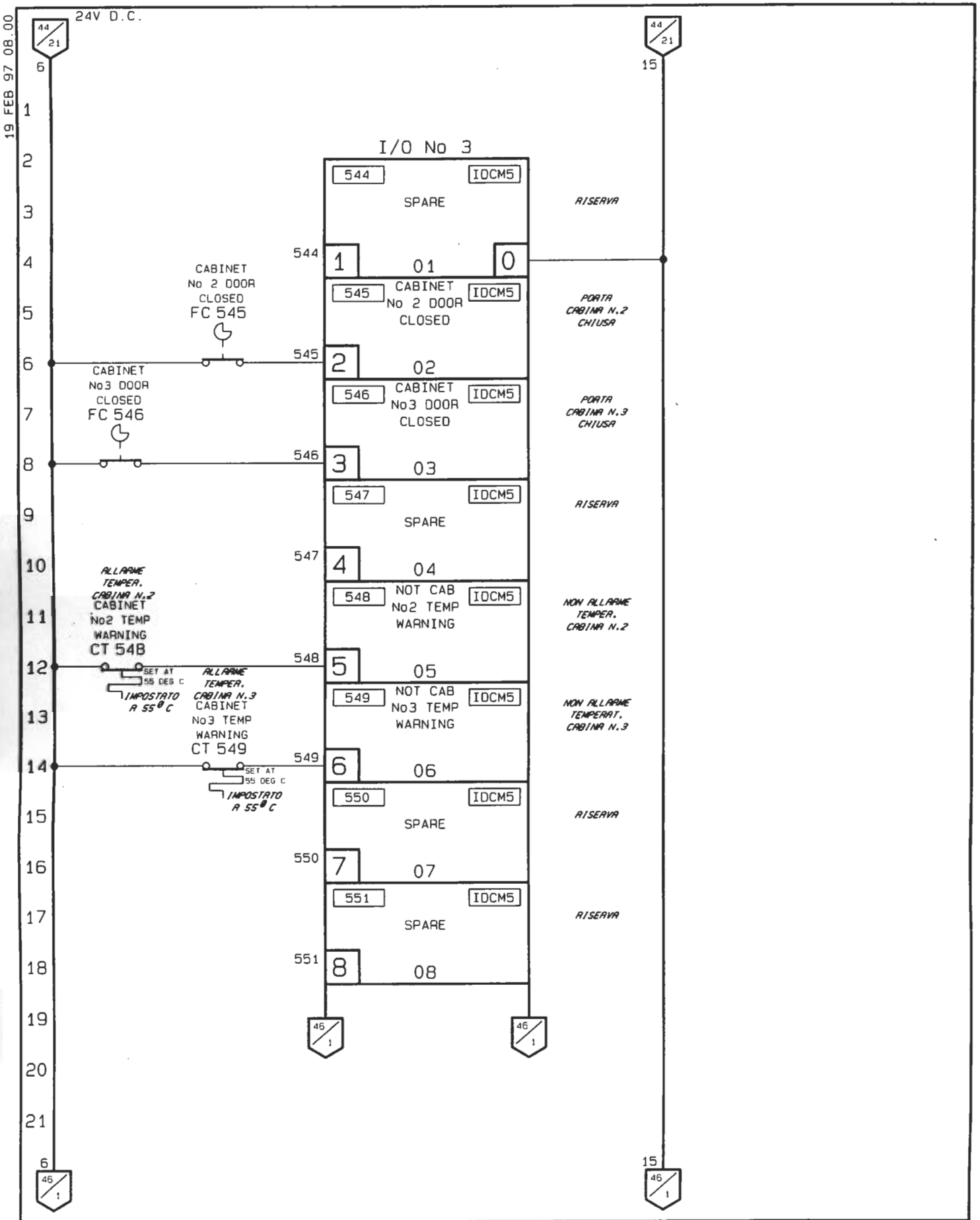
19 FEB 97 08.00
24V D.C.
44/21
I/O No 3
544 IDCM5 SPARE RISERVA
544 1 01 0
545 CABINET No 2 DOOR CLOSED IDCM5 PORTA CABINA N.2 CHIUSA
545 2 02
546 CABINET No3 DOOR CLOSED IDCM5 PORTA CABINA N.3 CHIUSA
546 3 03
547 IDCM5 SPARE RISERVA
547 4 04
548 NOT CAB No2 TEMP WARNING IDCM5 NON ALLARME TEMPER. CABINA N.2
548 5 05
549 NOT CAB No3 TEMP WARNING IDCM5 NON ALLARME TEMPERAT. CABINA N.3
549 6 06
550 IDCM5 SPARE RISERVA
550 7 07
551 IDCM5 SPARE RISERVA
551 8 08
CABINET No 2 DOOR CLOSED FC 545
CABINET No3 DOOR CLOSED FC 546
ALLARME TEMPER. CABINA N.2 CABINET No2 TEMP WARNING CT 548B
SET AT 55 DEG C
IMPOSTATO A 55° C
ALLARME TEMPER. CABINA N.3 CABINET No3 TEMP WARNING CT 549
SET AT 55 DEG C
IMPOSTATO A 55° C
46/1

| | | |

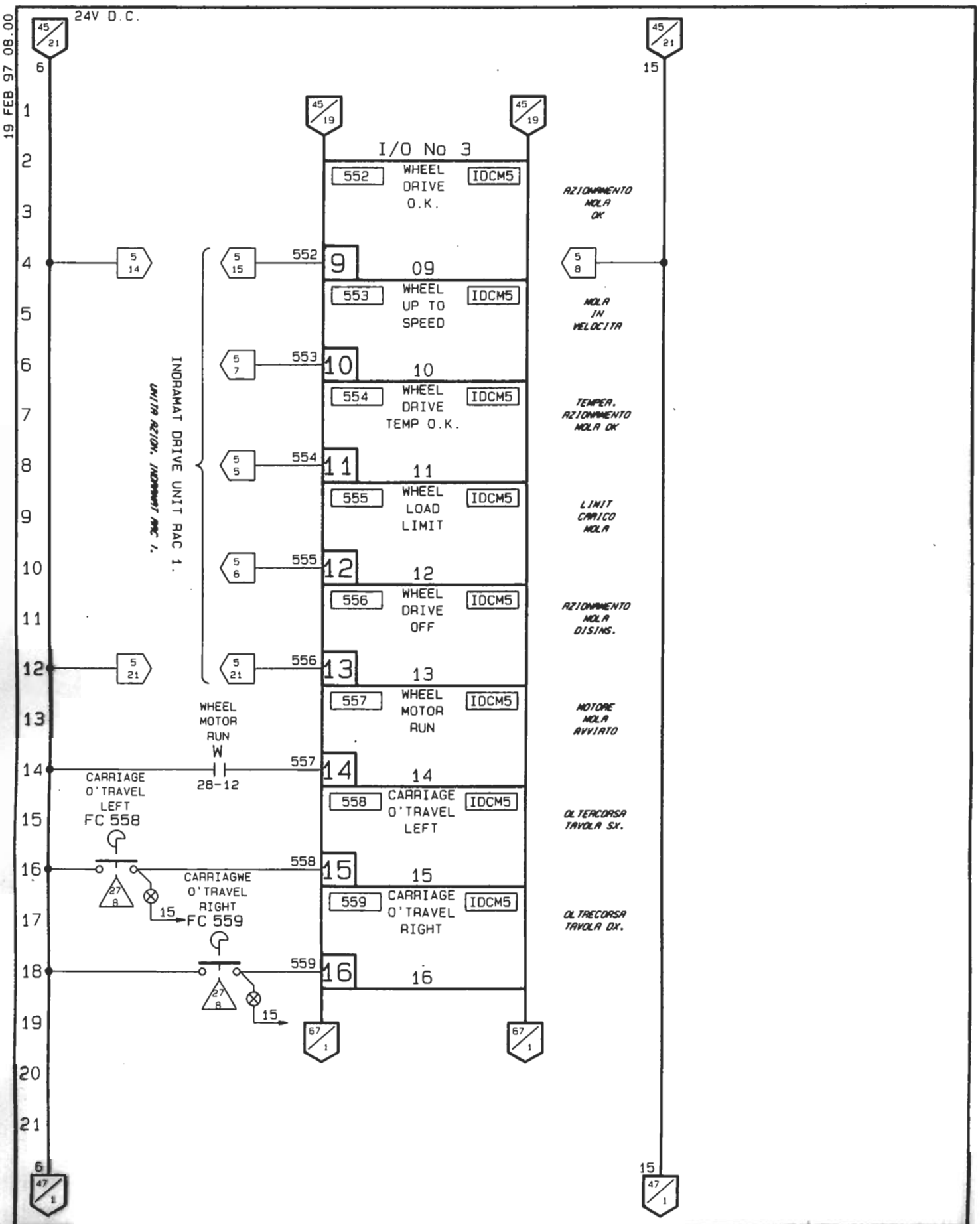

DRAWN RDP					
CHECKED					
APPROVED					
LAYOUT APP'D					
CHANGES	NAME	DATE	C.I.		
	KE	17-02-97	M/O 9568		
	KE	17-02-97	M/O 9783		
	KE	17-02-97	M/O 9787		
	KE	17-02-97	M/O 9782		
	KE	17-02-97	M/O 9784		
	KE	17-02-97	M/O 9667		
	KE	17-02-97	M/O 9569		
	KE	17-02-97	M/O 9703		

TITLE

P.C. INPUTS.

P.C. INGRESSI

M/C No 318-89

FMA

EY01529

MICROFILM

REF.DRG -

SHEET 46

SHEETS 150

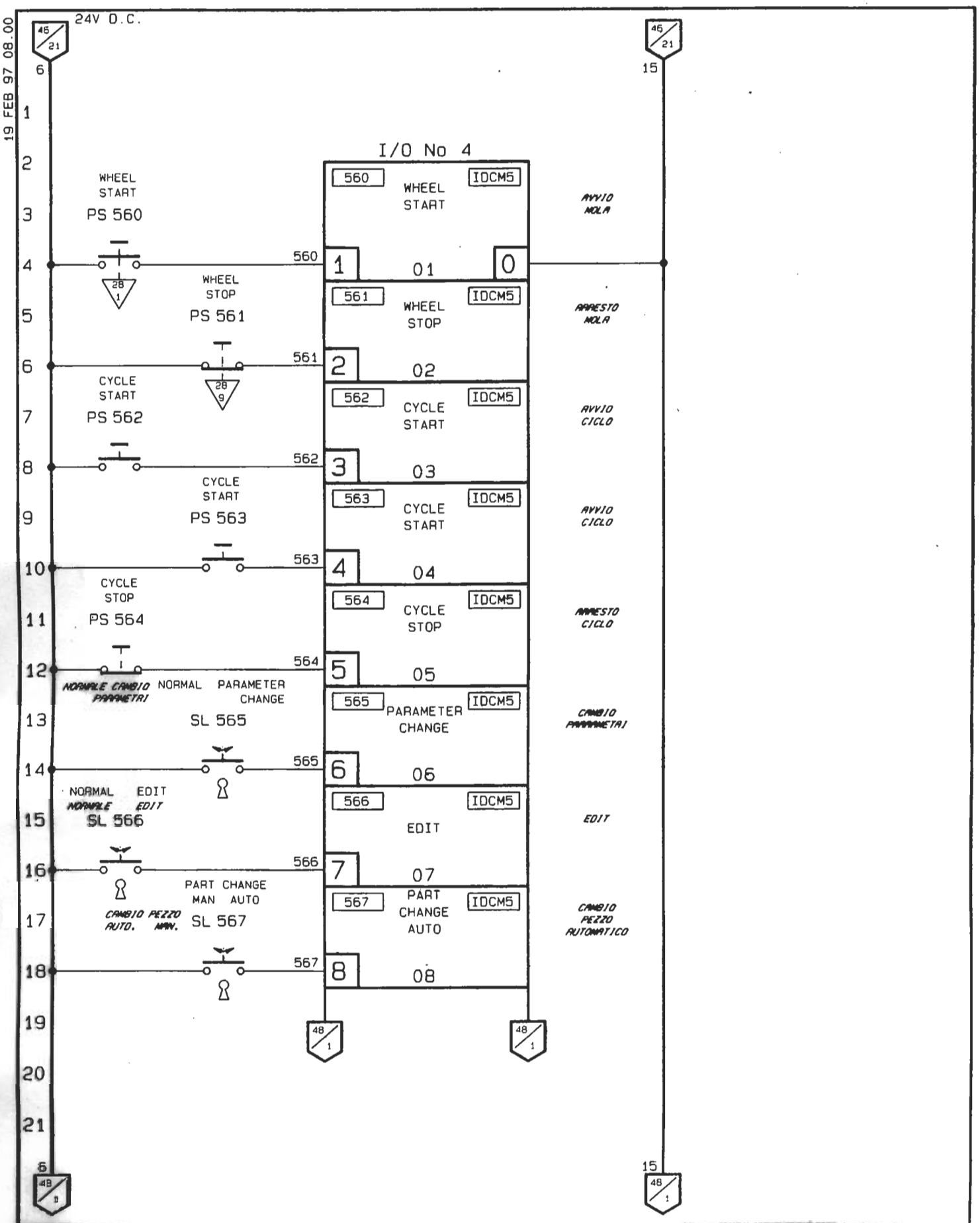

DRAWN RDP					KE	KE	KE	KE	KE	KE	KE	KE	KE	NAME	CHANGES	TITLE		MICROFILM
CHECKED					17-02-97	17-02-97	17-02-97	17-02-97	17-02-97	17-02-97	17-02-97	17-02-97	17-02-97	DATE		P.C. INPUTS.	FMA	REF DRG –
APPROVED					W/O 95888	W/O 97833	W/O 97287	W/O 97652	W/O 97645	W/O 95607	W/O 95950	W/O 97032		C.I.		*P.C. INGRESSI*	EY01529	SHEET 47
LAYOUT APP'D																M/C No 318-89		SHEETS 150

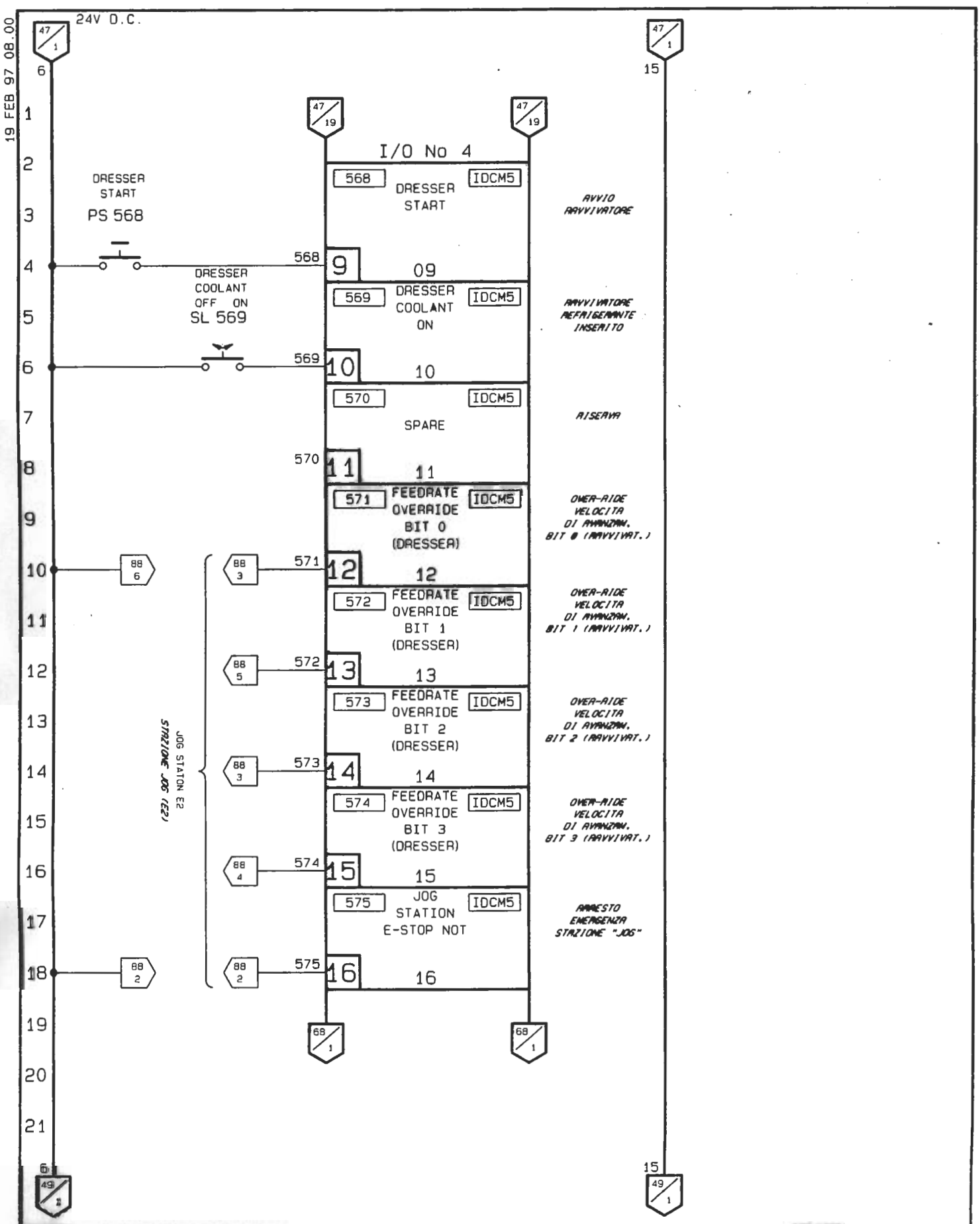
19 FEB 97 08.00
24V D.C.
I/O No 4
DRESSER START
PS 568
568
DRESSER COOLANT OFF ON
SL 569
569
570
571
572
573
574
575
IDCM5
DRESSER START
09
DRESSER COOLANT ON
10
SPARE
11
FEEDRATE OVERRIDE BIT 0 (DRESSER)
12
FEEDRATE OVERRIDE BIT 1 (DRESSER)
13
FEEDRATE OVERRIDE BIT 2 (DRESSER)
14
FEEDRATE OVERRIDE BIT 3 (DRESSER)
15
JOG STATION E-STOP NOT
16
AVVIO RAVVIVATORE
RAVVIVATORE REFRIGERANTE INSERITO
RISERVA
OVER-RIDE VELOCITA DI AVANZAM. BIT 0 (RAVVIVAT.)
OVER-RIDE VELOCITA DI AVANZAM. BIT 1 (RAVVIVAT.)
OVER-RIDE VELOCITA DI AVANZAM. BIT 2 (RAVVIVAT.)
OVER-RIDE VELOCITA DI AVANZAM. BIT 3 (RAVVIVAT.)
ARRESTO EMERGENZA STAZIONE "JOG"
JOG STATION E2
STAZIONE JOG (E2)
DRAWN RDP
CHECKED
APPROVED
LAYOUT APP'D
NAME
DATE
C.I.
CHANGES
TITLE
P.C. INPUTS.
P.C. INGRESSI
M/C No 318-89
FMA
EY01529
MICROFILM
REF.DRG
SHEET 48
SHEETS 150

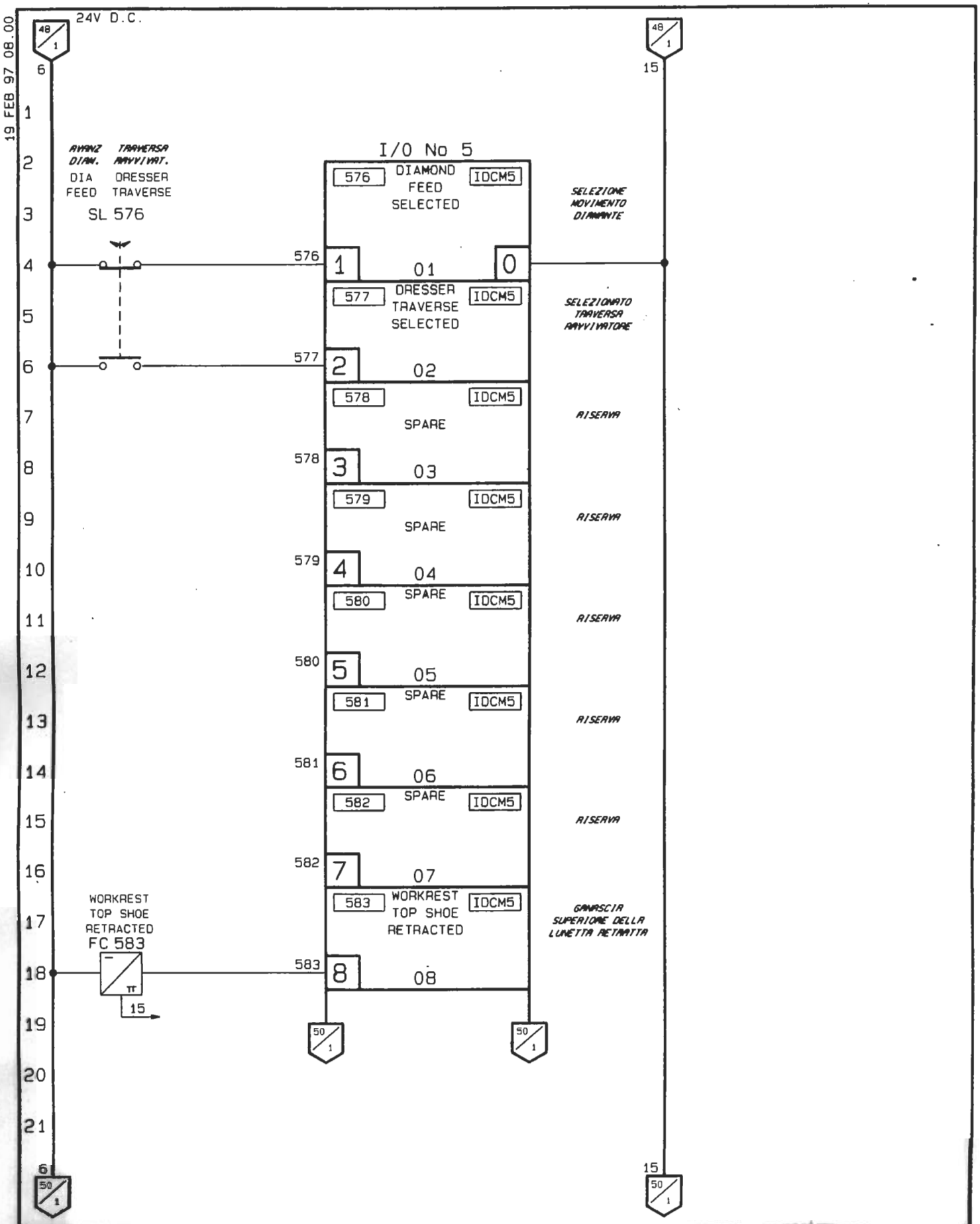
19 FEB 97 08.00
24V D.C.
48/1
6
15
AVANZ DIAM. DIA FEED
TRAVERSA RAVVIVAT. DRESSER TRAVERSE
SL 576
I/O No 5
576 DIAMOND FEED SELECTED IDCM5
SELEZIONE MOVIMENTO DIAMANTE
576 1 01 0
577 DRESSER TRAVERSE SELECTED IDCM5
SELEZIONATO TRAVERSA RAVVIVATORE
577 2 02
578 SPARE IDCM5
RISERVA
578 3 03
579 SPARE IDCM5
RISERVA
579 4 04
580 SPARE IDCM5
RISERVA
580 5 05
581 SPARE IDCM5
RISERVA
581 6 06
582 SPARE IDCM5
RISERVA
582 7 07
583 WORKREST TOP SHOE RETRACTED IDCM5
GANASCIA SUPERIORE DELLA LUNETTA RETRATTA
583 8 08
WORKREST TOP SHOE RETRACTED
FC 583
15
50/1

| | | |

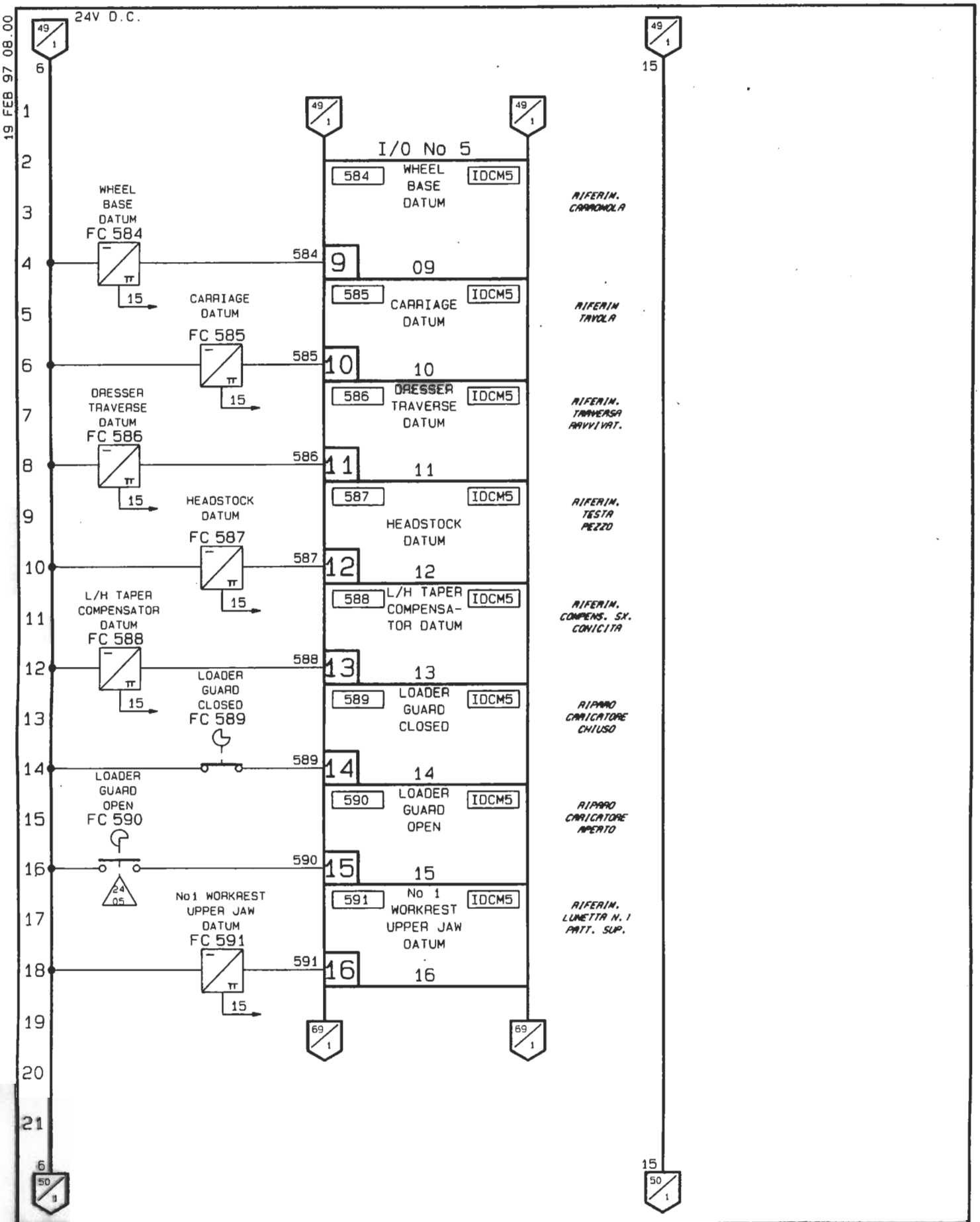
24V D.C.
I/O No 5
WHEEL BASE DATUM FC 584
584
9
09
584
WHEEL BASE DATUM
IDCM5
RIFERIM. CARROMOLA
CARRIAGE DATUM FC 585
585
10
10
585
CARRIAGE DATUM
IDCM5
RIFERIM TAVOLA
DRESSER TRAVERSE DATUM FC 586
586
11
11
586
DRESSER TRAVERSE DATUM
IDCM5
RIFERIM. TRAVERSA RAVVIVAT.
HEADSTOCK DATUM FC 587
587
12
12
587
HEADSTOCK DATUM
IDCM5
RIFERIM. TESTA PEZZO
L/H TAPER COMPENSATOR DATUM FC 588
588
13
13
588
L/H TAPER COMPENSA-TOR DATUM
IDCM5
RIFERIM. COMPENS. SX. CONICITA
LOADER GUARD CLOSED FC 589
589
14
14
589
LOADER GUARD CLOSED
IDCM5
RIPARO CARICATORE CHIUSO
LOADER GUARD OPEN FC 590
590
15
15
590
LOADER GUARD OPEN
IDCM5
RIPARO CARICATORE APERTO
No1 WORKREST UPPER JAW DATUM FC 591
591
16
16
591
No 1 WORKREST UPPER JAW DATUM
IDCM5
RIFERIM. LUNETTA N. 1 PATT. SUP.
24 05
15
49/1
69/1
50/1
19 FEB 97 08.00

| | | |

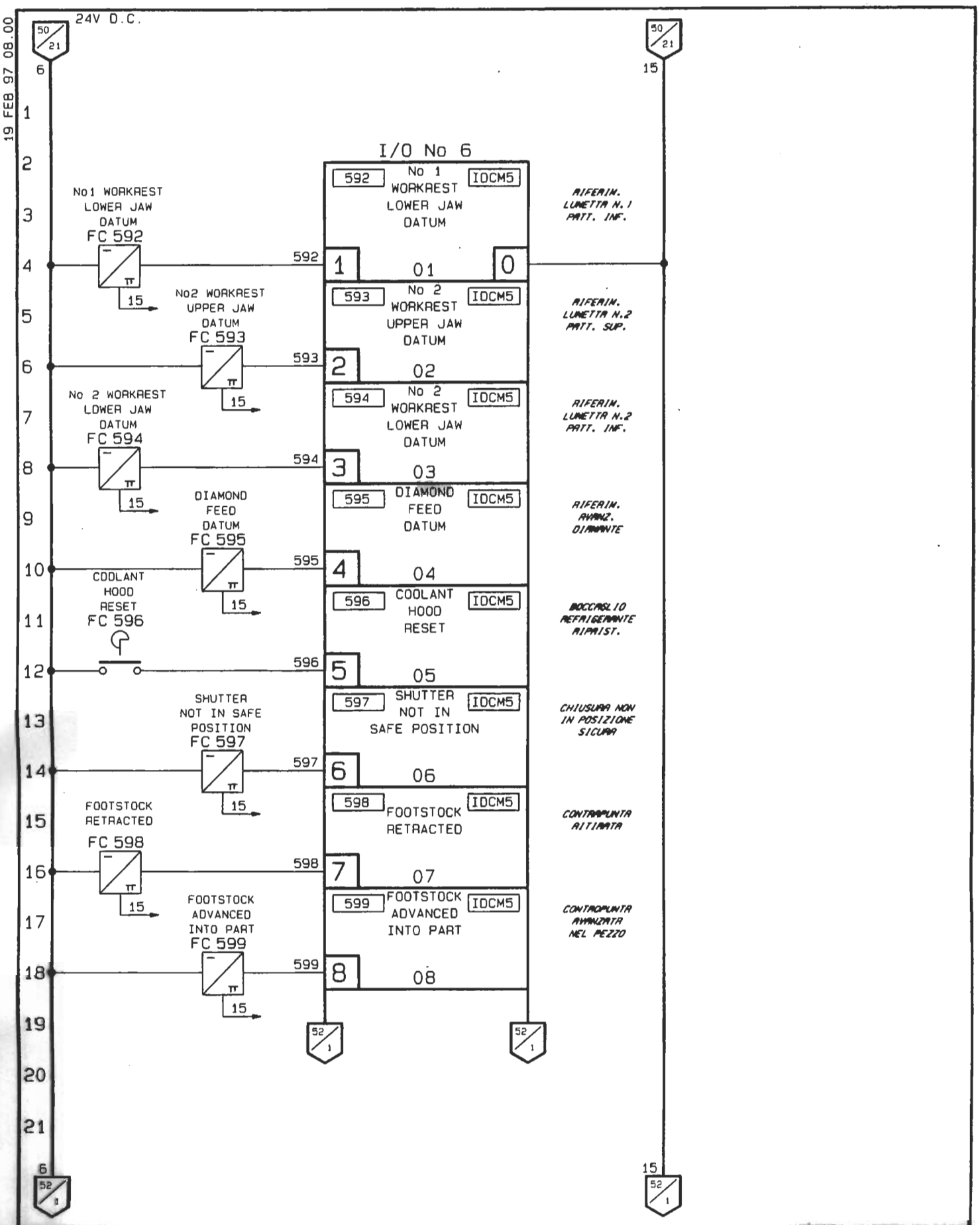
19 FEB 97 08.00
24V D.C.
50/21
I/O No 6
No1 WORKREST LOWER JAW DATUM FC 592
592
No 1 WORKREST LOWER JAW DATUM
IDCM5
RIFERIM. LUNETTA N.1 PATT. INF.
No2 WORKREST UPPER JAW DATUM FC 593
593
No 2 WORKREST UPPER JAW DATUM
RIFERIM. LUNETTA N.2 PATT. SUP.
No 2 WORKREST LOWER JAW DATUM FC 594
594
No 2 WORKREST LOWER JAW DATUM
RIFERIM. LUNETTA N.2 PATT. INF.
DIAMOND FEED DATUM FC 595
595
DIAMOND FEED DATUM
RIFERIM. AVANZ. DIAMANTE
COOLANT HOOD RESET FC 596
596
COOLANT HOOD RESET
BOCCASLIO REFRIGERANTE RIPRIST.
SHUTTER NOT IN SAFE POSITION FC 597
597
SHUTTER NOT IN SAFE POSITION
CHIUSURA NON IN POSIZIONE SICURA
FOOTSTOCK RETRACTED FC 598
598
FOOTSTOCK RETRACTED
CONTROPUNTA RITIRATA
FOOTSTOCK ADVANCED INTO PART FC 599
599
FOOTSTOCK ADVANCED INTO PART
CONTROPUNTA AVANZATA NEL PEZZO
01
02
03
04
05
06
07
08
52/1

| | | |

19 FEB 97 08.00

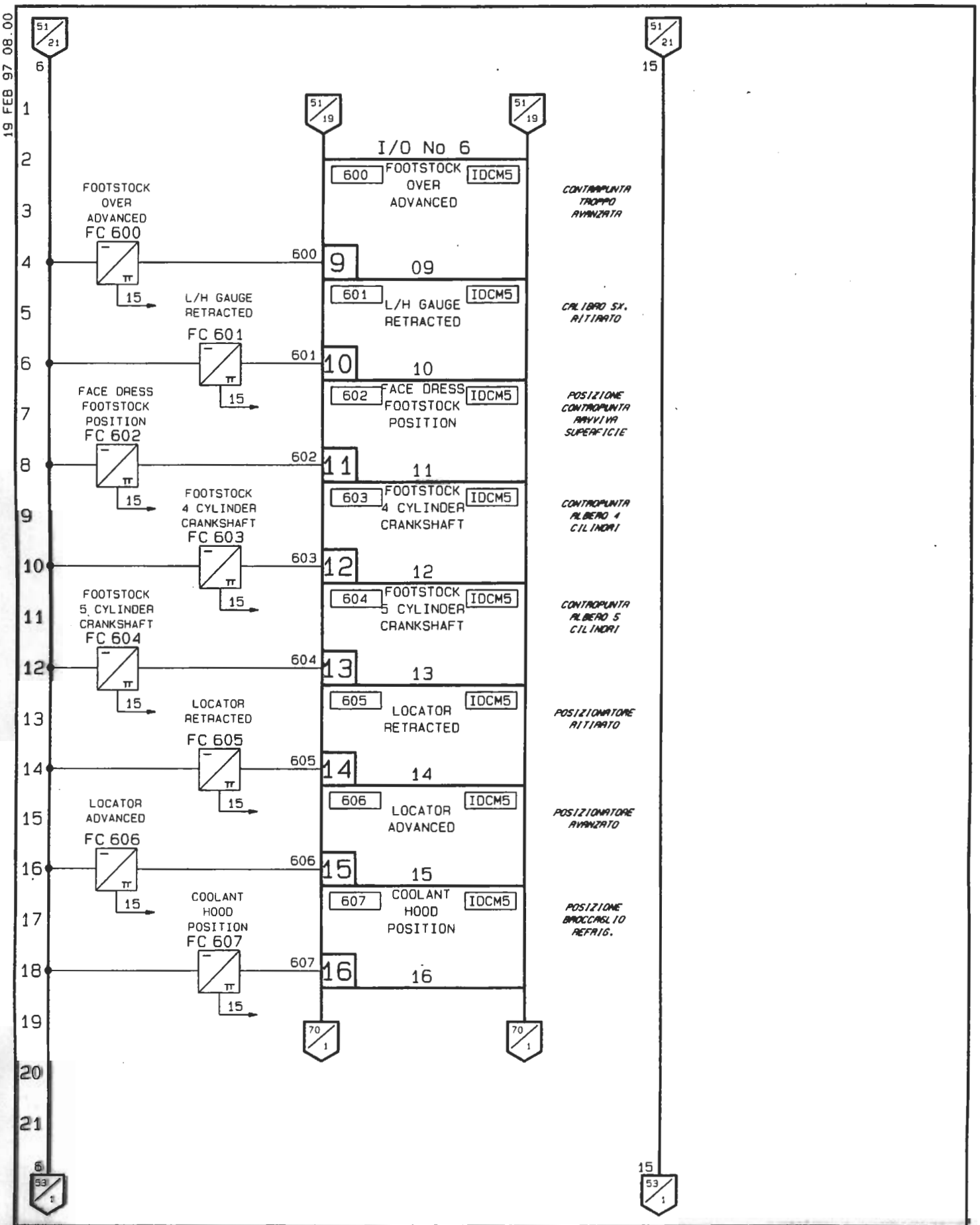

DRAWN: RDP						XE	XE	XE	XE	XE	XE	XE	XE	XE	NAME	CHANGES	TITLE
CHECKED:						17-02-97	17-02-97	17-02-97	17-02-97	17-02-97	17-02-97	17-02-97	17-02-97	17-02-97	DATE		P.C. INPUTS.
APPROVED:						W/O 98869	W/O 97834	W/O 97887	W/O 97662	W/O 97545	W/O 96507	W/O 96950	W/O 97032		C.I.		*P.C. INGRESSI*
LAYOUT APP'D:																	M/C No 318-89

FMA

EY01529

MICROFILM

REF.DRG -

SHEET 52

SHEETS 150

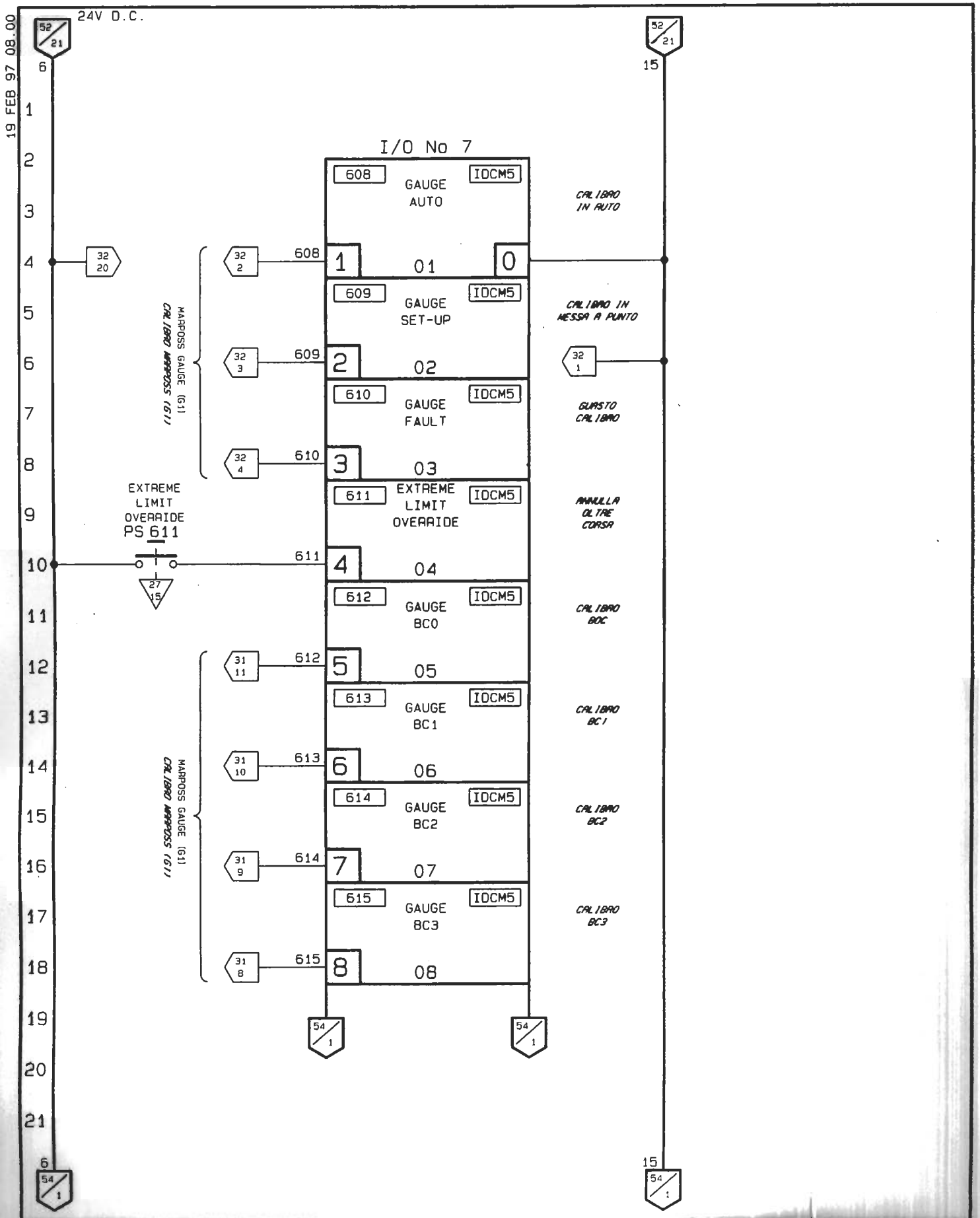
19 FEB 97 08.00
24V D.C.
52/21
I/O No 7
608
GAUGE AUTO
IDCM5
CALIBRO IN AUTO
609
GAUGE SET-UP
CALIBRO IN MESSA A PUNTO
610
GAUGE FAULT
GUASTO CALIBRO
611
EXTREME LIMIT OVERRIDE
ANNULLA OLTRE CORSA
612
GAUGE BC0
CALIBRO BOC
613
GAUGE BC1
CALIBRO BC1
614
GAUGE BC2
CALIBRO BC2
615
GAUGE BC3
CALIBRO BC3
01
02
03
04
05
06
07
08
MARPOSS GAUGE (G1)
CAL 1990 MARPOSS (G1)
EXTREME LIMIT OVERRIDE
PS 611
27/15
54/1

| | | |

19 FEB 97 08.00

24V D.C.

53/21 — 6 — 1 — 2 — 3 — 4 — 5 — 6 — 7 — 8 — 9 — 10 — 11 — 12 — 13 — 14 — 15 — 16 — 17 — 18 — 19 — 20 — 21 — 6 — 55/1

53/21 — 15 — 55/1

53/19 — 53/19

I/O No 7

616	GAUGE AC0	IDCM5	CALIBRO AC0		
616	9	09		32/12	31/2
617	GAUGE AC1	IDCM5	CALIBRO AC1		
617	10	10		32/11	
618	GAUGE AC2	IDCM5	CALIBRO AC2		
618	11	11		32/10	
619	GAUGE AC3	IDCM5	CALIBRO AC3		
619	12	12		32/9	
620	GAUGE TC1+	IDCM5	CALIBRO TC1+		
620	13	13		31/3	
621	GAUGE TC2+	IDCM5	CALIBRO TC2+		
621	14	14		31/4	
622	GAUGE TC1-	IDCM5	CALIBRO TC1-		
622	15	15		31/5	
623	GAUGE TC2-	IDCM5	CALIBRO TC2-		
623	16	16		31/6	

31/2

MARPOSS GAUGE (G1)

CALIBRO MARPOSS (G1)

71/1 — 71/1

DRAWN	RDP	NAME	DATE	C.I.	CHANGES
CHECKED		KE	17-02-97	W/O 95958	
APPROVED		KE	17-02-97	W/O 97835	
LAYOUT APP'D		KE	17-02-97	W/O 97287	
		KE	17-02-97	W/O 97662	
		KE	17-02-97	W/O 97646	
		KE	17-02-97	W/O 96507	
		KE	17-02-97	W/O 96550	
		KE	17-02-97	W/O 97032	

TITLE

P.C. INPUTS.

P.C. INGRESSI

M/C No 318-89

FMA

EY01529

MICROFILM

REF. DRG -

SHEET 54

SHEETS 150

19 FEB 97 08.00

24V D.C.

54/21

I/O No 8

624	GAUGE BCD 1	IDCM5	CALIBRO BCD 1	
625	GAUGE BCD 2	IDCM5	CALIBRO BCD 2	
626	GAUGE BCD 4	IDCM5	CALIBRO BCD 4	
627	GAUGE BCD 8	IDCM5	CALIBRO BCD 8	
628	GAUGE BCD 10	IDCM5	CALIBRO BCD 10	
629	GAUGE BCD 20	IDCM5	CALIBRO BCD 20	
630	GAUGE BCD 40	IDCM5	CALIBRO BCD 40	
631	GAUGE BCD 80	IDCM5	CALIBRO BCD 80	

33/15	624	1	01
33/6	625	2	02
33/16	626	3	03
33/7	627	4	04
33/17	628	5	05
33/8	629	6	06
33/18	630	7	07
33/9	631	8	08

0

MARPOSS GAUGE (G1)

CALIBRO MARPOSS (G1)

56/1

DRAWN	RDP	NAME	DATE	C.I.
CHECKED		KE	17-02-97	M/O 96898
APPROVED		KE	17-02-97	M/O 97633
LAYOUT APP'D		KE	17-02-97	M/O 97287
		KE	17-02-97	M/O 97562
		KE	17-02-97	M/O 97545
		KE	17-02-97	M/O 96607
		KE	17-02-97	M/O 96560
		KE	17-02-97	M/O 97032

CHANGES

TITLE

P.C. INPUTS.

P.C. INGRESSI

M/C No 318-89

FMA

EY01529

MICROFILM

REF.DRG -

SHEET 55

SHEETS 150

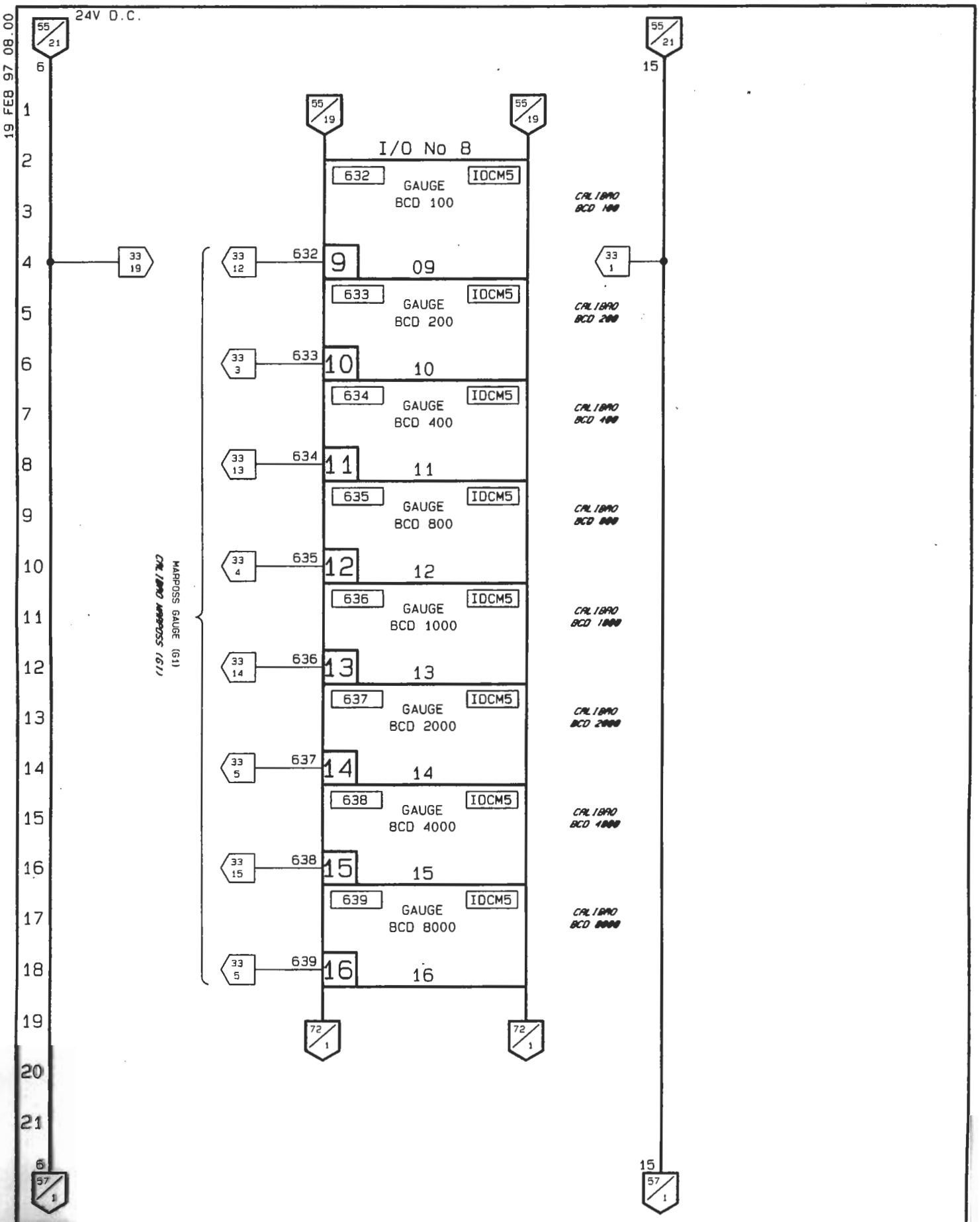
19 FEB 97 08.00
24V D.C.
55/21
55/19
I/O No 8
632
IDCM5
GAUGE
BCD 100
CALIBRO
BCD 100
33/19
33/12
632
9
09
33/1
633
GAUGE
BCD 200
CALIBRO
BCD 200
33/3
633
10
10
634
GAUGE
BCD 400
CALIBRO
BCD 400
33/13
634
11
11
635
GAUGE
BCD 800
CALIBRO
BCD 800
33/4
635
12
12
636
GAUGE
BCD 1000
CALIBRO
BCD 1000
33/14
636
13
13
637
GAUGE
BCD 2000
CALIBRO
BCD 2000
33/5
637
14
14
638
GAUGE
BCD 4000
CALIBRO
BCD 4000
33/15
638
15
15
639
GAUGE
BCD 8000
CALIBRO
BCD 8000
33/5
639
16
16
MARPOSS GAUGE (G1)
CAL/IMO MARPOSS (G1)
72/1
57/1

| | | |

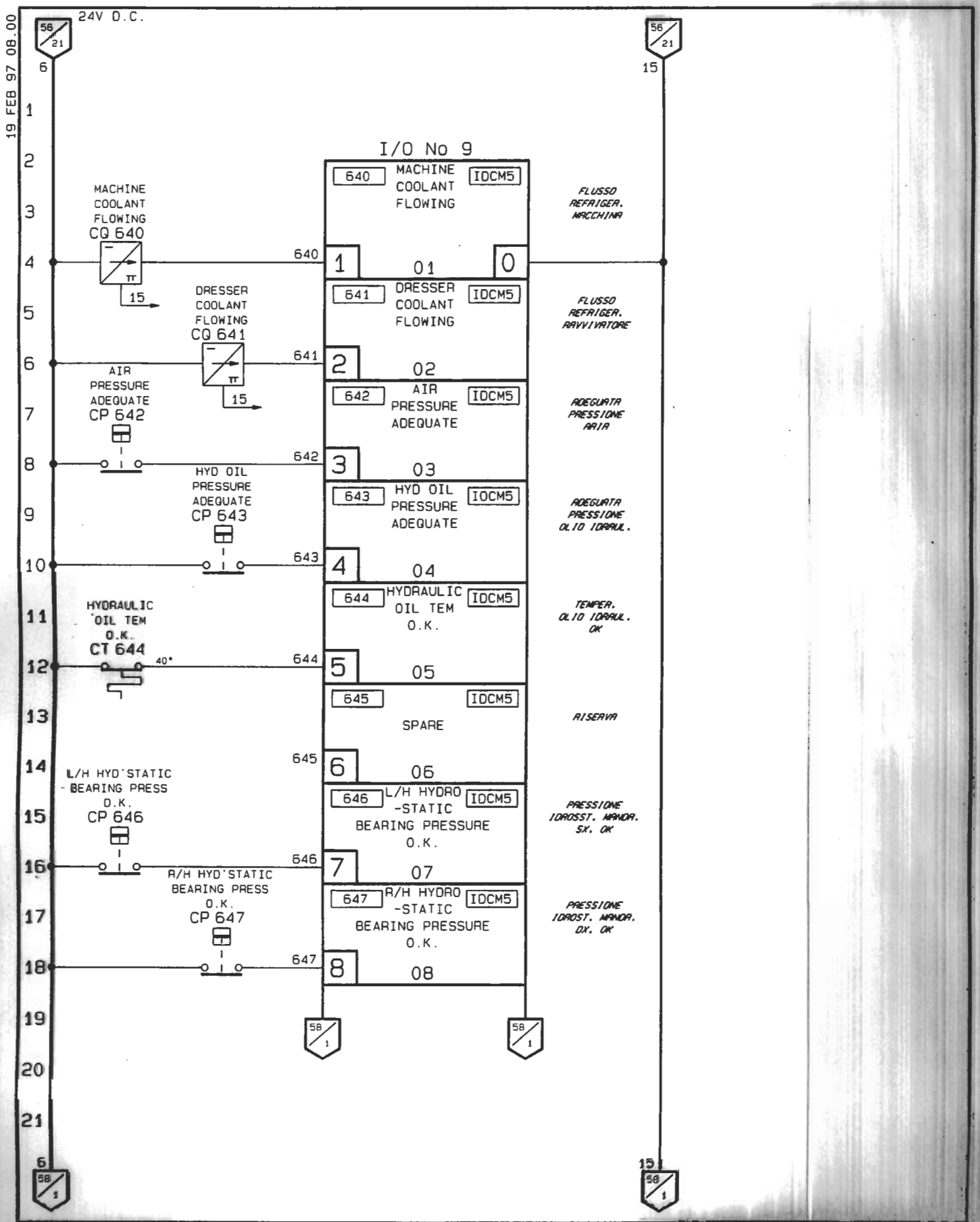
19 FEB 97 08.00
24V D.C.
56/21
I/O No 9
MACHINE COOLANT FLOWING
CQ 640
640
1
01
0
640 MACHINE COOLANT FLOWING IDCM5
FLUSSO REFRIGER. MACCHINA
DRESSER COOLANT FLOWING
CQ 641
641
2
02
641 DRESSER COOLANT FLOWING IDCM5
FLUSSO REFRIGER. RAVVIVATORE
AIR PRESSURE ADEQUATE
CP 642
642
3
03
642 AIR PRESSURE ADEQUATE IDCM5
ADEGUATA PRESSIONE ARIA
HYD OIL PRESSURE ADEQUATE
CP 643
643
4
04
643 HYD OIL PRESSURE ADEQUATE IDCM5
ADEGUATA PRESSIONE OLIO IDRAUL.
HYDRAULIC OIL TEM O.K.
CT 644
40°
644
5
05
644 HYDRAULIC OIL TEM O.K. IDCM5
TEMPER. OLIO IDRAUL. OK
645
6
06
645 SPARE IDCM5
RISERVA
L/H HYD'STATIC BEARING PRESS O.K.
CP 646
646
7
07
646 L/H HYDRO -STATIC BEARING PRESSURE O.K. IDCM5
PRESSIONE IDROST. MANOR. SX. OK
R/H HYD'STATIC BEARING PRESS O.K.
CP 647
647
8
08
647 R/H HYDRO -STATIC BEARING PRESSURE O.K. IDCM5
PRESSIONE IDROST. MANOR. DX. OK
58/1

| | | |

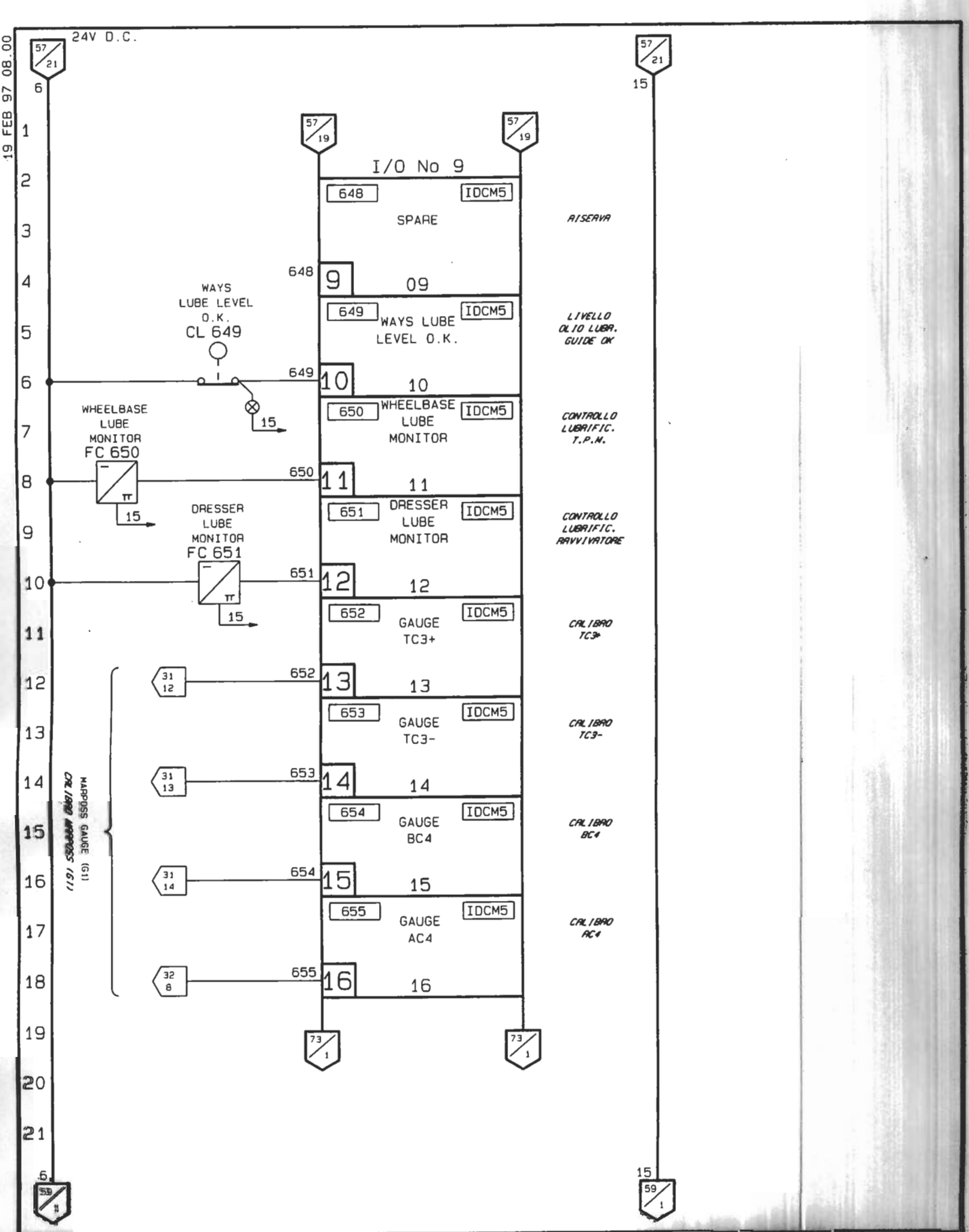
19 FEB 97 08.00
24V D.C.
57/21
57/19
I/O No 9
648
IDCM5
SPARE
RISERVA
9
09
649
WAYS LUBE LEVEL O.K.
LIVELLO OLIO LUBR. GUIDE OK
WAYS LUBE LEVEL O.K. CL 649
10
650
WHEELBASE LUBE MONITOR
CONTROLLO LUBRIFIC. T.P.H.
WHEELBASE LUBE MONITOR FC 650
11
651
DRESSER LUBE MONITOR
CONTROLLO LUBRIFIC. RAVVIVATORE
DRESSER LUBE MONITOR FC 651
12
652
GAUGE TC3+
CALIBRO TC3+
13
653
GAUGE TC3-
CALIBRO TC3-
14
654
GAUGE BC4
CALIBRO BC4
15
655
GAUGE AC4
CALIBRO AC4
16
MAPOSS GAUGE (61)
73/1
59/1
DRAWN RDP
CHECKED
APPROVED
LAYOUT APP'D
NAME
DATE
C.I.
CHANGES
TITLE
P.C. INPUTS.
P.C. INGRESSI
M/C No 318-89
FMA
EY01529
MICROFILM
REF. DRG.
SHEET 58
SHEETS 150

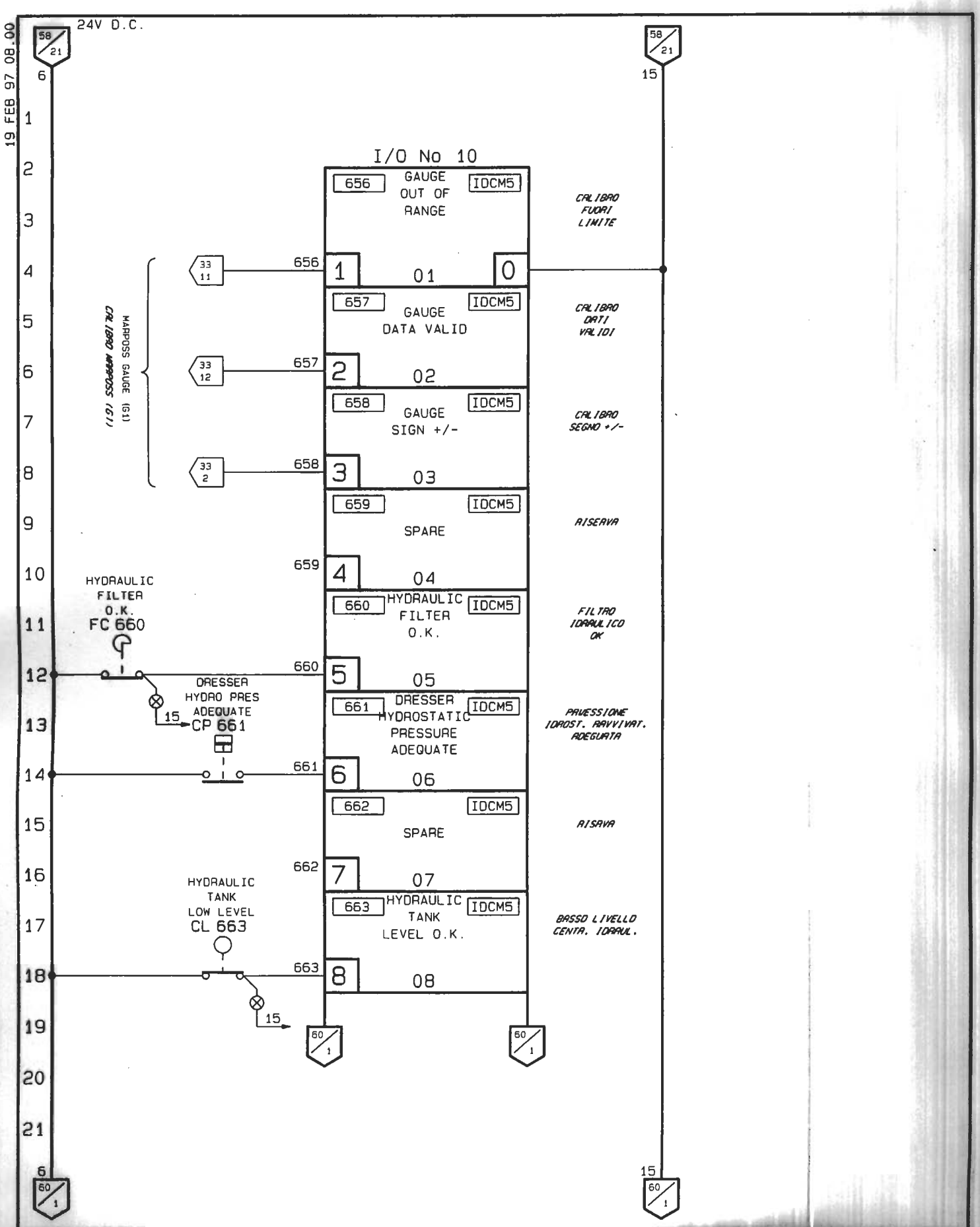

DRAWN RDP					KE	KE	KE	KE	KE	KE	KE	KE	KE	NAME	CHANGES	TITLE		MICROFILM
CHECKED					17-02-97	17-02-97	17-02-97	17-02-97	17-02-97	17-02-97	17-02-97	17-02-97	17-02-97	DATE		P.C. INPUTS.	FMA	REF.DAB –
APPROVED					M/O 96898	M/O 97833	M/O 97287	M/O 97562	M/O 97645	M/O 96607	M/O 96960	M/O 97032		C.I.		*P.C. INGRESSI*		SHEET 59
LAYOUT APP'D																M/C No 318-89	EY01529	SHEETS 150

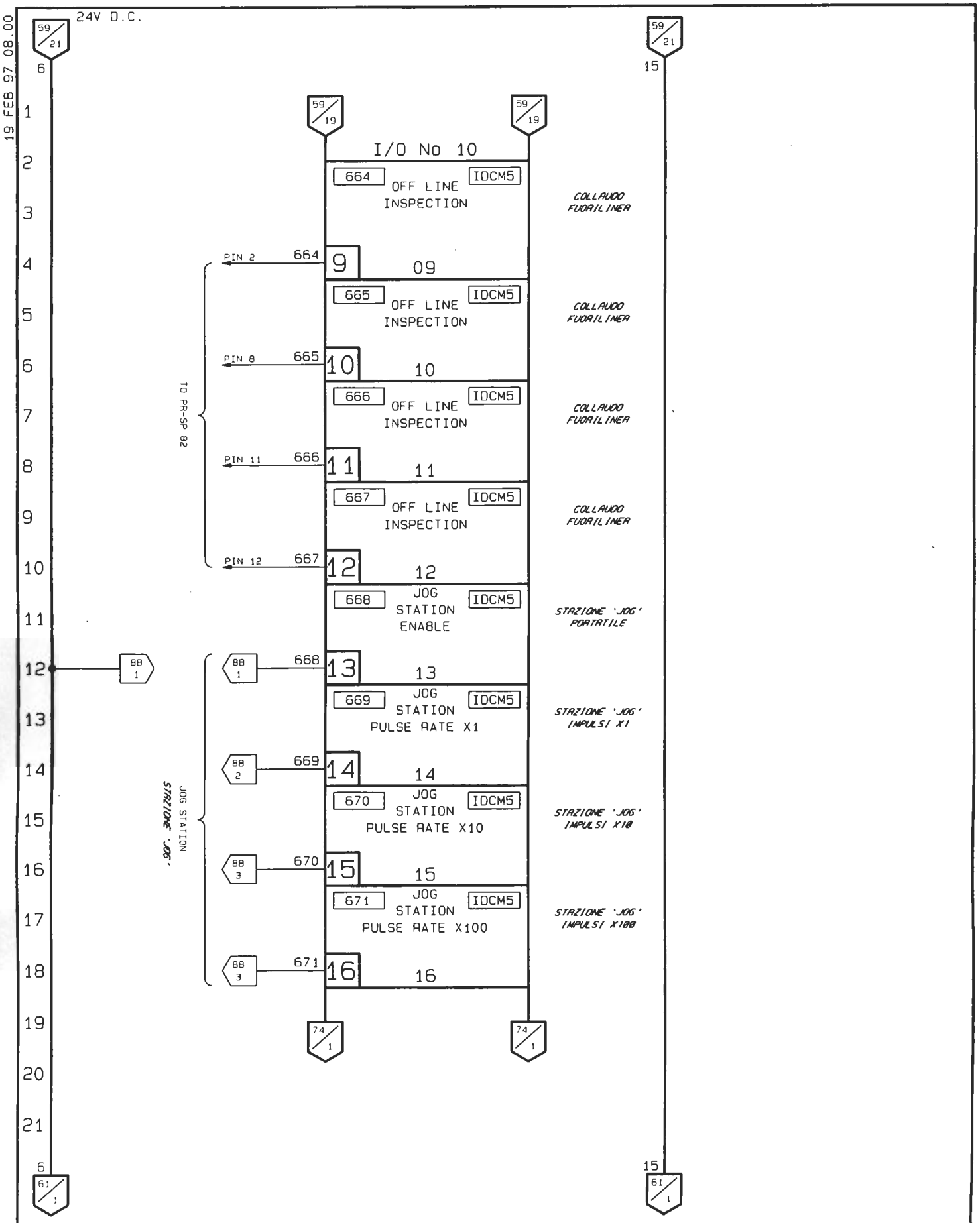
19 FEB 97 08.00
24V D.C.
59/21
59/19
I/O No 10
664
IDCM5
OFF LINE INSPECTION
COLLAUDO FUORILINEA
PIN 2
664
9
09
665
OFF LINE INSPECTION
COLLAUDO FUORILINEA
PIN 8
665
10
10
666
OFF LINE INSPECTION
COLLAUDO FUORILINEA
PIN 11
666
11
11
667
OFF LINE INSPECTION
COLLAUDO FUORILINEA
PIN 12
667
12
12
TO PR-SP 82
668
JOG STATION ENABLE
STAZIONE 'JOG' PORTATILE
88 1
668
13
13
669
JOG STATION PULSE RATE X1
STAZIONE 'JOG' IMPULSI X1
88 2
669
14
14
670
JOG STATION PULSE RATE X10
STAZIONE 'JOG' IMPULSI X10
88 3
670
15
15
671
JOG STATION PULSE RATE X100
STAZIONE 'JOG' IMPULSI X100
88 3
671
16
16
JOG STATION
STAZIONE 'JOG'
74/1
61/1
DRAWN
ROP
CHECKED
APPROVED
LAYOUT APP'D
NAME
DATE
C.I.
CHANGES
TITLE
P.C. INPUTS.
P.C. INGRESSI
M/C No 318-89
FMA
EY01529
MICROFILM
REF.DRG
-
SHEET
60
SHEETS
150

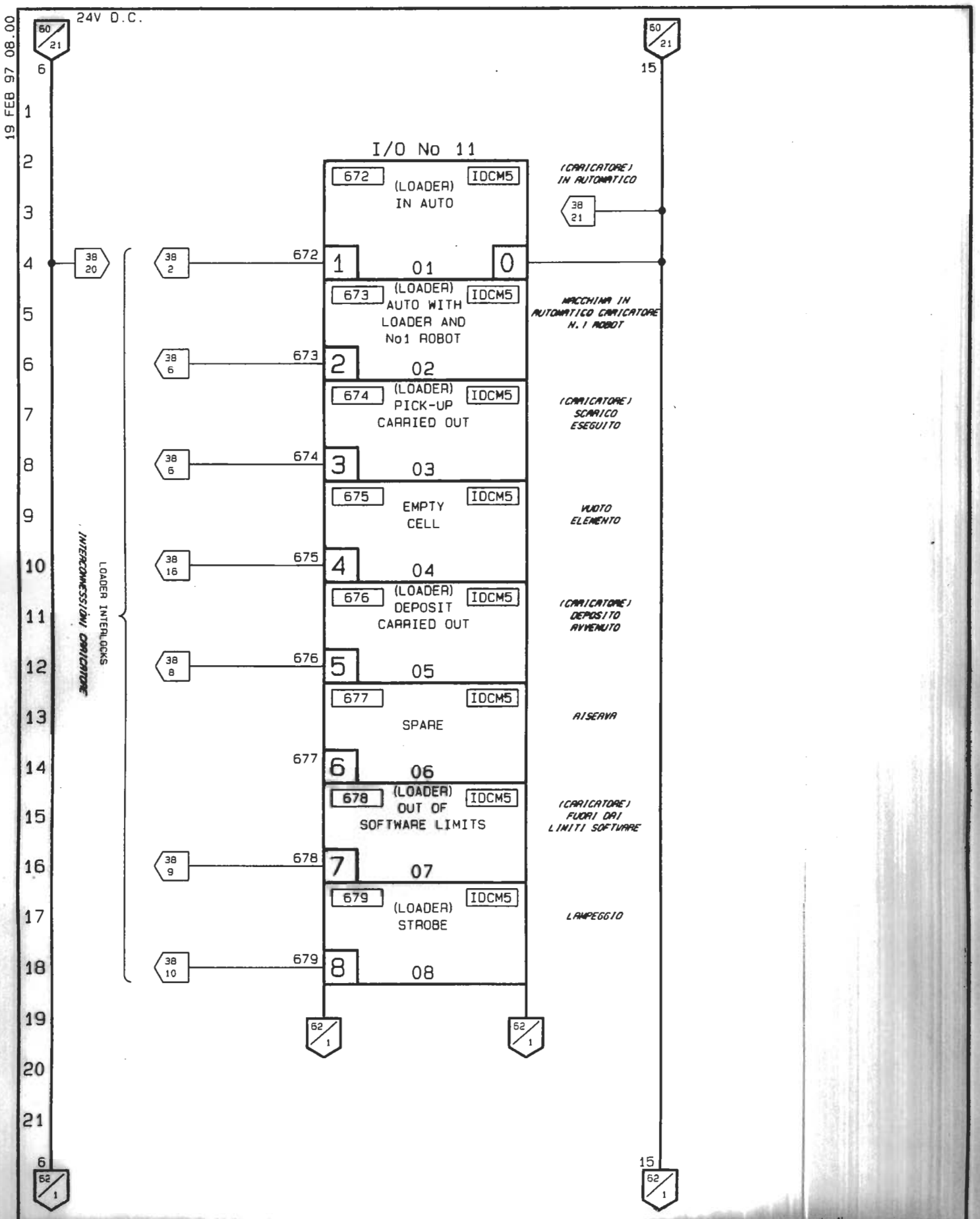
19 FEB 97 08.00
24V D.C.
60/21
I/O No 11
672 (LOADER) IN AUTO IDCM5
(CARICATORE) IN AUTOMATICO
38 21
38 20
38 2
672
1 01 0
673 (LOADER) AUTO WITH LOADER AND No1 ROBOT IDCM5
MACCHINA IN AUTOMATICO CARICATORE N.1 ROBOT
38 6
673
2 02
674 (LOADER) PICK-UP CARRIED OUT IDCM5
(CARICATORE) SCARICO ESEGUITO
38 6
674
3 03
675 EMPTY CELL IDCM5
VUOTO ELEMENTO
38 16
675
4 04
676 (LOADER) DEPOSIT CARRIED OUT IDCM5
(CARICATORE) DEPOSITO AVVENUTO
38 8
676
5 05
677 SPARE IDCM5
RISERVA
677
6 06
678 (LOADER) OUT OF SOFTWARE LIMITS IDCM5
(CARICATORE) FUORI DAI LIMITI SOFTWARE
38 9
678
7 07
679 (LOADER) STROBE IDCM5
LAMPEGGIO
38 10
679
8 08
LOADER INTERLOCKS
INTERCONNESSIONI CARICATORE
62/1
DRAWN RDP
CHECKED
APPROVED
LAYOUT APP'D
NAME DATE C.I.
CHANGES
TITLE
P.C. INPUTS.
P.C. INGRESSI
M/C No 318-89
FMA
EY01529
MICROFILM
REF.DRG
SHEET 61
SHEETS 156

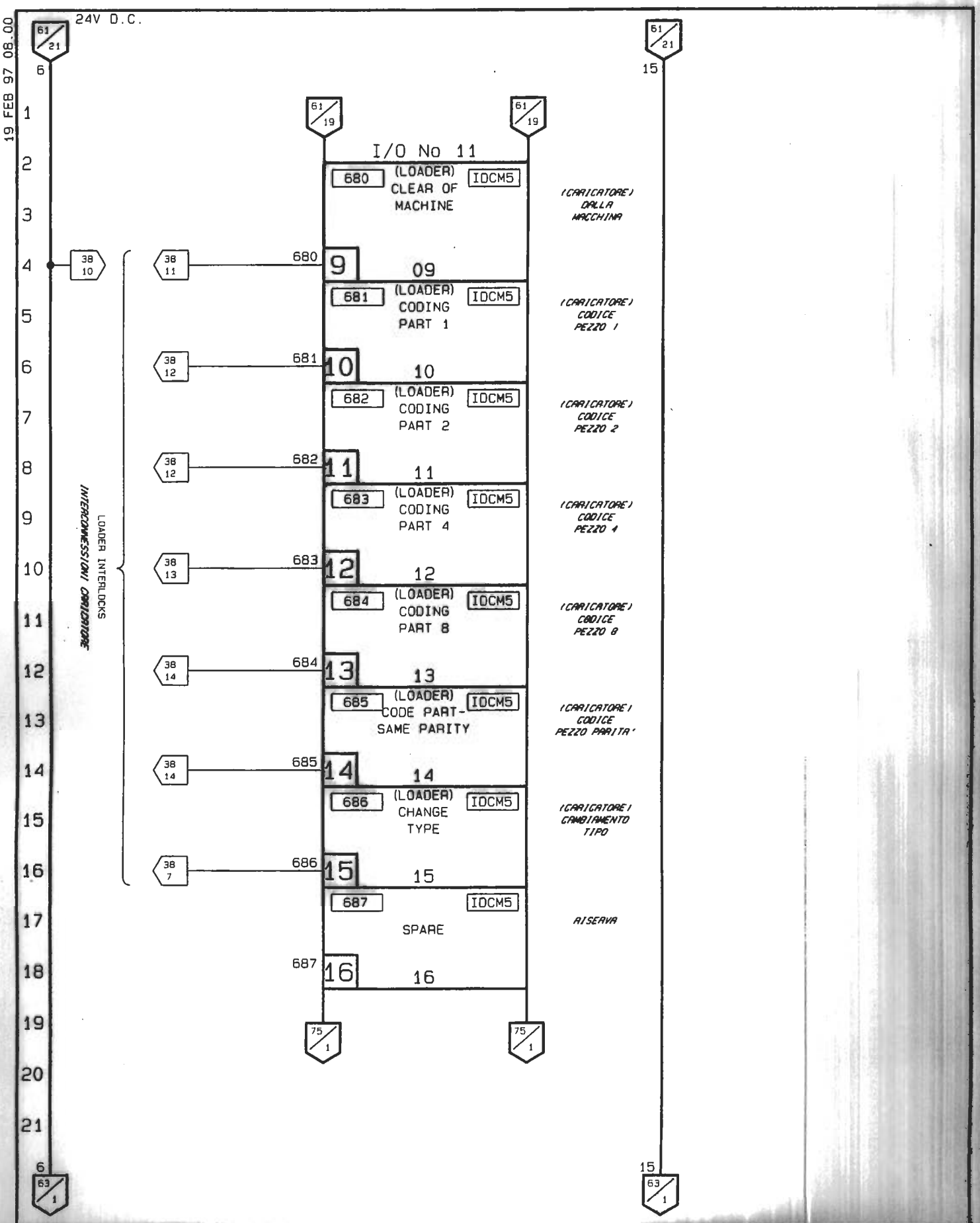

DRAWN RDP																		
CHECKED																		
APPROVED																		
LAYOUT APP'D																		

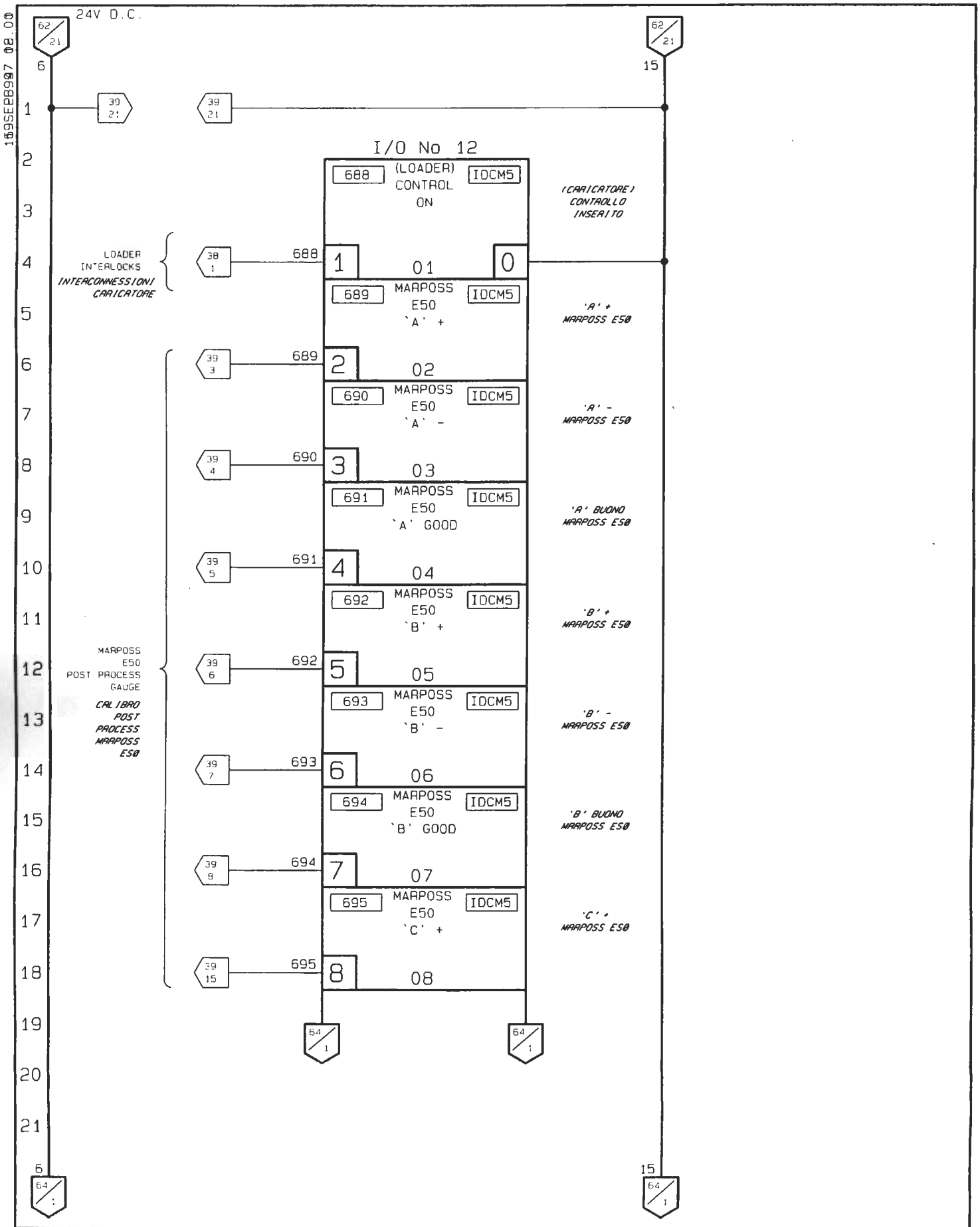

DRAWN RDP				TITLE P.C. INPUTS. *P.C. INGRESSI*	MICROFILM
CHECKED					REF.DRG –
APPROVED					SHEET 63
LAYOUT APP'D				M/C No 318-89	SHEETS 150

FMA

EY01529

NAME	DATE	C.I.	CHANGES
	17-02-97	M/O 9598	
	17-02-97	M/O 9597	
	17-02-97	M/O 9596	
	17-02-97	M/O 9595	
	17-02-97	M/O 9594	
	17-02-97	M/O 9593	
	17-02-97	M/O 9592	
	17-02-97	M/O 9591	
	17-02-97	M/O 9590	
	17-02-97	M/O 9589	

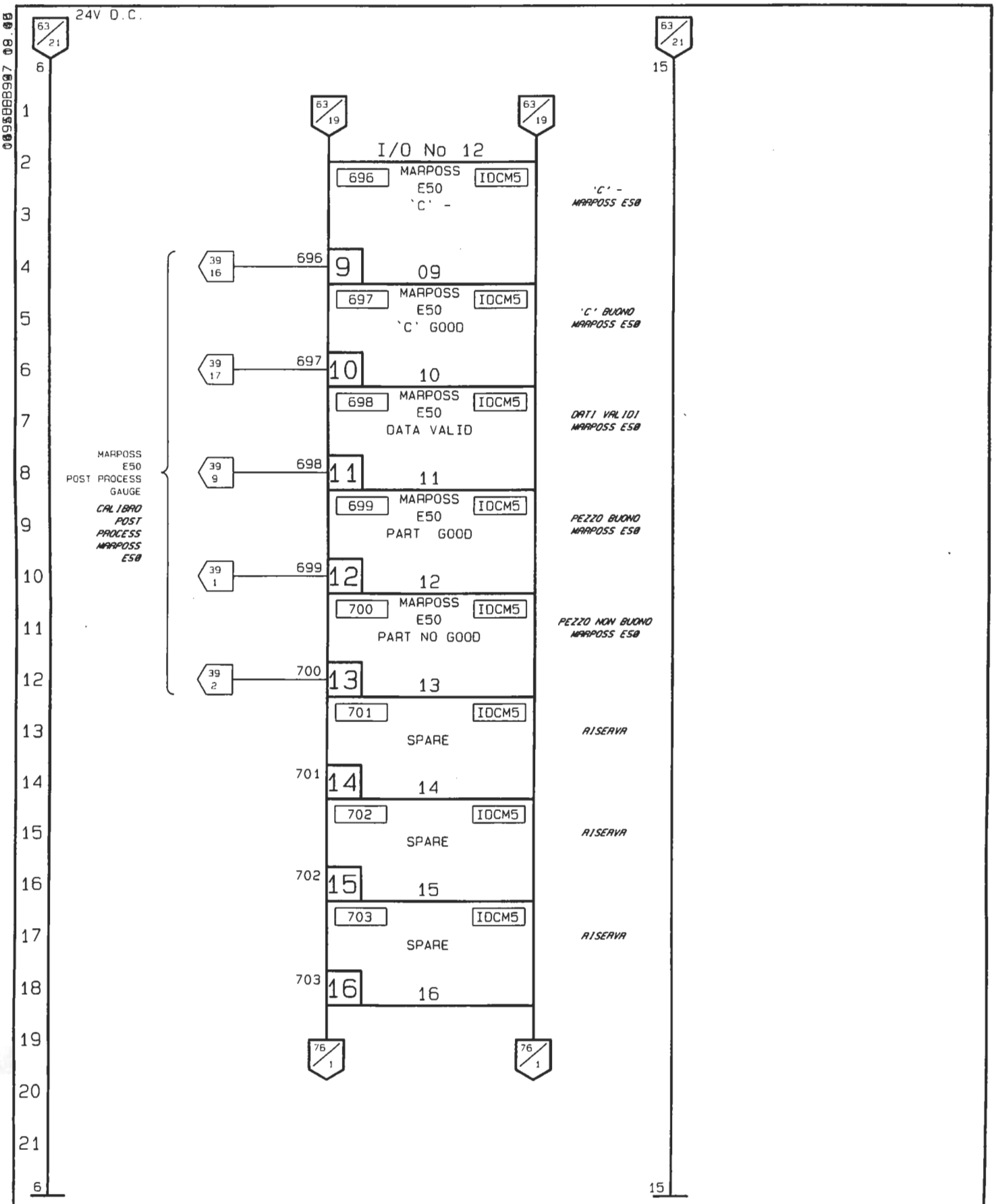

DRAWN RDP																	
CHECKED																	
APPROVED																	
LAYOUT APP'D																	

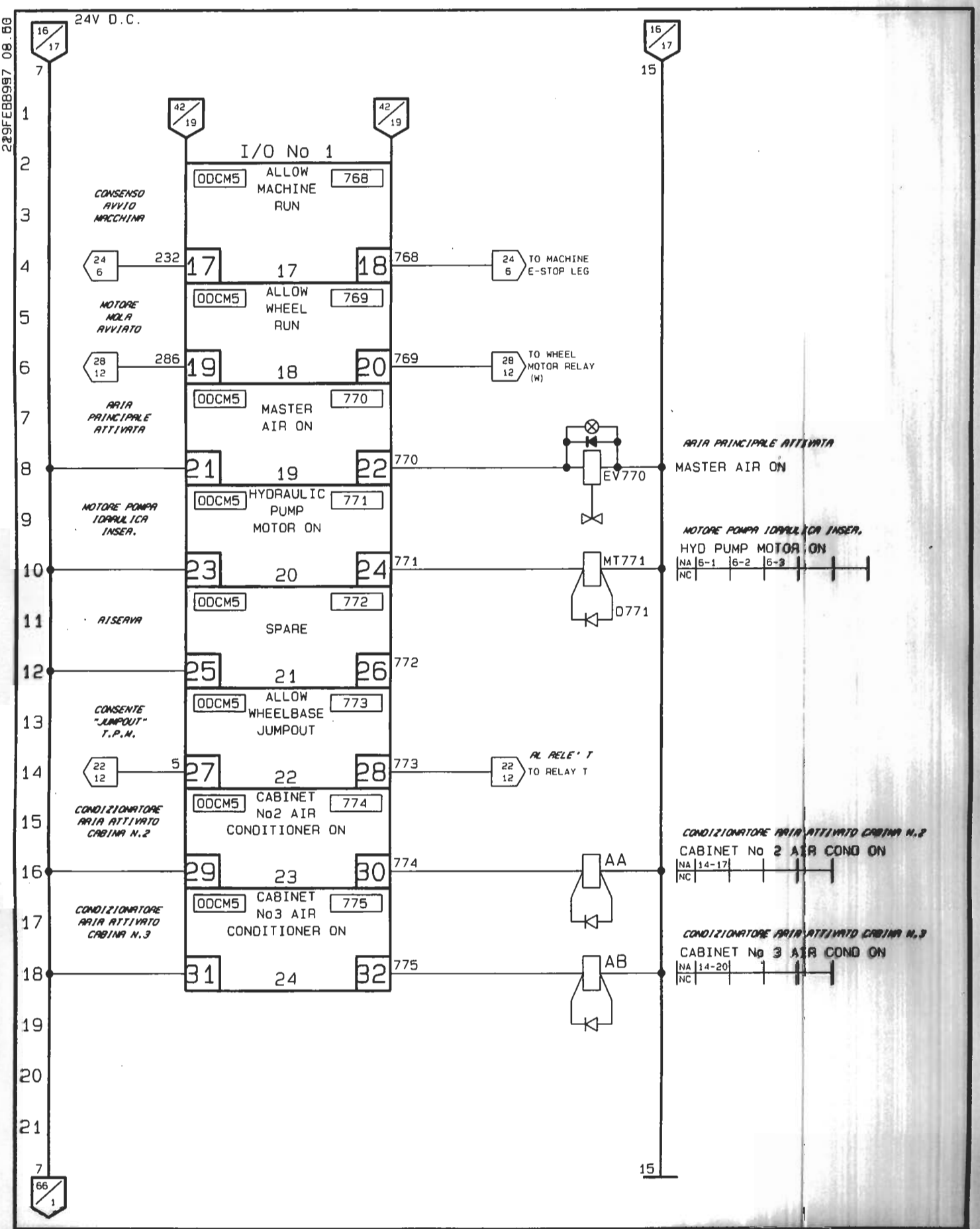
24V D.C.
I/O No 1
ODCM5
ALLOW MACHINE RUN
768
CONSENSO AVVIO MACCHINA
17
18
TO MACHINE E-STOP LEG
ALLOW WHEEL RUN
769
MOTORE MOLA AVVIATO
19
20
TO WHEEL MOTOR RELAY (W)
MASTER AIR ON
770
ARIA PRINCIPALE ATTIVATA
21
22
EV770
ARIA PRINCIPALE ATTIVATA
MASTER AIR ON
HYDRAULIC PUMP MOTOR ON
771
MOTORE POMPA IDRAULICA INSER.
23
24
MT771
O771
MOTORE POMPA IDRAULICA INSER.
HYD PUMP MOTOR ON
SPARE
772
RISERVA
25
26
ALLOW WHEELBASE JUMPOUT
773
CONSENTE "JUMPOUT" T.P.M.
27
28
AL RELE' T
TO RELAY T
CABINET No2 AIR CONDITIONER ON
774
CONDIZIONATORE ARIA ATTIVATO CABINA N.2
29
30
AA
CONDIZIONATORE ARIA ATTIVATO CABINA N.2
CABINET No 2 AIR COND ON
CABINET No3 AIR CONDITIONER ON
775
CONDIZIONATORE ARIA ATTIVATO CABINA N.3
31
32
AB
CONDIZIONATORE ARIA ATTIVATO CABINA N.3
CABINET No 3 AIR COND ON

| | | |

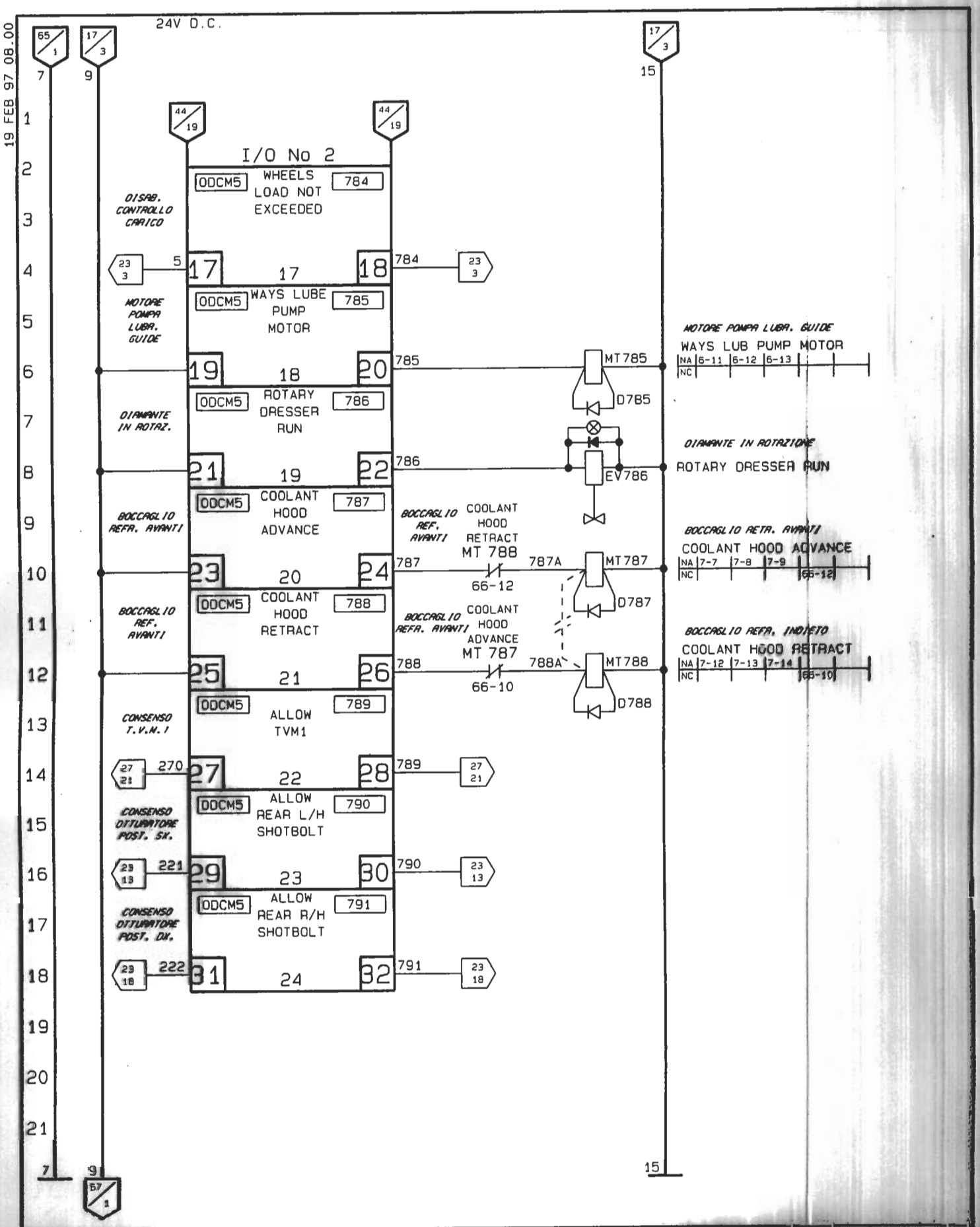
19 FEB 97 08.00
24V D.C.
I/O No 2
ODCM5 WHEELS LOAD NOT EXCEEDED 784
DISAB. CONTROLLO CARICO
17 17 18 784
MOTORE POMPA LUBR. GUIDE
ODCM5 WAYS LUBE PUMP MOTOR 785
19 18 20 785
MT785
D785
MOTORE POMPA LUBR. GUIDE
WAYS LUB PUMP MOTOR
NA 6-11 6-12 6-13
NC
DIAMANTE IN ROTAZ.
ODCM5 ROTARY DRESSER RUN 786
21 19 22 786
EV786
DIAMANTE IN ROTAZIONE
ROTARY DRESSER RUN
BOCCAGLIO REFR. AVANTI
ODCM5 COOLANT HOOD ADVANCE 787
BOCCAGLIO REF. AVANTI
COOLANT HOOD RETRACT
MT 788
23 20 24 787 787A
66-12
MT787
D787
BOCCAGLIO REFR. AVANTI
COOLANT HOOD ADVANCE
NA 7-7 7-8 7-9
NC 66-12
BOCCAGLIO REF. AVANTI
ODCM5 COOLANT HOOD RETRACT 788
BOCCAGLIO REFR. AVANTI
COOLANT HOOD ADVANCE
MT 787
25 21 26 788 788A
66-10
MT788
D788
BOCCAGLIO REFR. INDIETO
COOLANT HOOD RETRACT
NA 7-12 7-13 7-14
NC 66-10
CONSENSO T.V.N.1
ODCM5 ALLOW TVM1 789
27 22 28 789
CONSENSO OTTURATORE POST. SX.
ODCM5 ALLOW REAR L/H SHOTBOLT 790
29 23 30 790
CONSENSO OTTURATORE POST. DX.
ODCM5 ALLOW REAR R/H SHOTBOLT 791
31 24 32 791

| | | |

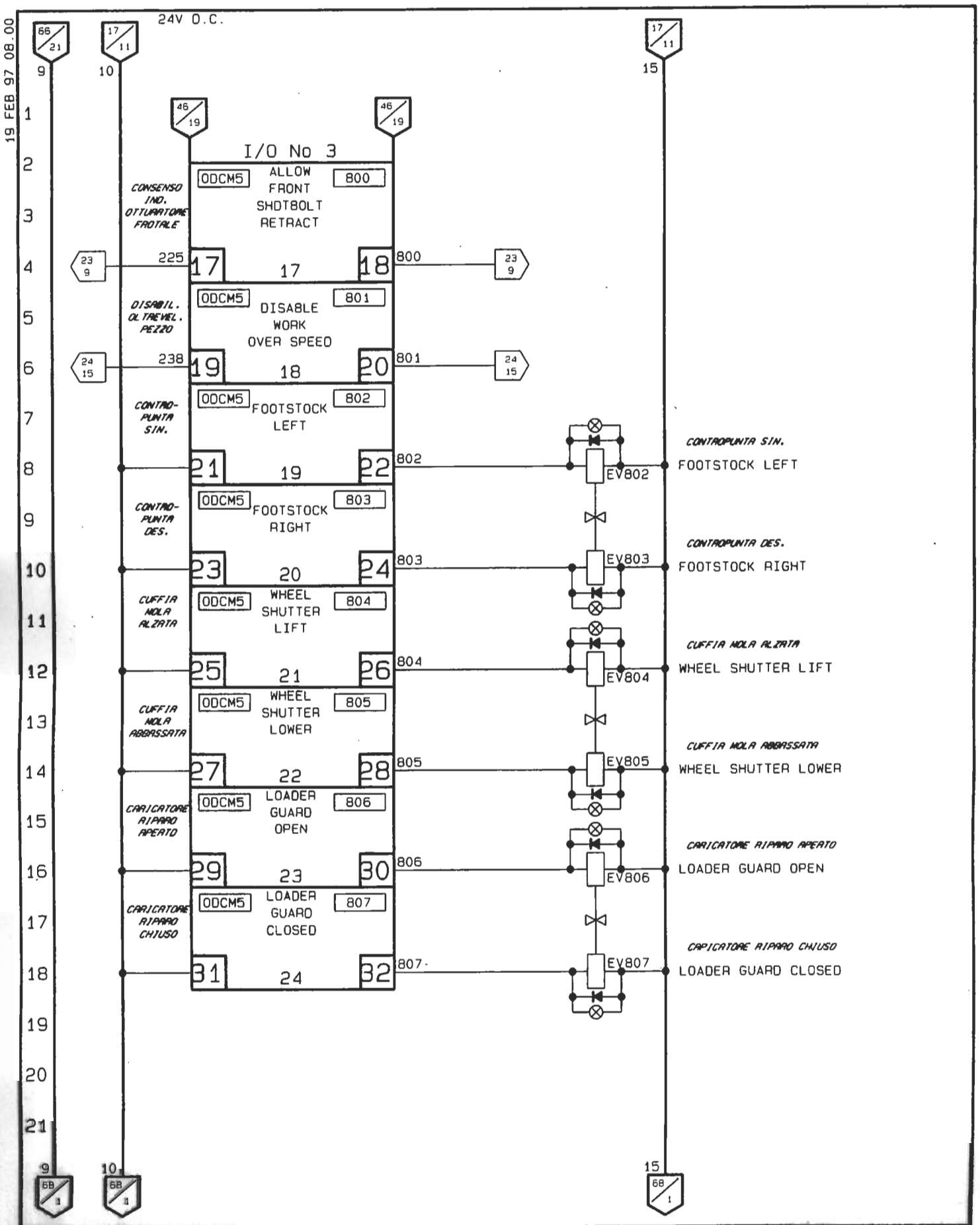
19 FEB 97 08.00
24V D.C.
I/O No 3
ODCM5
ALLOW FRONT SHOTBOLT RETRACT
800
CONSENSO IND. OTTURATORE FRONTALE
225
17
17
18
800
DISABLE WORK OVER SPEED
801
DISABIL. OLTREVEL. PEZZO
238
19
18
20
801
FOOTSTOCK LEFT
802
CONTRO-PUNTA SIN.
21
19
22
802
EV802
CONTROPUNTA SIN.
FOOTSTOCK LEFT
FOOTSTOCK RIGHT
803
CONTRO-PUNTA DES.
23
20
24
803
EV803
CONTROPUNTA DES.
FOOTSTOCK RIGHT
WHEEL SHUTTER LIFT
804
CUFFIA MOLA ALZATA
25
21
26
804
EV804
CUFFIA MOLA ALZATA
WHEEL SHUTTER LIFT
WHEEL SHUTTER LOWER
805
CUFFIA MOLA ABBASSATA
27
22
28
805
EV805
CUFFIA MOLA ABBASSATA
WHEEL SHUTTER LOWER
LOADER GUARD OPEN
806
CARICATORE RIPARO APERTO
29
23
30
806
EV806
CARICATORE RIPARO APERTO
LOADER GUARD OPEN
LOADER GUARD CLOSED
807
CARICATORE RIPARO CHIUSO
31
24
32
807
EV807
CARICATORE RIPARO CHIUSO
LOADER GUARD CLOSED
DRAWN ROP
CHECKED
APPROVED
LAYOUT APP'D
NAME
DATE
C.I.
CHANGES
TITLE
P.C. OUTPUTS.
P.C. USCITE
M/C No 318-89
FMA
EY01529
MICROFILM
REF.DRG
SHEET 67
SHEETS 150

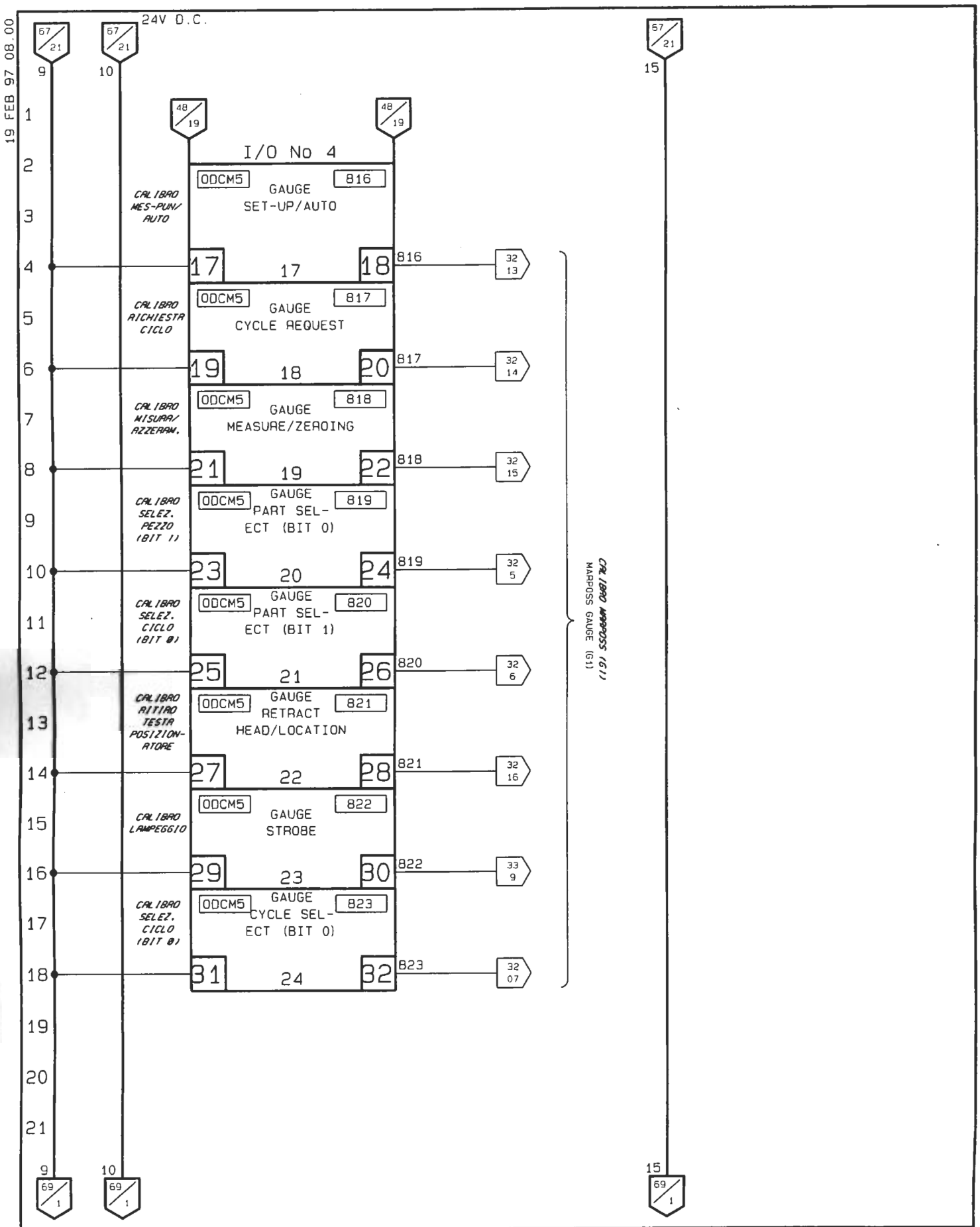
19 FEB 97 08.00
24V D.C.
67/21
48/19
69/1
I/O No 4
ODCM5
GAUGE SET-UP/AUTO
816
CALIBRO MES-PUN/ AUTO
17
18
GAUGE CYCLE REQUEST
817
CALIBRO RICHIESTA CICLO
19
20
GAUGE MEASURE/ZEROING
818
CALIBRO MISURA/ AZZERAM.
21
22
GAUGE PART SELECT (BIT 0)
819
CALIBRO SELEZ. PEZZO (BIT 1)
23
24
GAUGE PART SELECT (BIT 1)
820
CALIBRO SELEZ. CICLO (BIT 0)
25
26
GAUGE RETRACT HEAD/LOCATION
821
CALIBRO RITIRO TESTA POSIZIONATORE
27
28
GAUGE STROBE
822
CALIBRO LAMPEGGIO
29
30
GAUGE CYCLE SELECT (BIT 0)
823
CALIBRO SELEZ. CICLO (BIT 0)
31
32
32 13
32 14
32 15
32 5
32 6
32 16
33 9
32 07
MARPOSS GAUGE (G1)
CAL 1990 MARPOSS (G1)

| | | |

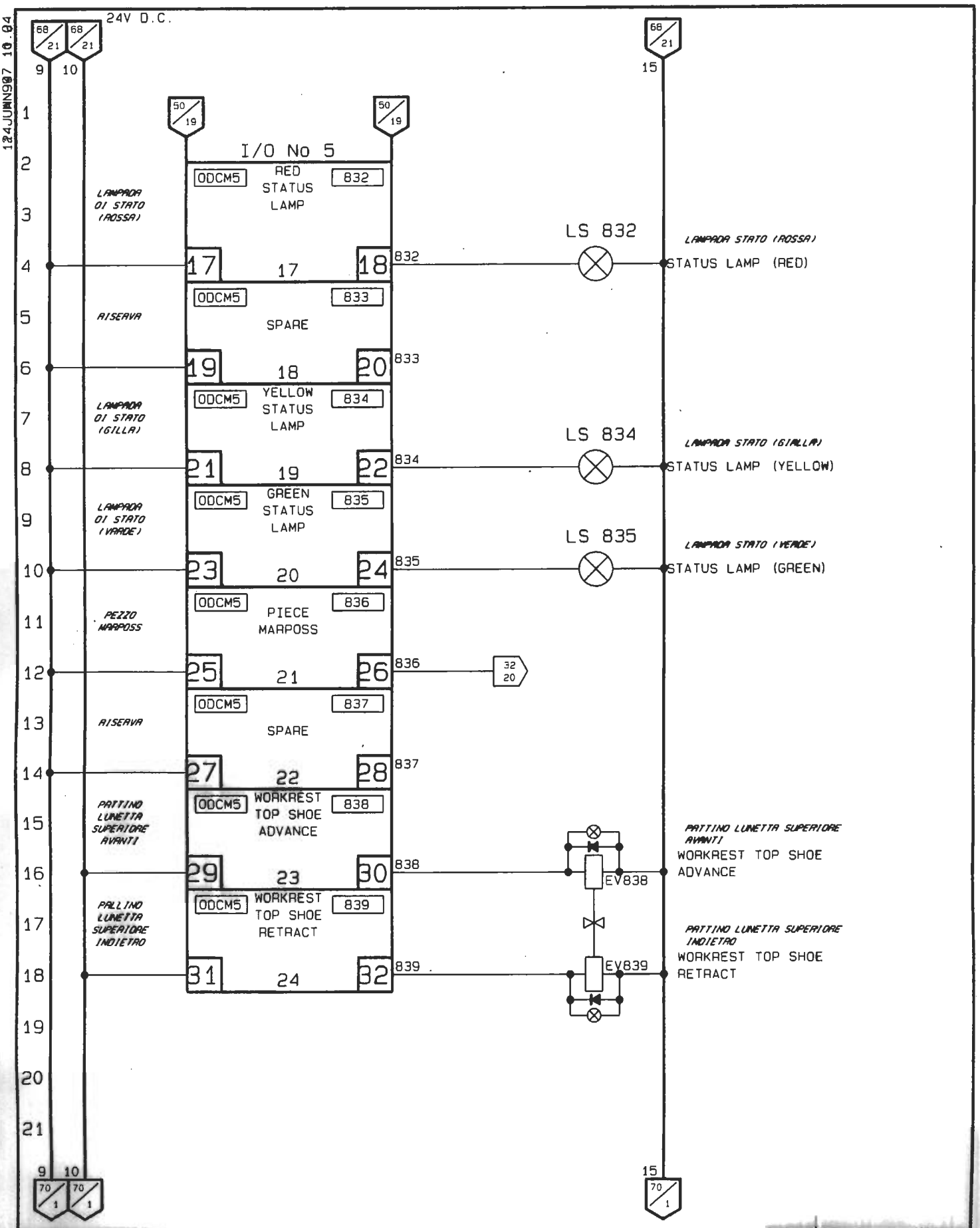

DRAWN RDP		NAME JJC	TITLE P.C. OUTPUTS. *P.C. USCITE*	FMA
CHECKED		DATE 24.1.97		MICROFILM
APPROVED		C.I. MMU775		REF.DRG –
LAYOUT APP'D		CHANGES	M/C No 318-89	EY01529
				SHEET 69
				SHEETS 150

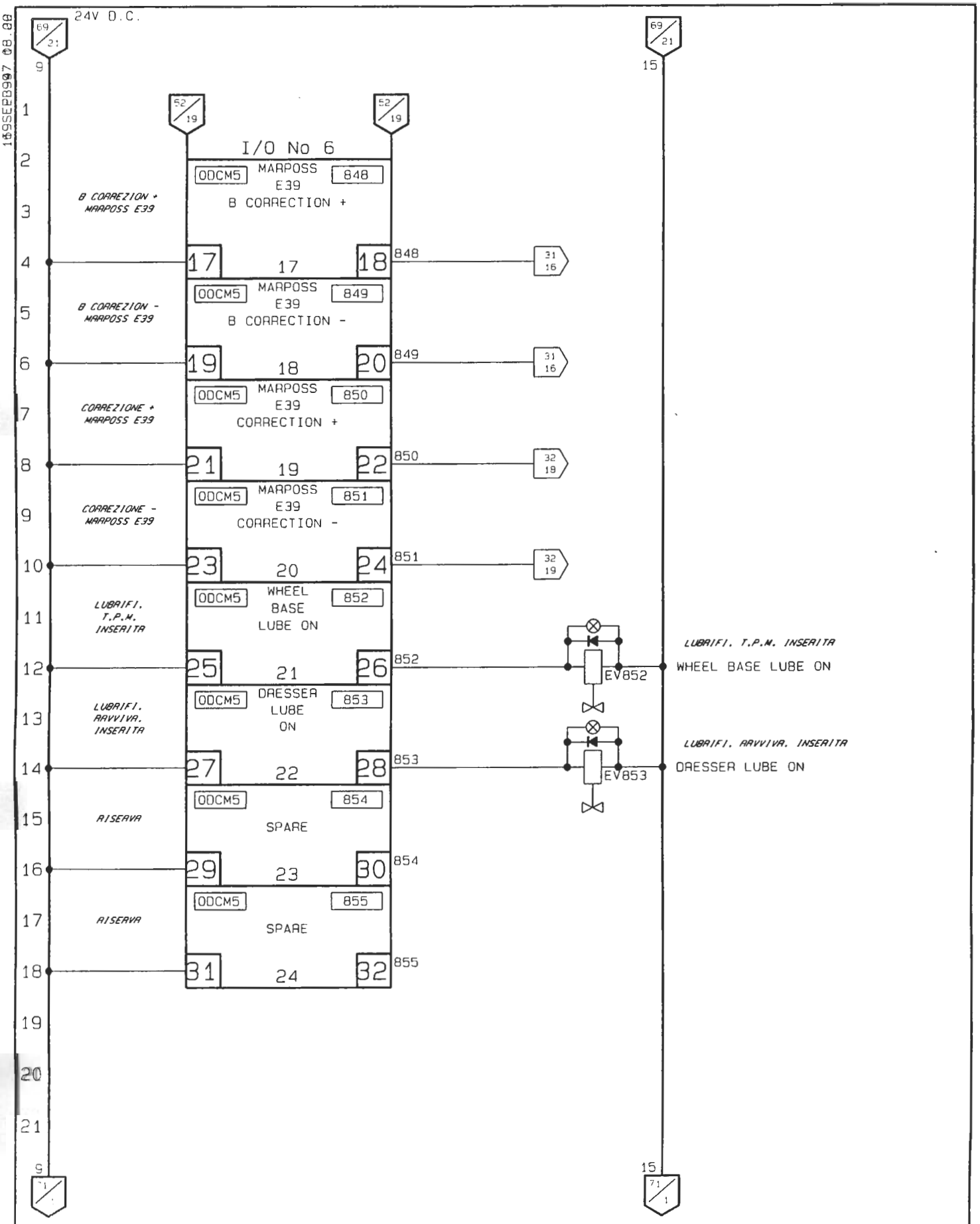

DRAWN ADP			MICROFILM
CHECKED			REF DRG –
APPROVED			SHEET 70
LAYOUT APP'D			SHEETS 150

TITLE: P.C. OUTPUTS.

P.C. USCITE

M/C No 318-89

FMA

EY01529

CHANGES: NAME | DATE | C.I.

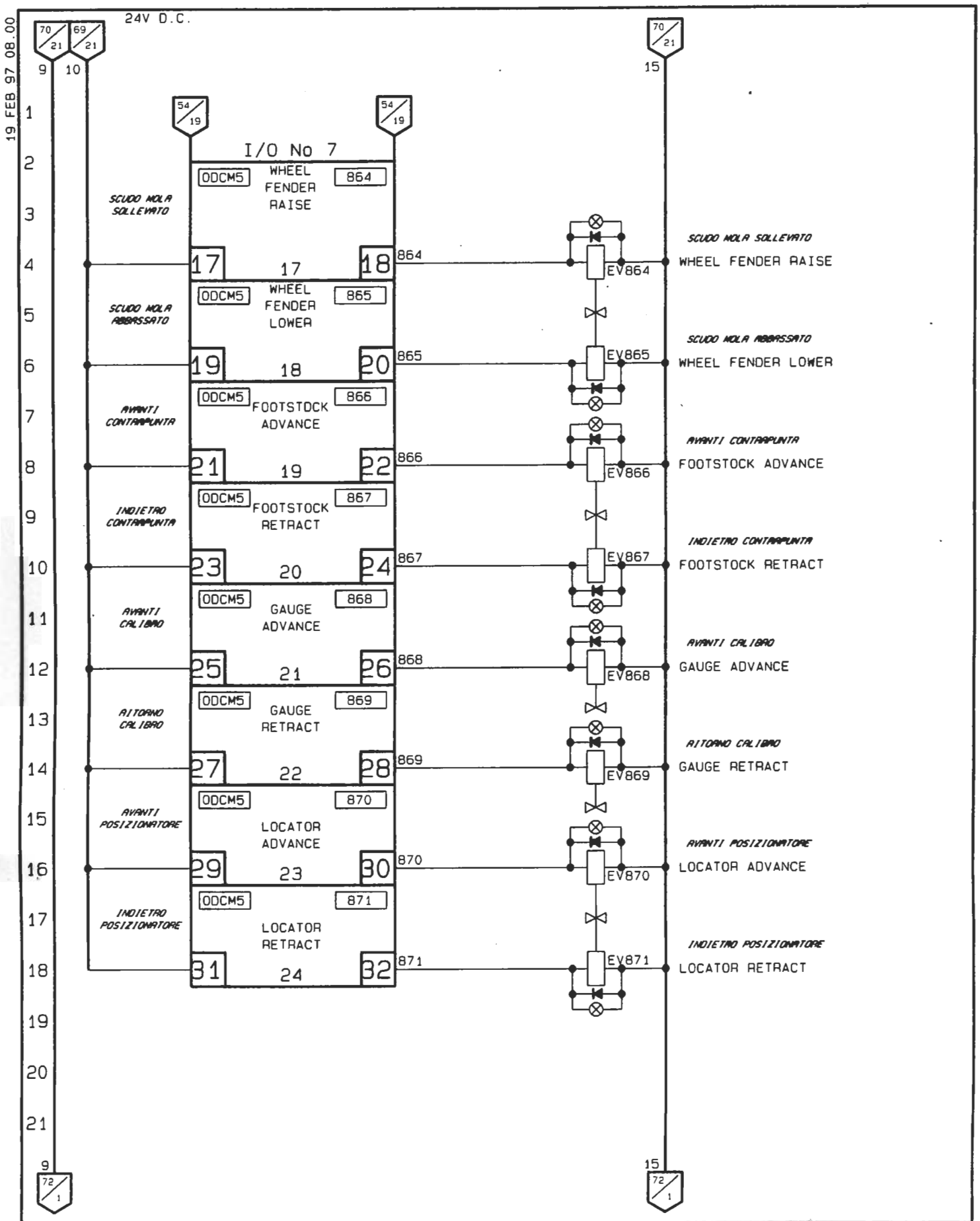
19 FEB 97 08.00
24V D.C.
70/21
69/21
54/19
I/O No 7
ODCM5
WHEEL FENDER RAISE
864
17
18
WHEEL FENDER LOWER
865
19
20
FOOTSTOCK ADVANCE
866
21
22
FOOTSTOCK RETRACT
867
23
24
GAUGE ADVANCE
868
25
26
GAUGE RETRACT
869
27
28
LOCATOR ADVANCE
870
29
30
LOCATOR RETRACT
871
31
32
SCUDO MOLA SOLLEVATO
SCUDO MOLA ABBASSATO
AVANTI CONTRAPUNTA
INDIETRO CONTRAPUNTA
AVANTI CALIBRO
RITORNO CALIBRO
AVANTI POSIZIONATORE
INDIETRO POSIZIONATORE
EV864
EV865
EV866
EV867
EV868
EV869
EV870
EV871
72/1

| | | |

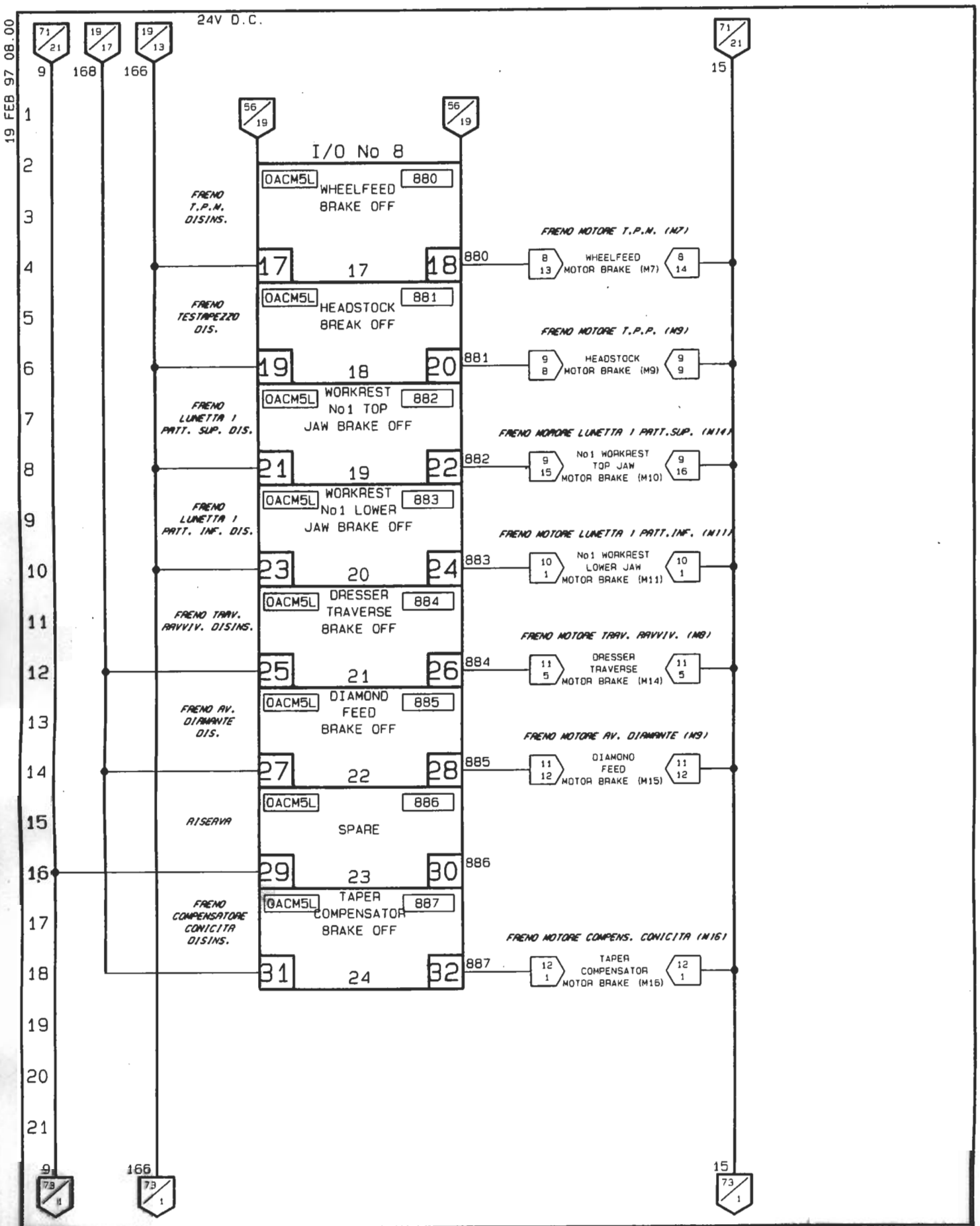
19 FEB 97 08.00
24V D.C.
71/21
19/17
19/13
56/19
I/O No 8
OACM5L
WHEELFEED BRAKE OFF
880
FRENO T.P.N. DISINS.
17
18
FRENO MOTORE T.P.N. (M7)
WHEELFEED MOTOR BRAKE (M7)
HEADSTOCK BREAK OFF
881
FRENO TESTAPEZZO DIS.
19
20
FRENO MOTORE T.P.P. (M9)
HEADSTOCK MOTOR BRAKE (M9)
WORKREST No1 TOP JAW BRAKE OFF
882
FRENO LUNETTA 1 PATT. SUP. DIS.
21
22
FRENO MOTORE LUNETTA 1 PATT.SUP. (M14)
No1 WORKREST TOP JAW MOTOR BRAKE (M10)
WORKREST No1 LOWER JAW BRAKE OFF
883
FRENO LUNETTA 1 PATT. INF. DIS.
23
24
FRENO MOTORE LUNETTA 1 PATT.INF. (M11)
No1 WORKREST LOWER JAW MOTOR BRAKE (M11)
DRESSER TRAVERSE BRAKE OFF
884
FRENO TRAV. RAVVIV. DISINS.
25
26
FRENO MOTORE TRAV. RAVVIV. (M8)
DRESSER TRAVERSE MOTOR BRAKE (M14)
DIAMOND FEED BRAKE OFF
885
FRENO AV. DIAMANTE DIS.
27
28
FRENO MOTORE AV. DIAMANTE (M9)
DIAMOND FEED MOTOR BRAKE (M15)
SPARE
886
RISERVA
29
30
TAPER COMPENSATOR BRAKE OFF
887
FRENO COMPENSATORE CONICITA DISINS.
31
32
FRENO MOTORE COMPENS. CONICITA (M16)
TAPER COMPENSATOR MOTOR BRAKE (M16)
73/1
78/11

| | | |

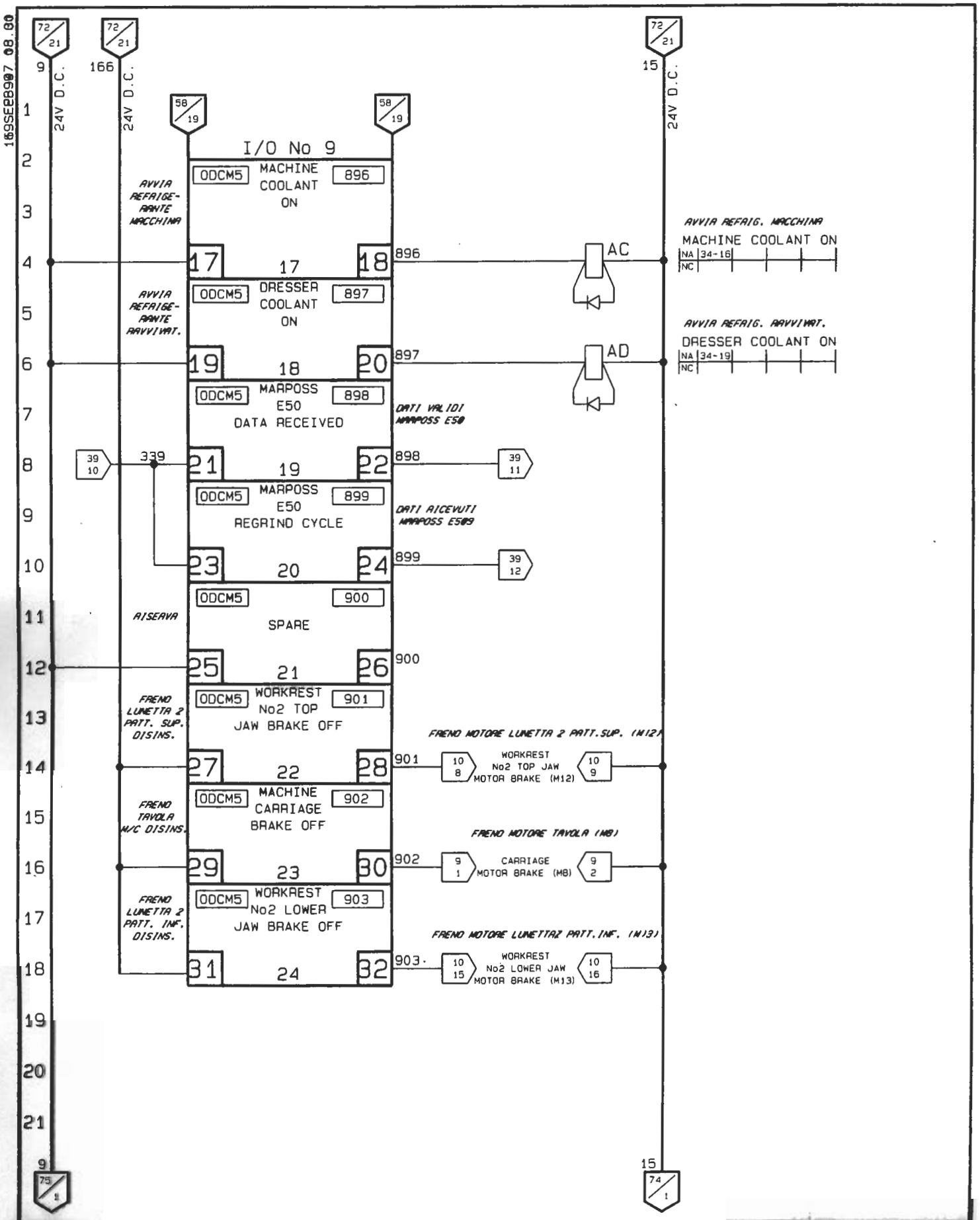
169SE28907 08.00
72/21
9
24V D.C.
166
24V D.C.
15
24V D.C.
58/19
I/O No 9
ODCM5
MACHINE COOLANT ON
896
AVVIA REFRIGE-RANTE MACCHINA
17
17
18
896
AC
AVVIA REFRIG. MACCHINA
MACHINE COOLANT ON
NA 34-16
NC
ODCM5
DRESSER COOLANT ON
897
AVVIA REFRIGE-RANTE RAVVIVAT.
19
18
20
897
AD
AVVIA REFRIG. RAVVIVAT.
DRESSER COOLANT ON
NA 34-19
NC
ODCM5
MARPOSS E50 DATA RECEIVED
898
DATI VALIDI MARPOSS E50
39 10
339
21
19
22
898
39 11
ODCM5
MARPOSS E50 REGRIND CYCLE
899
DATI RICEVUTI MARPOSS E50
23
20
24
899
39 12
ODCM5
900
SPARE
RISERVA
25
21
26
900
ODCM5
WORKREST No2 TOP JAW BRAKE OFF
901
FRENO LUNETTA 2 PATT. SUP. DISINS.
FRENO MOTORE LUNETTA 2 PATT.SUP. (M12)
27
22
28
901
10 8
WORKREST No2 TOP JAW MOTOR BRAKE (M12)
10 9
ODCM5
MACHINE CARRIAGE BRAKE OFF
902
FRENO TAVOLA M/C DISINS.
FRENO MOTORE TAVOLA (M8)
29
23
30
902
9 1
CARRIAGE MOTOR BRAKE (M8)
9 2
ODCM5
WORKREST No2 LOWER JAW BRAKE OFF
903
FRENO LUNETTA 2 PATT. INF. DISINS.
FRENO MOTORE LUNETTA2 PATT.INF. (M13)
31
24
32
903
10 15
WORKREST No2 LOWER JAW MOTOR BRAKE (M13)
10 16
75/1
74/1

| | | |

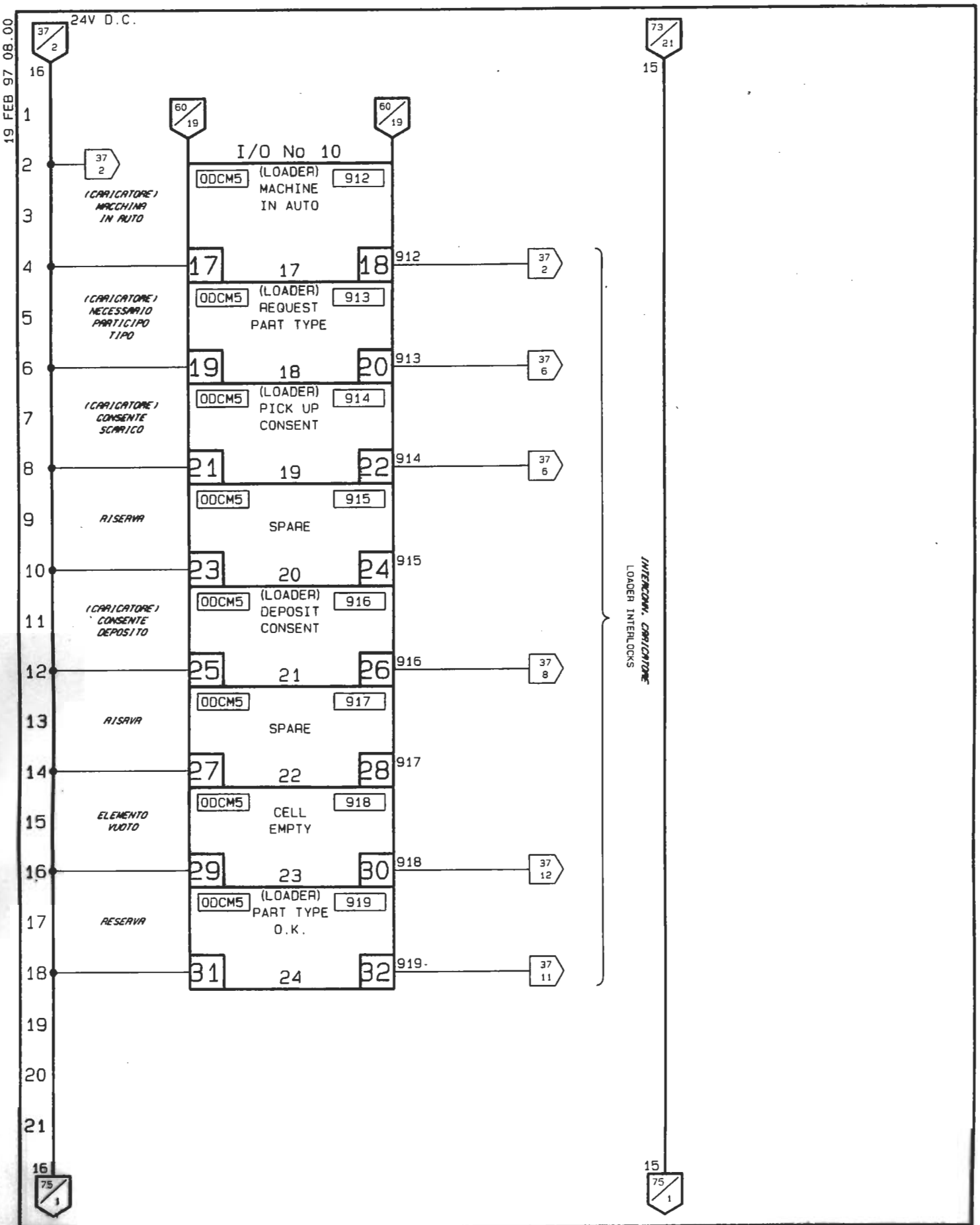
19 FEB 97 08.00
24V D.C.
37/2
73/21
60/19
60/19
I/O No 10
ODCM5
(LOADER) MACHINE IN AUTO
912
(CARICATORE) MACCHINA IN AUTO
17
17
18
912
ODCM5
(LOADER) REQUEST PART TYPE
913
(CARICATORE) NECESSARIO PARTICIPO TIPO
19
18
20
913
ODCM5
(LOADER) PICK UP CONSENT
914
(CARICATORE) CONSENTE SCARICO
21
19
22
914
ODCM5
SPARE
915
RISERVA
23
20
24
915
ODCM5
(LOADER) DEPOSIT CONSENT
916
(CARICATORE) CONSENTE DEPOSITO
25
21
26
916
ODCM5
SPARE
917
RISERVA
27
22
28
917
ODCM5
CELL EMPTY
918
ELEMENTO VUOTO
29
23
30
918
ODCM5
(LOADER) PART TYPE O.K.
919
RESERVA
31
24
32
919
INTERCOMM. CARICATORE
LOADER INTERLOCKS
75/1
75/1

| | | |

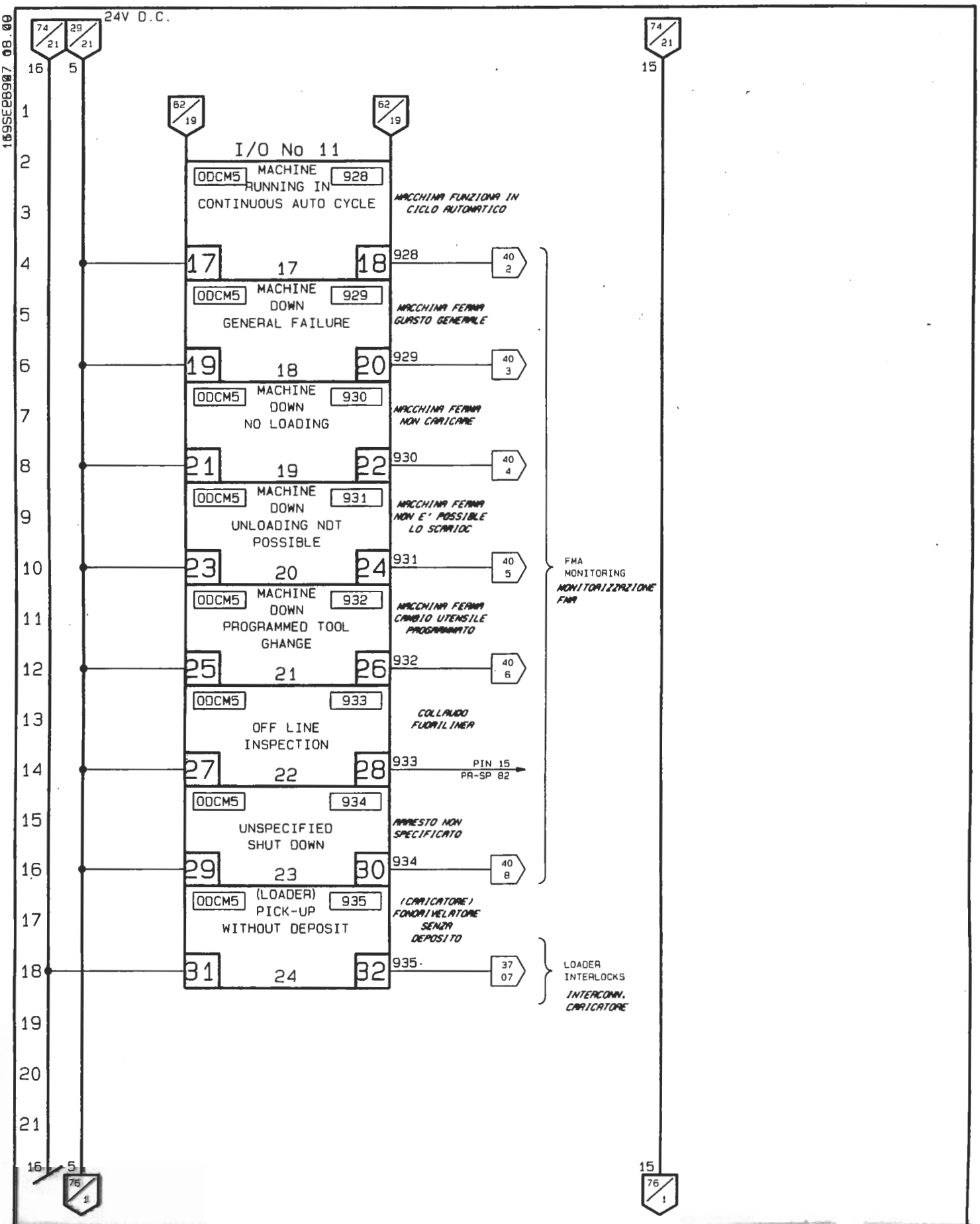

DRAWN RDP				TITLE P.C. OUTPUTS. *P.C. USCITE*	FMA
CHECKED					EY01529
APPROVED				M/C No 318-89	SHEET 75
LAYOUT APP'D					SHEETS 150
	NAME	DATE	C.I.	CHANGES	MICROFILM / ABF.DRG

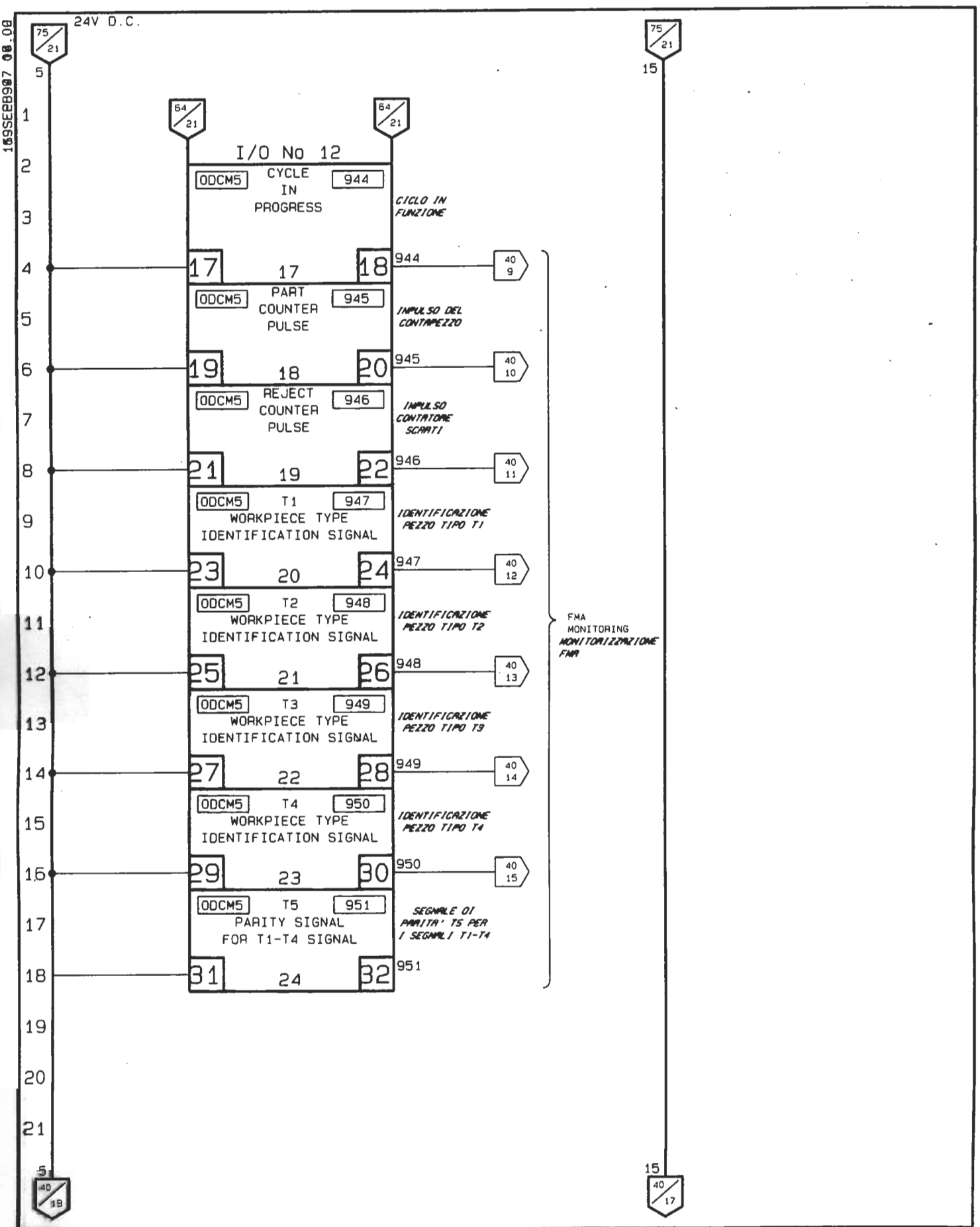

DRAWN RDP					KE	KE	KE	KE	KE	KE	KE	KE	KE	NAME	CHANGES	TITLE	MICROFILM
CHECKED					17-02-97	17-02-97	17-02-97	17-02-97	17-02-97	17-02-97	17-02-97	17-02-97	17-02-97	DATE		P.C. OUTPUTS.	REF.DRG –
APPROVED					W/O 95856	W/O 97833	W/O 97287	W/O 97562	W/O 97564	W/O 95607	W/O 95950	W/O 97032		C.I.		P.C. USCITE	SHEET 76
LAYOUT APP'D																M/C No 318-89	SHEETS 150

FMA

EY01529

19 FEB 97 08.00

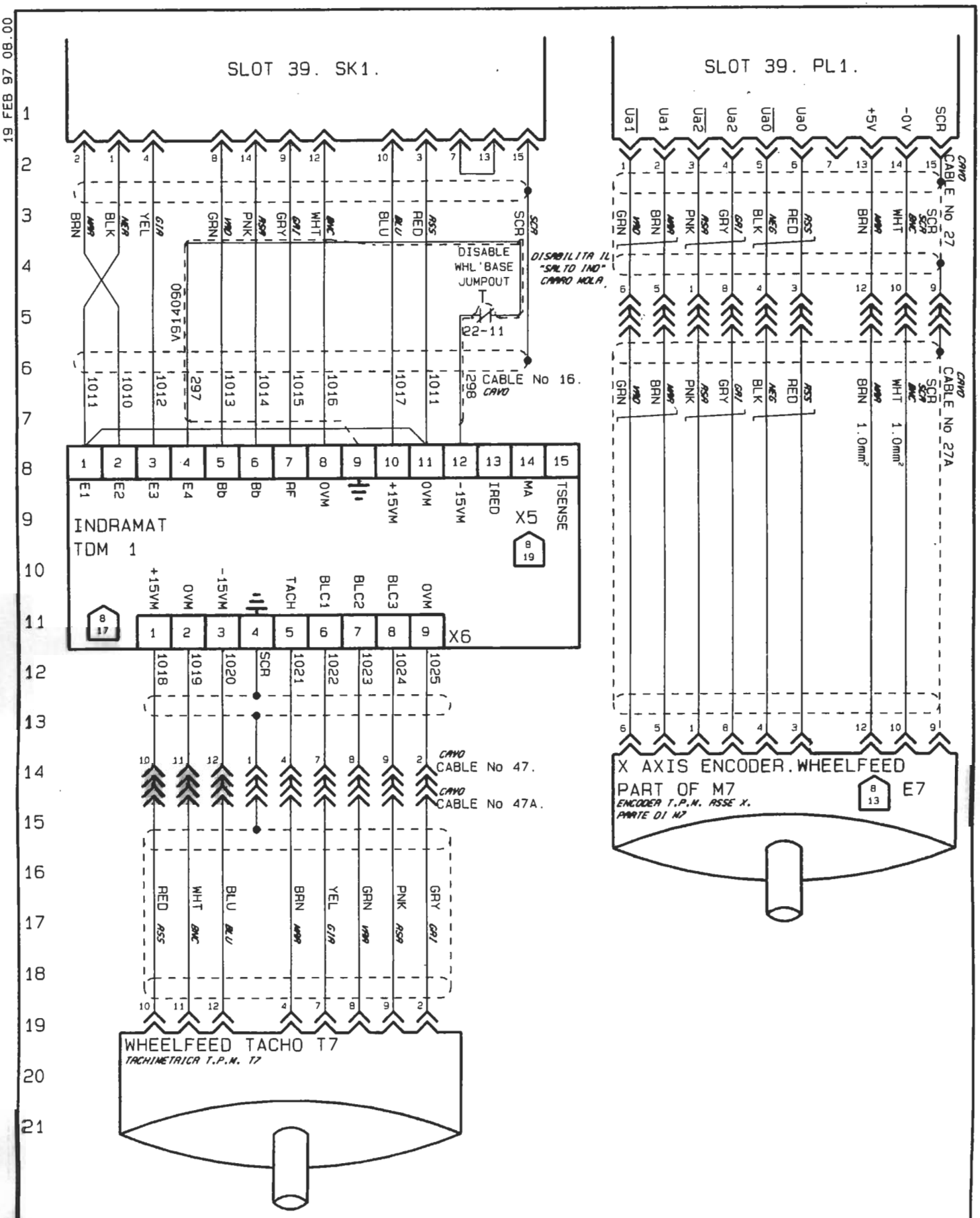

| | | |

19 FEB 97 08.00

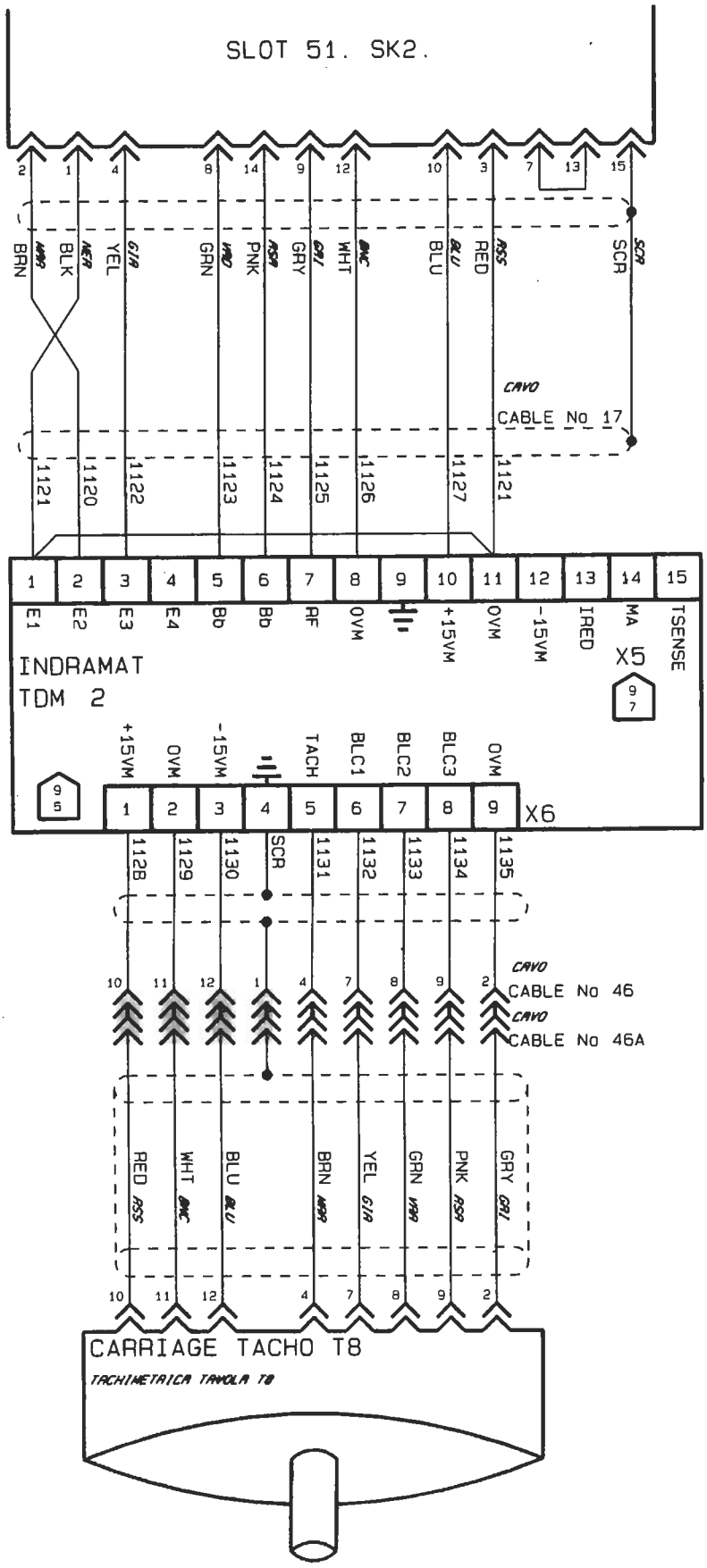

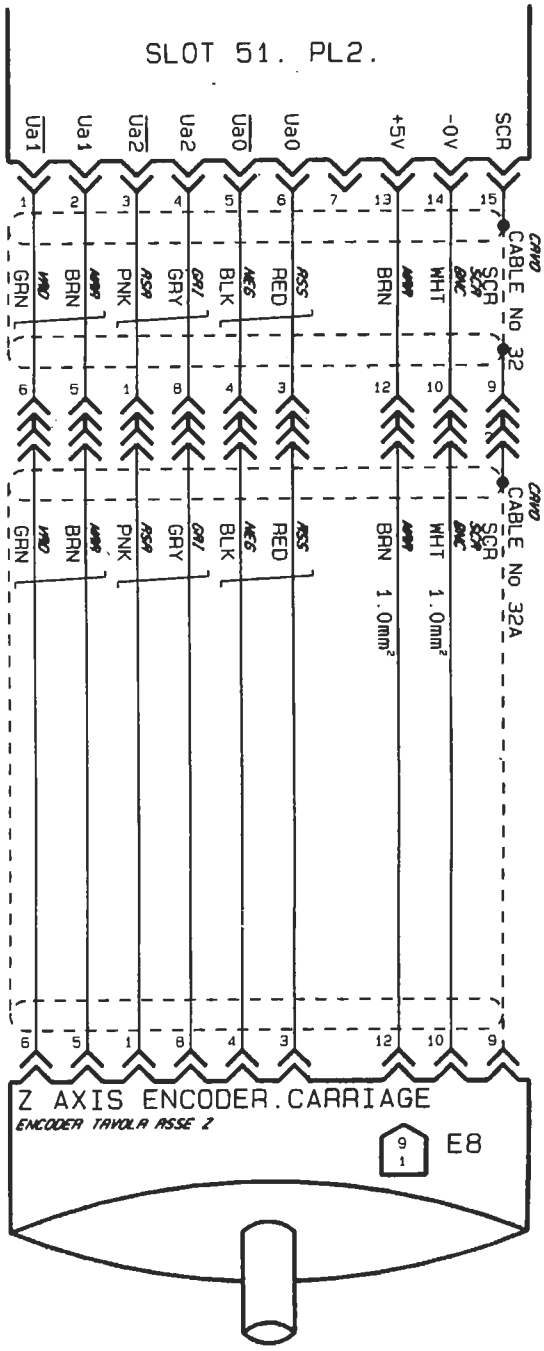

| | | |

19 FEB 97 08.00

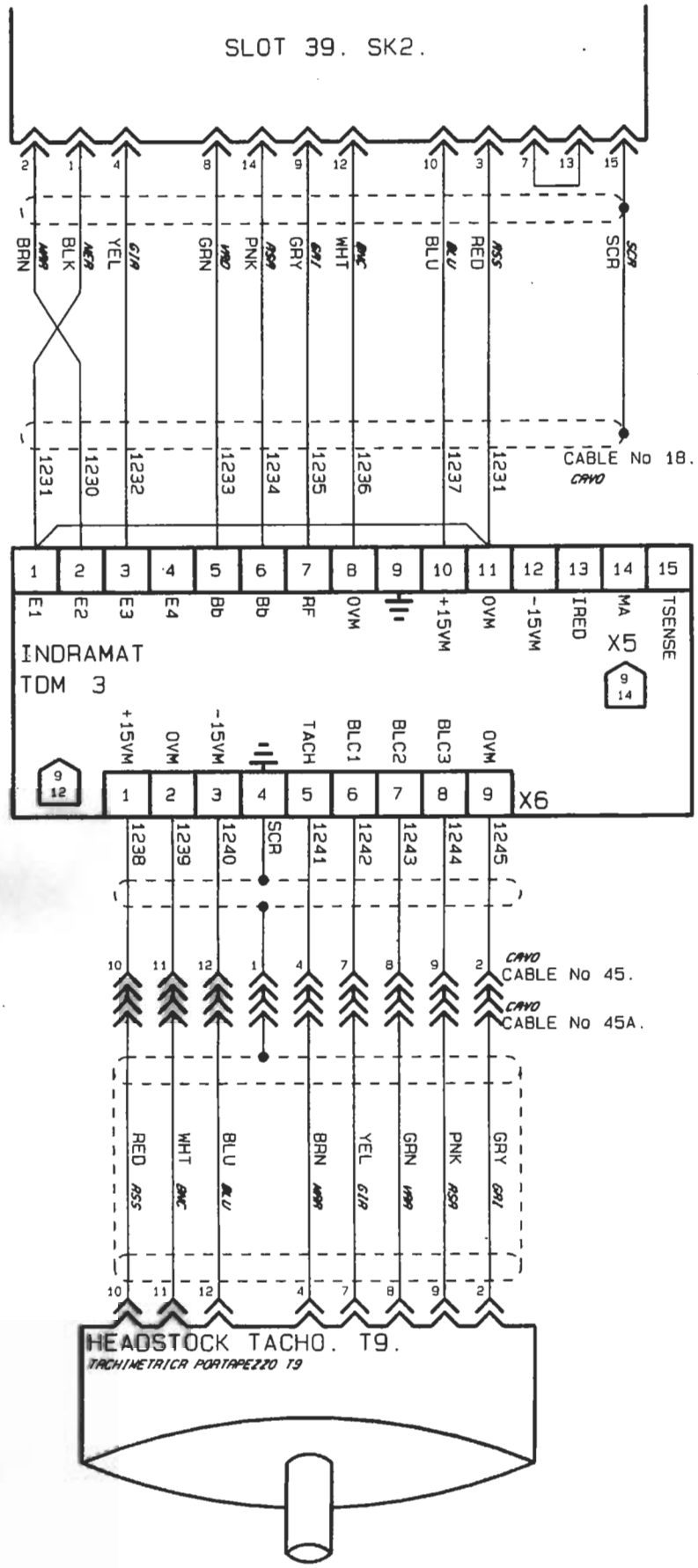

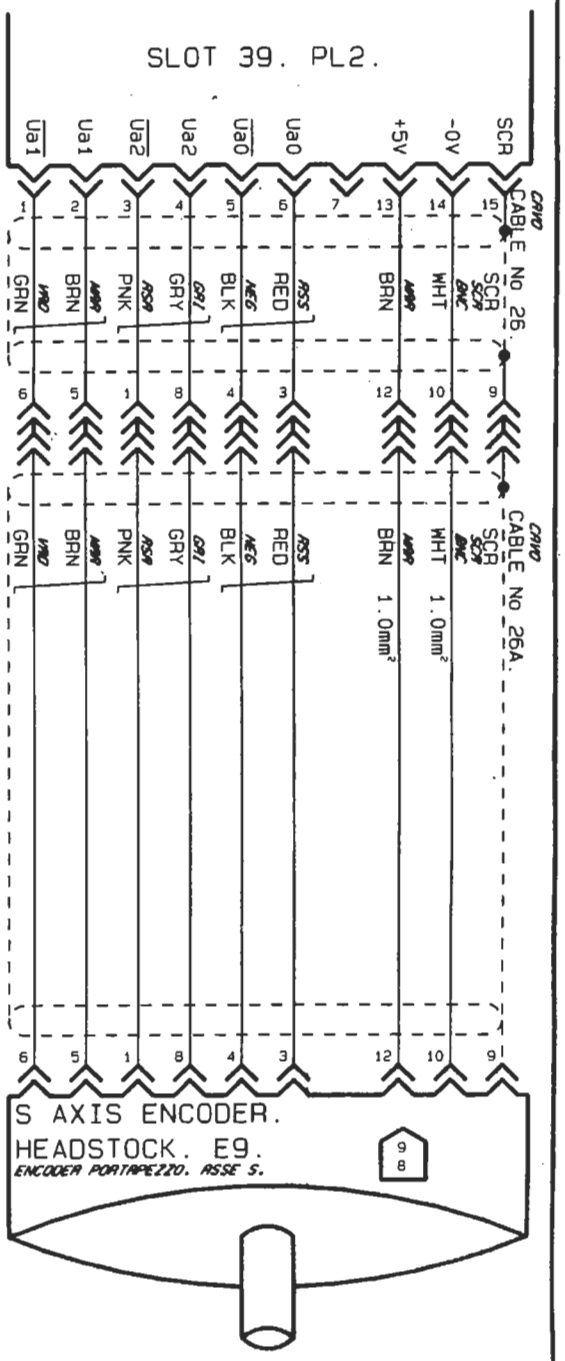

| | | |

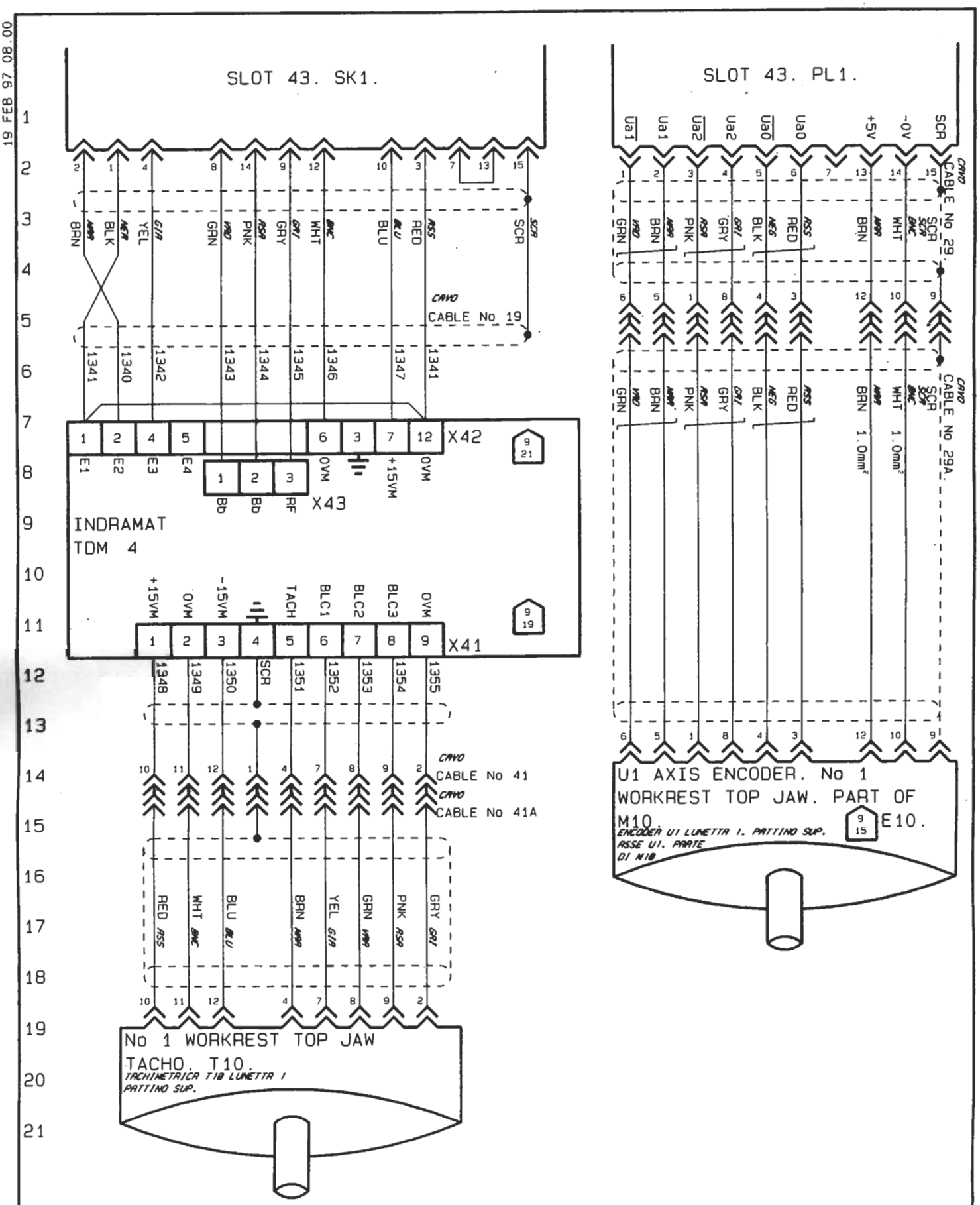
SLOT 43. SK1.
SLOT 43. PL1.
CABLE No 19
CABLE No 29
CABLE No 29A
X42
X43
X41
INDRAMAT
TDM 4
CABLE No 41
CABLE No 41A
U1 AXIS ENCODER. No 1
WORKREST TOP JAW. PART OF
M10.
E10.
ENCODER U1 LUNETTA 1. PATTINO SUP.
ASSE U1. PARTE
DI M10
No 1 WORKREST TOP JAW
TACHO. T10.
TACHIMETRICA T10 LUNETTA 1
PATTINO SUP.

| | | |

19 FEB 97 08.00

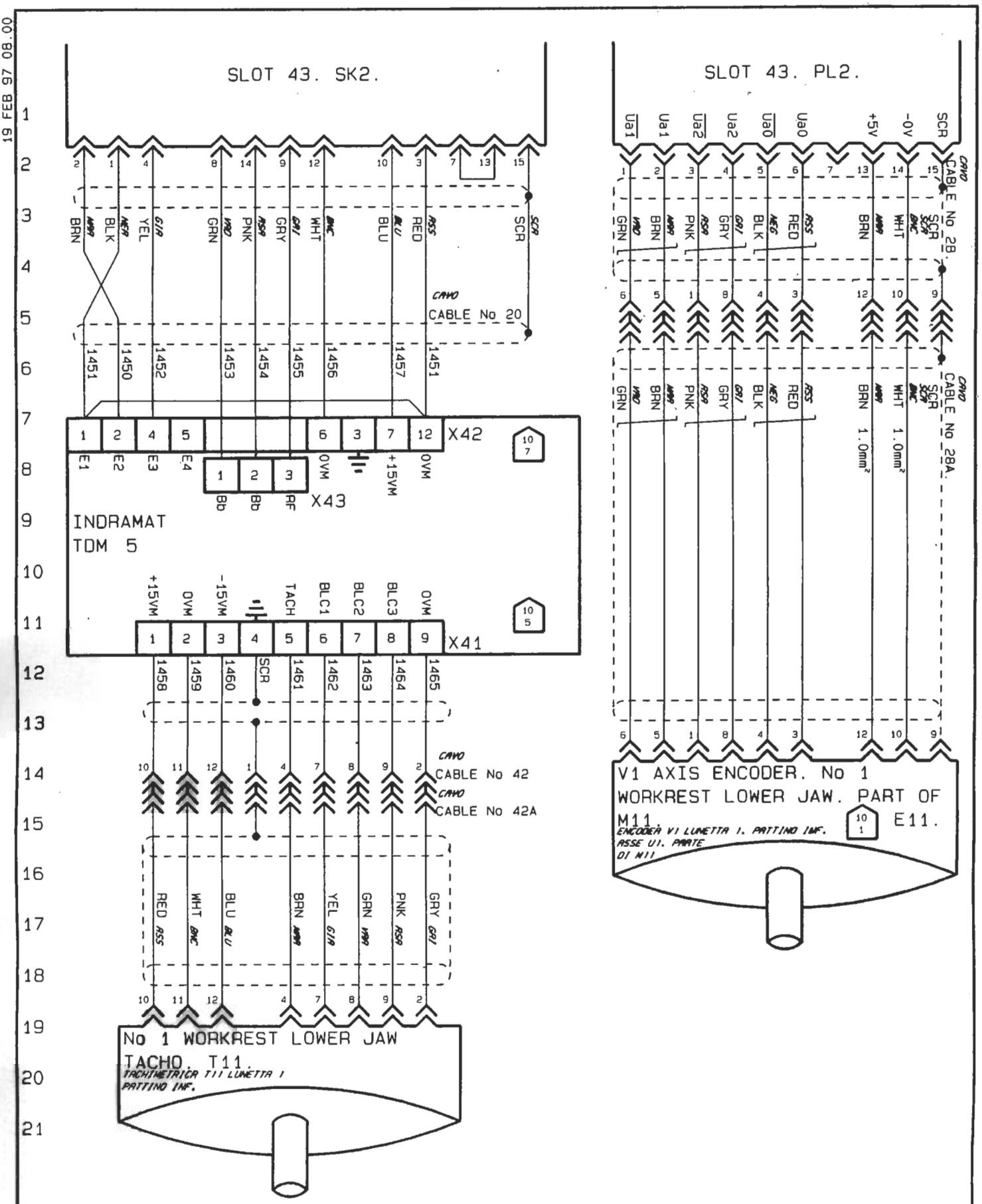

| | | |

19 FEB 97 08.00

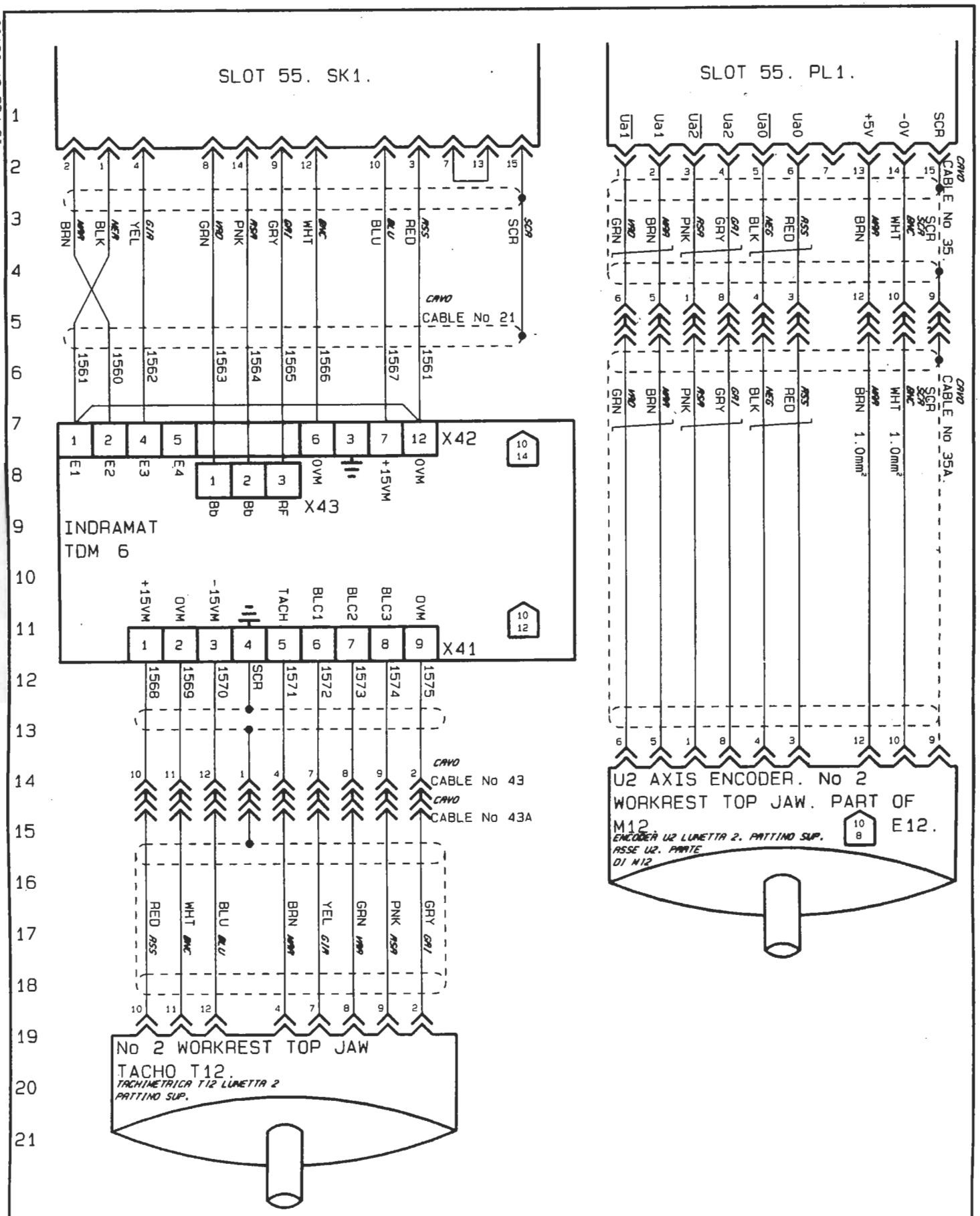

DRAWN RDP																	
CHECKED																	
APPROVED																	
LAYOUT APP'D																	

19 FEB 97 08.00

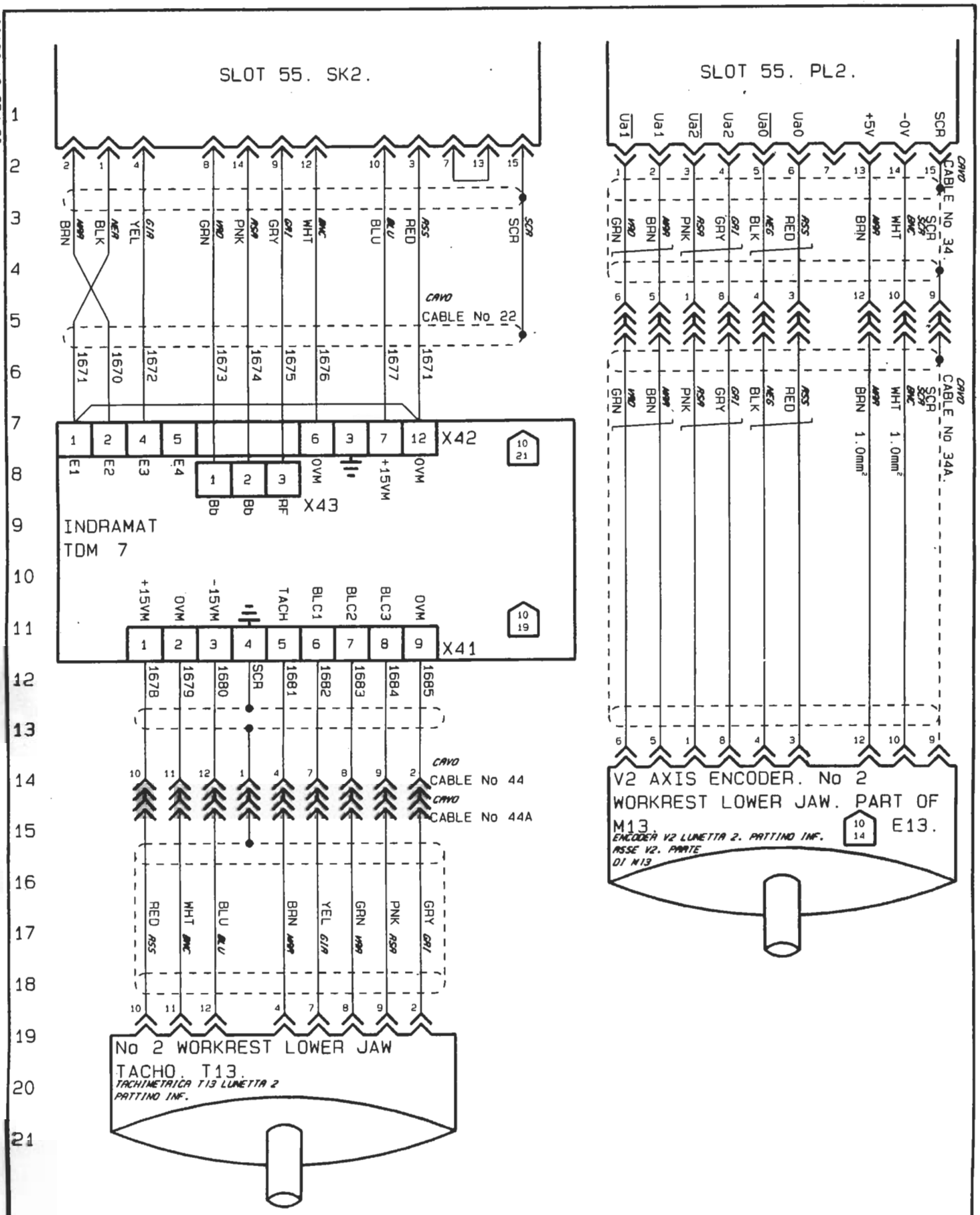

| | | |

19 FEB 97 08.00

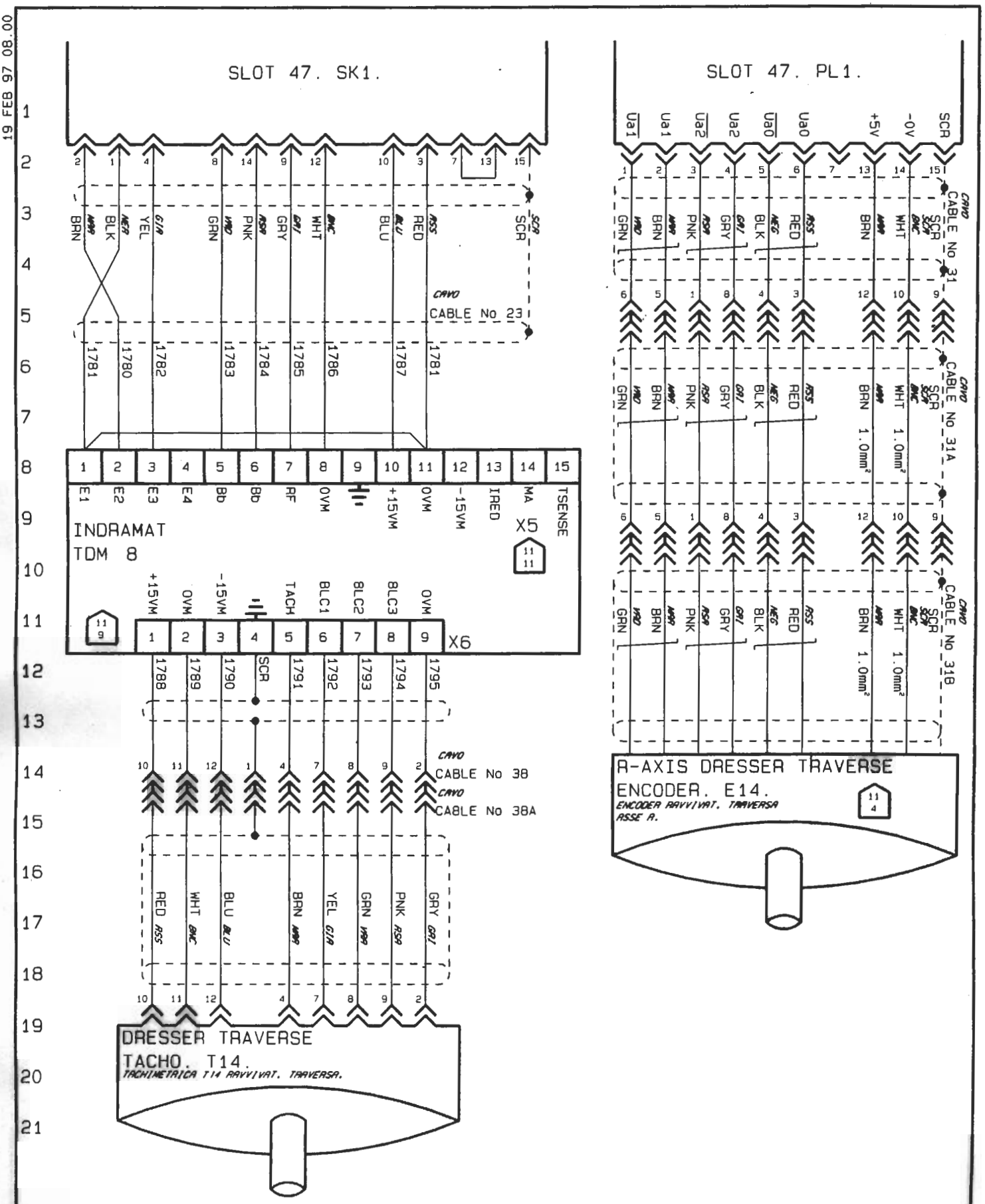

| | | |

19 FEB 97 08.00

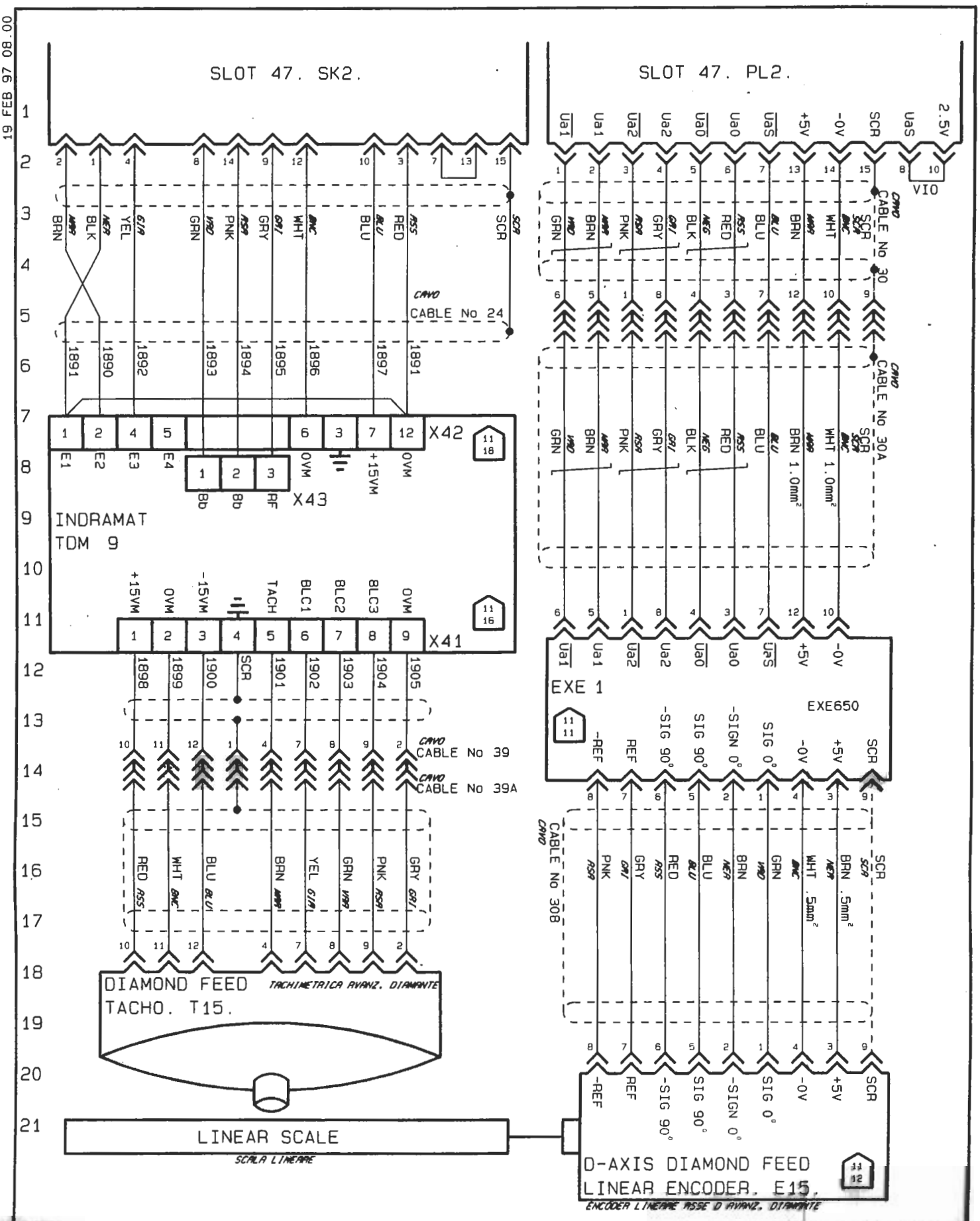

| | | |

19 FEB 97 08.00

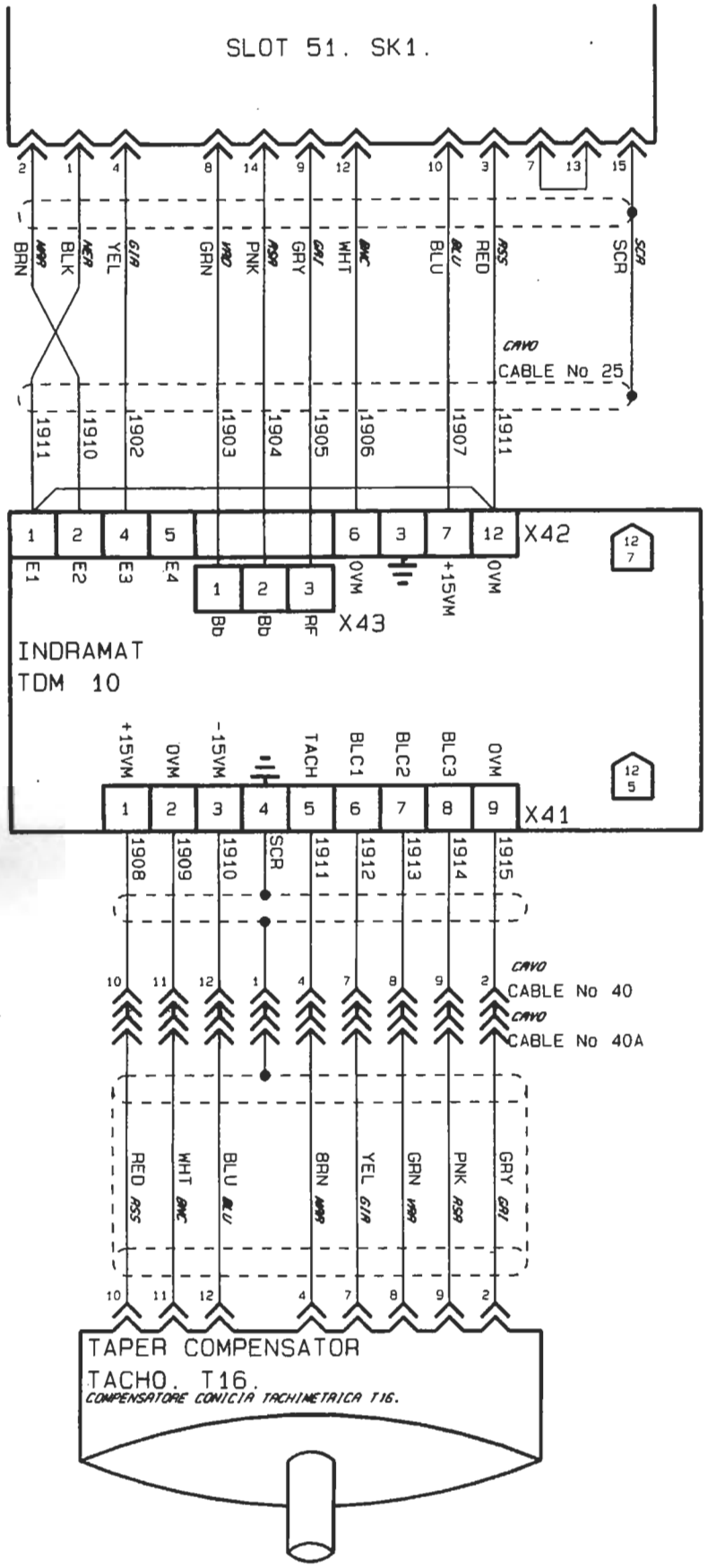

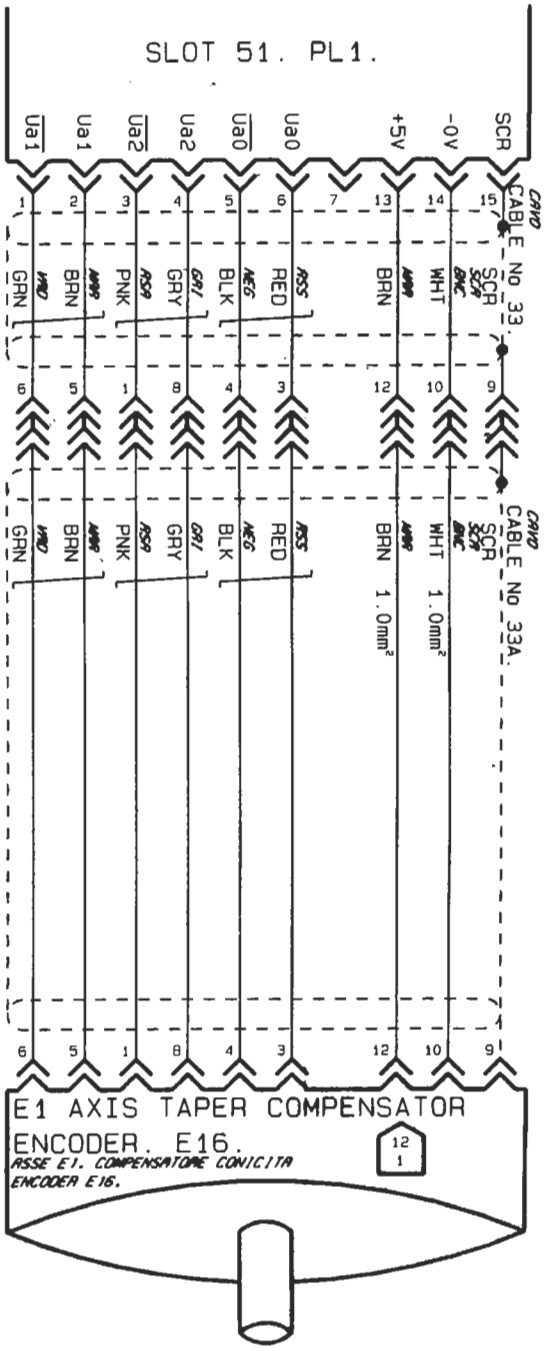

| | | |

19 FEB 97 08.00

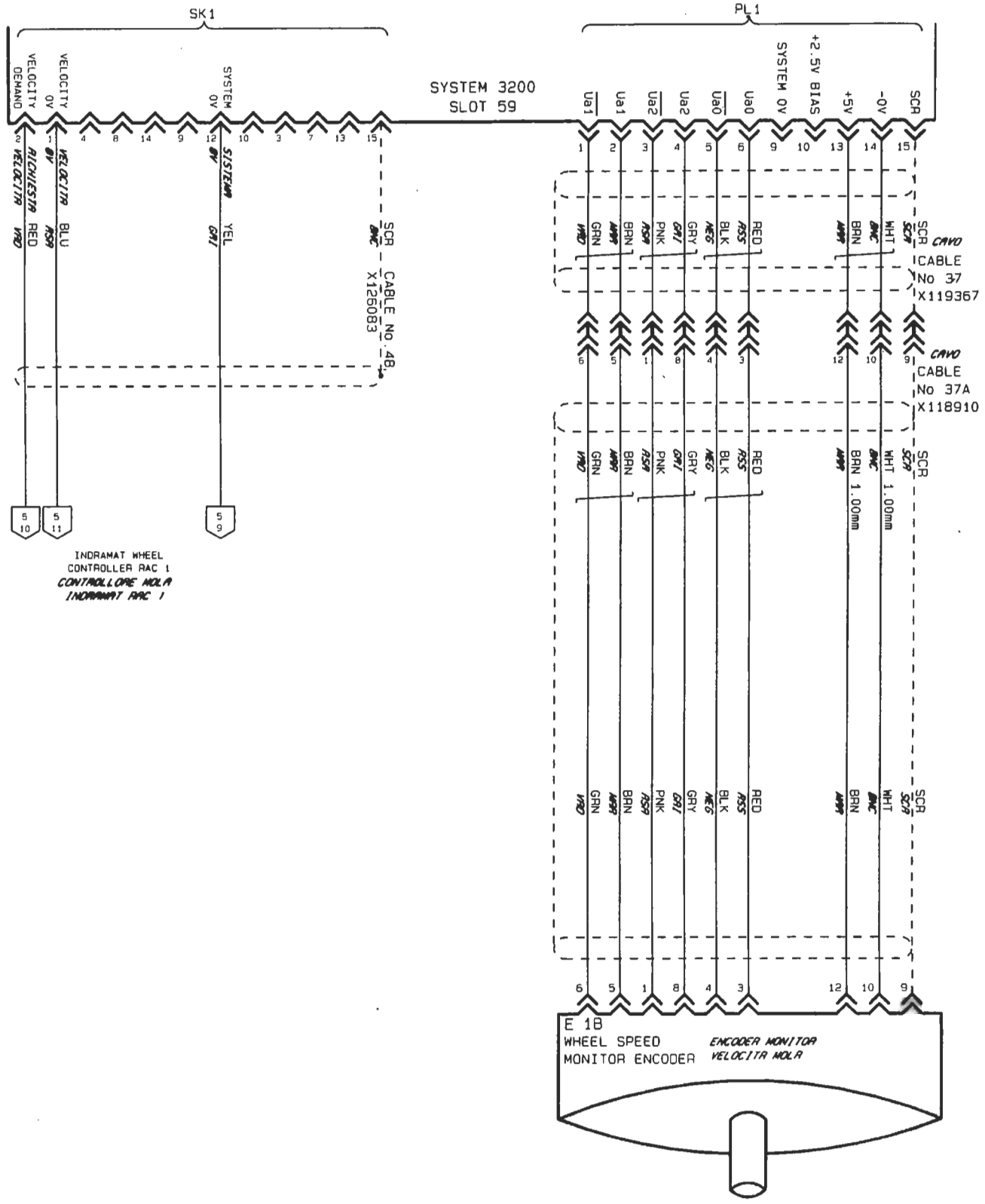

| | | |

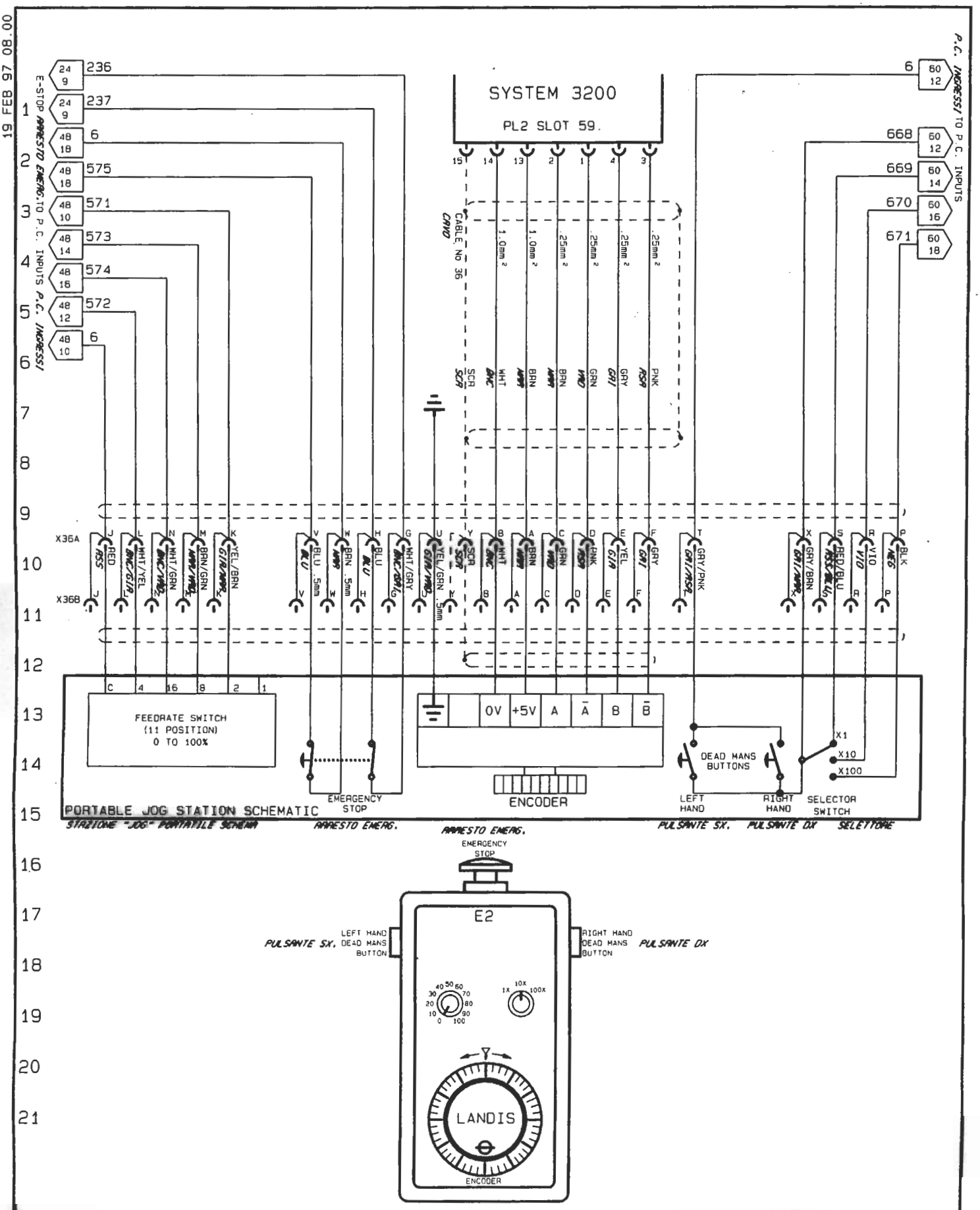

DRAWN ROP																	
CHECKED																	
APPROVED																	
LAYOUT APP'D																	

19 FEB 97 08.00

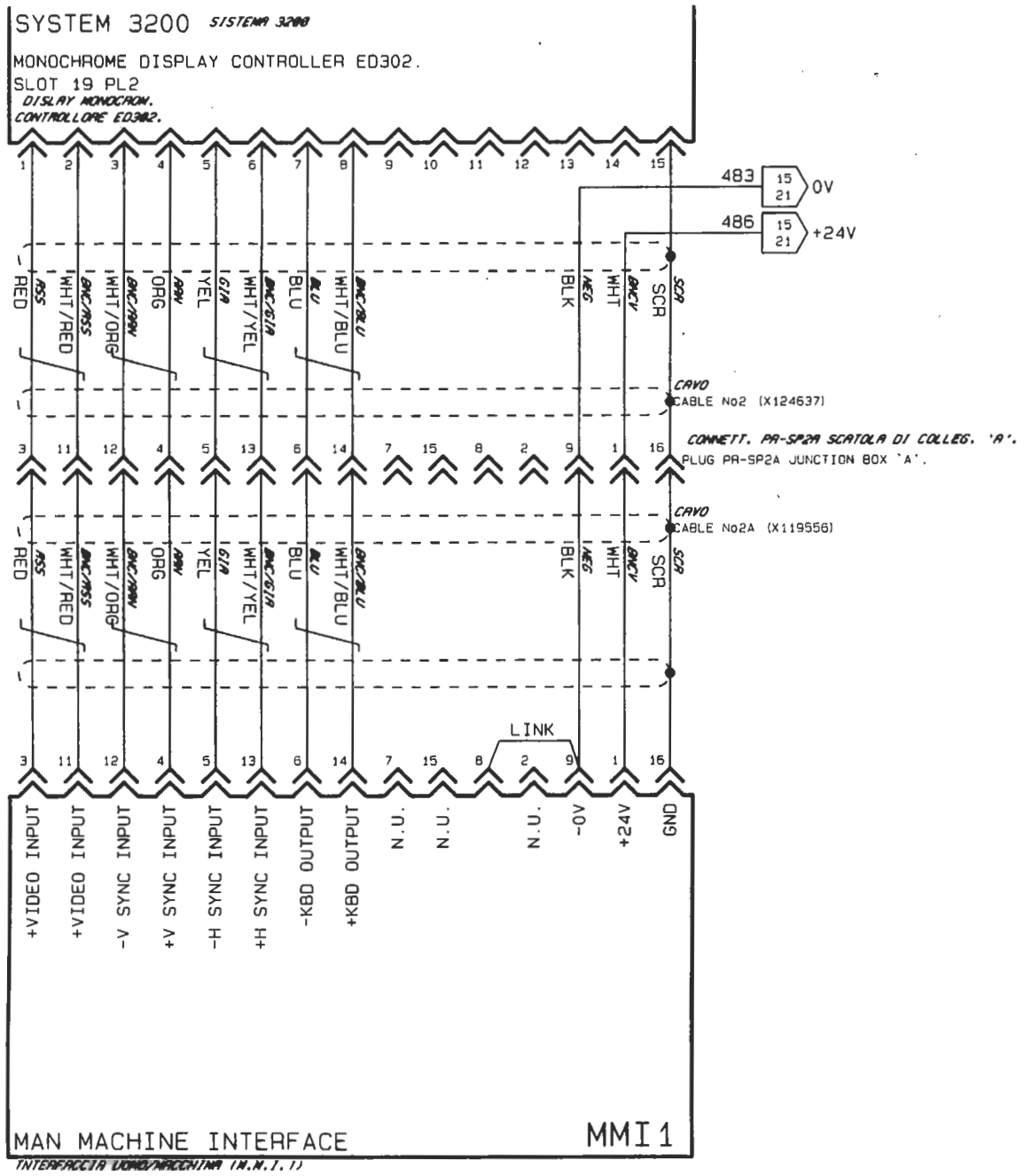

| | | |

N. PARAMETRI PARAMETRI

PARAMETER No.	PARAMETER		
	P	A	M
01	50	2137	4
02	900	8.2	3
03	50	20	1
04	1800	10	5.0
05	50	274	28
06	10	33	140
07	1.00	0	28
08	0.50	0	1700
09	1400	120	1600
10	0.50	240	240
11	0.02	1024	0.4
12	1	9999	10
13	1	9999	0.5
14	0	9999	0.2
15	10	9999	27
16	0	9999	0.35
17	16.6	9999	
18	150	9999	
19	30	9600	
20	1.00	20	
21	0.01		

19 FEB 97 08.00

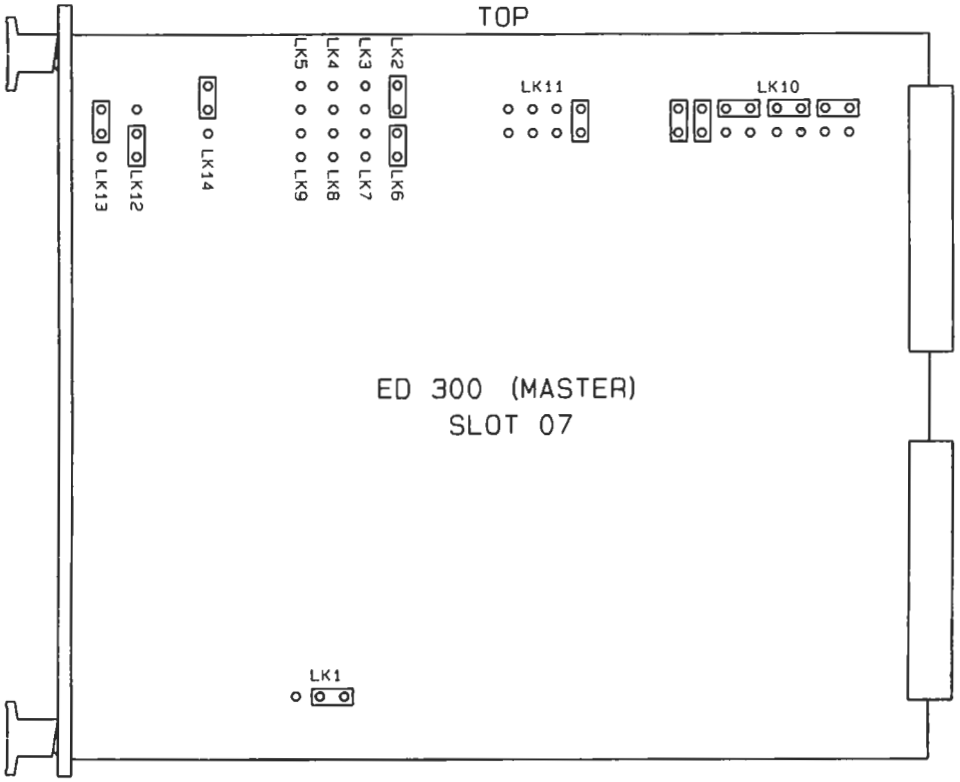

| | | |

19 FEB 97 08.00

LANDIS SYSTEM 3200, ADDRESS SWITCH SETTINGS.

ED305 SCHEDA CONTROLLORE SISTEMA
ED305 SYSTEM CONTROLLER BOARD

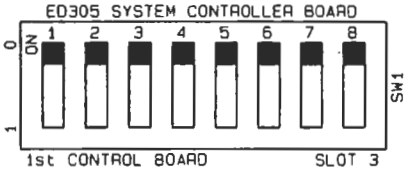

1st CONTROL BOARD SLOT 3
N. 1 CONTROLLORE SISTEMA

ED305 SCHEDA CONTROLLORE SISTEMA
ED305 SYSTEM CONTROLLER BOARD

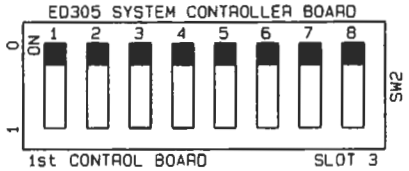

1st CONTROL BOARD SLOT 3
N. 1 CONTROLLORE SISTEMA

ED305 SCHEDA CONTROLLORE SISTEMA
ED305 SYSTEM CONTROLLER BOARD

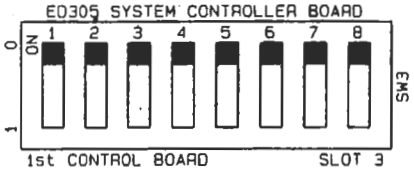

1st CONTROL BOARD SLOT 3
N. 1 CONTROLLORE SISTEMA

ED301 SCHEDA MEMORIA NON VOLATILE
ED301 NON-VOLATILE MEMORY BOARD

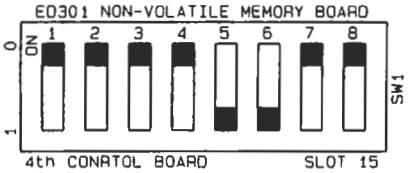

4th CONRTOL BOARD SLOT 15
4 CONTROLLORE SCHEDA

ED301 SCHEDA MEMORIA NON VOLATILE
ED301 NON-VOLATILE MEMORY BOARD

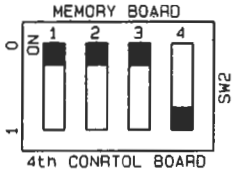

4th CONRTOL BOARD SLOT 15
4 CONTROLLORE SCHEDA

ED301 SCHEDA MEMORIA NON VOLATILE
ED301 NON-VOLATILE MEMORY BOARD

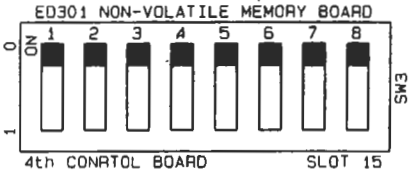

4th CONRTOL BOARD SLOT 15
4 CONTROLLORE SCHEDA

ED302 SCHEDA CONTROLLO DISPLAY MONO
ED302 MONO DISPLAY CONTROLLER BOARD

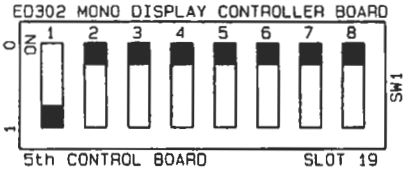

5th CONTROL BOARD SLOT 19
5 CONTROLLORE SCHEDA

ED302 SCHEDA CONTROLLO DISPLAY MONO
ED302 MONO DISPLAY CONTROLLER BOARD

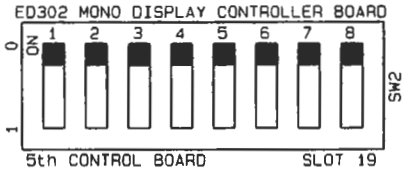

5th CONTROL BOARD SLOT 19
5 CONTROLLORE SCHEDA

I/O PARALLELA ED304 (0)
ED304 PARALLEL I/O (0)

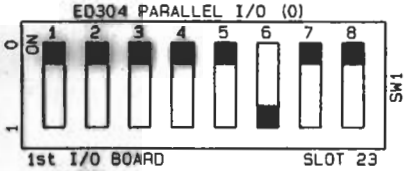

1st I/O BOARD SLOT 23
1 SCHEDA I/O

I/O PARALLELA ED304 (1)
ED304 PARALLEL I/O (1)

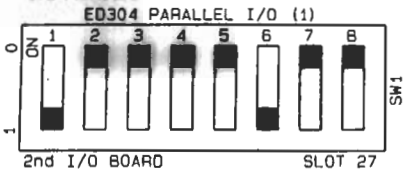

2nd I/O BOARD SLOT 27
2 SCHEDA I/O

I/O PARALLELA ED304 (2)
ED304 PARALLEL I/O (2)

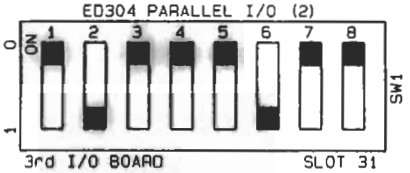

3rd I/O BOARD SLOT 31
3 SCHEDA I/O

INTERR. SCHEDA I/O PARALLELI ED304
ED304 PARALLEL I/O BOARD SWITCHES

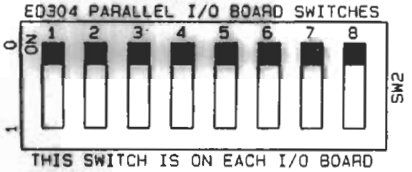

THIS SWITCH IS ON EACH I/O BOARD
QUESTI INTERR. SONO ON SU OGNI SCHEDA I/O

NOTE:
SET LINKS ON EACH SERVO BOARD (ED303) AS SHOWN.

CUIUSO

CUIUSO

APERTO

APERTO

NOTA:
IMPOSTARE I PONTIC. SU OGNI SCHEDA (ED303) COME MOSTRATO.

INTERFACCIA SERVO ED303 (0)
ED303 SERVO INTERFACE (0)

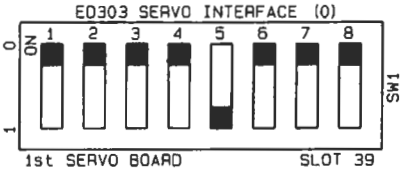

1st SERVO BOARD SLOT 39
1 SCHEDA SERVO

INTERFACCIA SERVO ED303 (1)
ED303 SERVO INTERFACE (1)

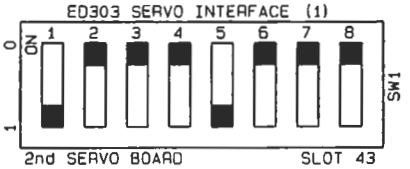

2nd SERVO BOARD SLOT 43
2 SCHEDA SERVO

INTERFACCIA SERVO ED303 (2)
ED303 SERVO INTERFACE (2)

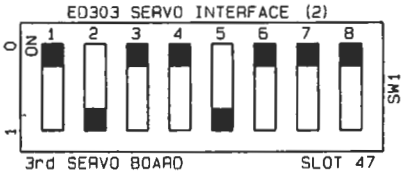

3rd SERVO BOARD SLOT 47
3 SCHEDA SERVO

INTERFACCIA SERVO ED303 (3)
ED303 SERVO INTERFACE (3)

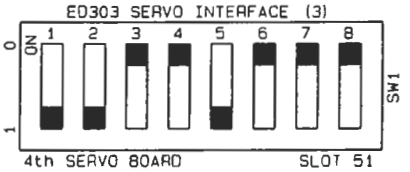

4th SERVO BOARD SLOT 51
4 SCHEDA SERVO

INTERFACCIA SERVO ED303 (4)
ED303 SERVO INTERFACE (4)

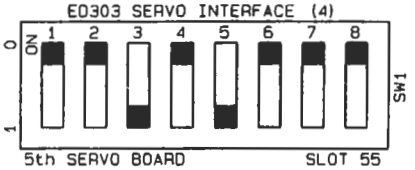

5th SERVO BOARD SLOT 55
5 SCHEDA SERVO

INTERFACCIA SERVO ED303 (5)
ED303 SERVO INTERFACE (5)

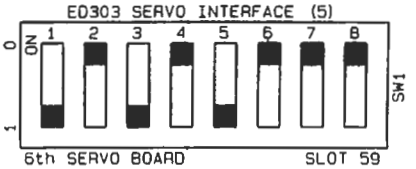

6th SERVO BOARD SLOT 59
6 SCHEDA SERVO

INTERRUTT. INTERFACCIA SERVO ED303
ED303 SERVO INTERFACE SWITCHES

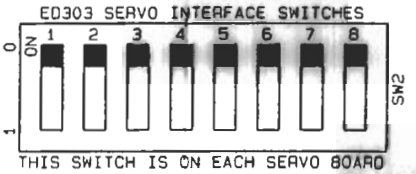

THIS SWITCH IS ON EACH SERVO BOARD
QUESTI INTERRUTT. SONO ON SU OGNI SCHEDA SERVO

| | | |

NUMERAZIONE FILI ELETTRICI FUORI SEQUENZA

OUT OF SEQUENCE WIRE NUMBERS

339	73-8
340	40-1
341	5-3
342	25-13
343	25-13
344	25-13
345	25-13
346	25-13
347	25-15
348	25-20
349	25-21
350	25-21
351	25-21
352	25-21
353	25-21
354	25-21
355	22-16

LAST WIRE USED: 355.

ULTIMO FILO USATO. 355

RELE' FUORI SEQUENZA

OUT OF SEQUENCE RELAYS

NAME	DATE	C.I.
KE	17-02-97	W/O 97032
KE	17-02-97	W/O 96950
KE	17-02-97	W/O 96607
KE	17-02-97	W/O 97645
KE	17-02-97	W/O 97662
KE	17-02-97	W/O 97287
KE	17-02-97	W/O 97833
KE	17-02-97	W/O 95858

CHANGES

DRAWN: RDP
CHECKED:
APPROVED:
LAYOUT APP'D:

TITLE: OUT OF SEQUENCE WIRE AND RELAY NUMBERS.

TABELLA DEI CAVI "FUORI SEQUENZA" RELE'

M/C No 318-89

FMA

EY01529

MICROFILM:
REF. DRG: –
SHEET: 93
SHEETS: 150

19 FEB 97 08.00

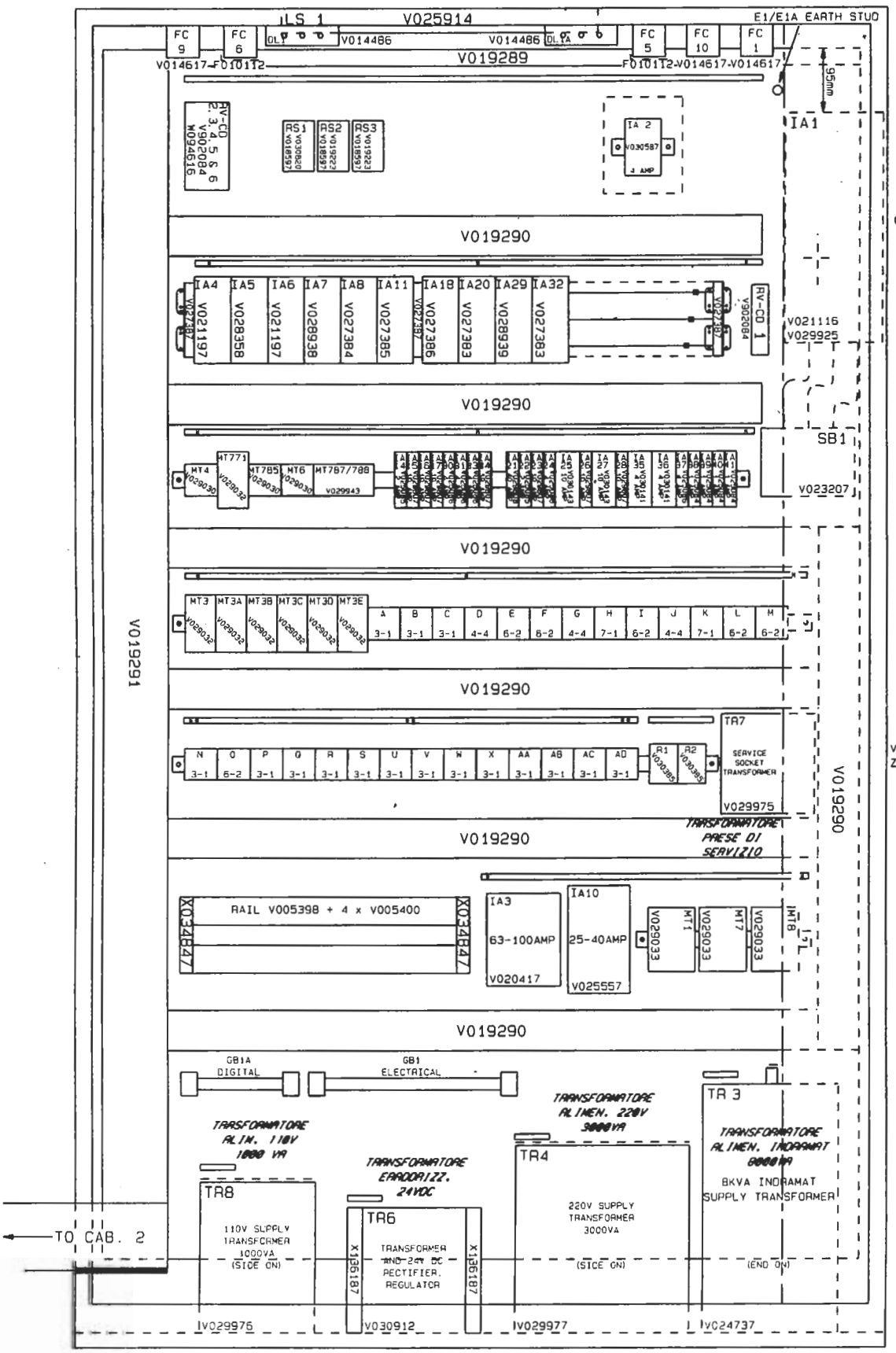

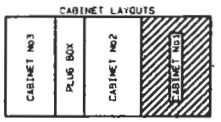

ASSEMBLY NOTES:

BUILD AND WIRE TO SPECIFICATION EY01536.

FIT TRUNKING, F002233 IN THE CABINET ROOF FOR WIRING LIVE BEFORE THE MAIN ISOLATOR.

COVER ALL ITEMS LIVE BEFORE THE MAIN ISOLATOR, ALSO FC5, FC6 & THE TRANSFORMER TOPS AS SHOWN WITH POLYCARBONATE.

MOUNT MAIN BREAKER IA1 ON PLATE X126181.

MOUNT ALL BUSBAR CIRCUIT BREAKER PARTS ON TUFNOL 1/16" SHEET PART No K030191.
3 OFF V027387 BUSBAR SUPPORT.
2 OFF V027388 BUSBAR ENDPLATE.
3 OFF V027389 BUSBAR 12 x 5mm.
1 OFF V029185 BUSBAR SHROUD.
3 OFF V027390 BUSBAR TERM.
10 OFF V027391 BUSBAR ADAPTOR.
COVER 3 PHASE TERMINALS WITH POLYCARBONATE AS SHOWN.

BACKPLATE W125042

SUPPRESSOR 10 OFF V020422
SUPPRESSOR 16 OFF V029004
TO BE FITTED ON RELAYS:
4-4 AND 6-2.

MOUNT SELECTOR SWITCH SL1 IN THE CENTRAL POSITION ON THE R/H DOOR: V026025+V020743.

MOUNT LEGEND PLATES:
Z126300 ON R/H DOOR,
BENEATH THE LIGHTNING FLASH.

FIT WARNING LABLES
V025882 2 OFF AND V025883 4 OFF.
Z112603 1 OFF AND V025975 1 OFF.

FIT DRAWING POCKET X115298,
BEHIND R/H DOOR.

IDENTIFY COMPONENTS USING UNILABLE MARKERS AS SHOWN.

MOUNT TRANSFORMERS ON:
RAILS Y125460 8 OFF.
NUTS V024084 20 OFF.

MOUNT EXIT TRUNKING ON SUPPORT PLATE: Y121199.

EARTH BUSBAR V028779 1 OFF.
SUPPORT BRACKET V020465 4 OFF.

MOUNT DIN RAIL EQUIPMENT ON DIN RAIL V017977.

* FIT PILLAR'S Z127762 11 OFF.
** FIT PILLAR'S Z127763 3 OFF.

RELAY'S 16 OFF 3-1 V029001
RELAY'S 06 OFF 6-2 V029002
RELAY'S 03 OFF 4-4 V029003
RELAY'S 02 OFF 7-1 V031990

MOUNT FC1 FC9 & FC10 ON PLATE Z125965 3 OFF.

TERMINAL COVERS FOR TR3:
1 OFF Z122318 AND
2 OFF V028215.

MOUNT TR6 ON BRACKETS
X136187 2 OFF.

996318500

DRAWN RDP																	
CHECKED																	
APPROVED																	
LAYOUT APP'D																	
CHANGES																	
NAME	KE	KE	KE	KE	KE	KE	KE	KE	KE	KE	KE	KE	KE	KE	KE	KE	KE
DATE	17-02-97	17-02-97	17-02-97	17-02-97	17-02-97	17-02-97	17-02-97	17-02-97	17-02-97	17-02-97	17-02-97	17-02-97	17-02-97	17-02-97	17-02-97	17-02-97	17-02-97
C.I.	W/O 95858	W/O 97033	W/O 97287	W/O 97662	W/O 97645	W/O 96507	W/O 96950	W/O 97032									

TITLE

CABINET No1
LAYOUT.

DISPOSIZIONE DEL PANNELLO DELL' ARMADIO N. 1.

M/C No 318-89

FMA

EY01529

MICROFILM

REF. DRG –

SHEET 94

SHEETS 150

19 FEB 97 08.00

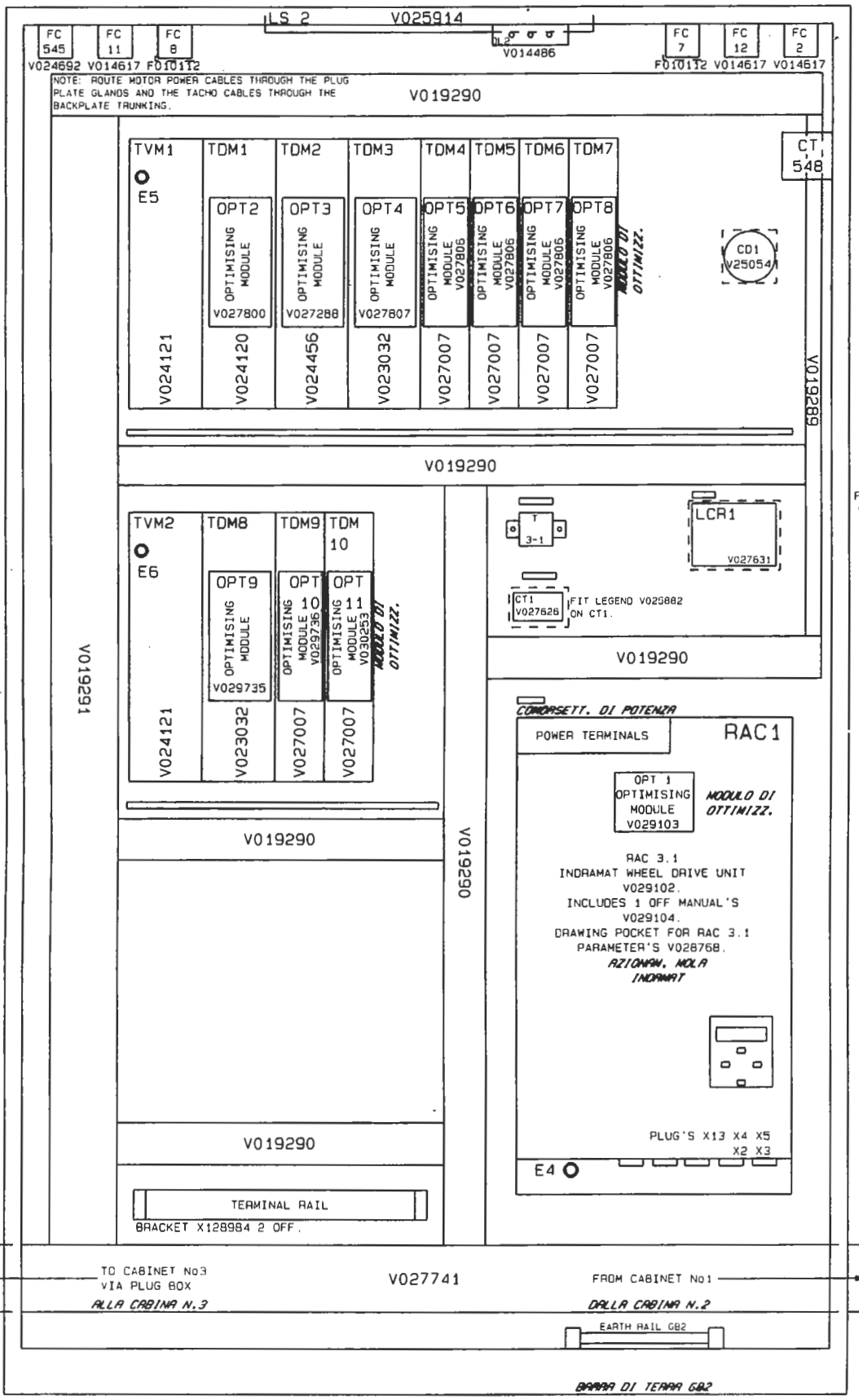

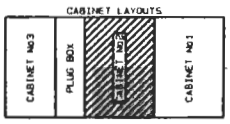

ASSEMBLY NOTES:

COVER SWITCHES FC7 & FC8 WITH POLYCARBONATE AS SHOWN.

MOUNT FC2 FC11 & FC12 ON PLATE Z125965 3 OFF.

CT 548 V027405 AND MOUNT ON BRACKET Y125890.

FIT TRUNKING, F002233 IN THE CABINET ROOF FOR WIRING LIVE BEFORE THE MAIN ISOLATOR.

IDENTIFY COMPONENTS USING UNILABLE MARKERS AS SHOWN.

FIT THE FOLLOWING WARNING LABLES: V025882 2 OFF AND V025883 2 OFF.

MOUNT SELECTOR SWITCH SL2, IN THE CENTRAL POSITION ON THE R/H DOOR: V026025+V020743.

FIT AIR CONDITIONER, ACU 1 V026278+V026279 ON THE L/H DOOR.

MOUNT DIN RAIL EQUIPMENT ON RAIL V017977.

RELAY (T) V029001.

EARTH BUS BAR V028779 1 OFF. SUPPORT BRACKET V020465 2 OFF.

INDRAMAT MANUALS:
1 OFF V023308.
3 OFF V028426.
3 OFF V028427.
3 OFF V029573.

NOTE:
PLEASE MAKE POLYCARBONATE COVERS FOR CD1, CT1 & LCR1 WITH A LIP ON ALL SIDES.

MAKE UP BRADY MARKERS FOR EACH INDRAMAT CONTROLLER:
'X' AXIS FOR TDM1
'Z' AXIS FOR TDM2
'S' AXIS FOR TDM3
'U1' AXIS FOR TDM4
'V1' AXIS FOR TDM5
'U2' AXIS FOR TDM6
'V2' AXIS FOR TDM7
'A' AXIS FOR TDM8
'D' AXIS FOR TDM9
'E1' AXIS FOR TDM10
AND FIT ON THE PERSPEX COVER OF EACH UNIT.

996318600

DRAWN ADP							KE	KE	KE	KE	KE	KE	KE	KE	NAME	CHANGES	TITLE
CHECKED							17-02-97	17-02-97	17-02-97	17-02-97	17-02-97	17-02-97	17-02-97	17-02-97	DATE		CABINET No 2 LAYOUT.
APPROVED							K/O 95868	K/O 97882	K/O 97887	K/O 97862	K/O 97845	K/O 96607	K/O 96560	K/O 97032	C.I.		DISPOSIZIONE DEL PANNELLO DELL' ARMADIO N.2.
LAYOUT APP'D																	M/C No 318-89

FMI

EY01529

MICROFILM

REF.DRG -

SHEET 95

SHEETS 150

19 FEB 97 08.00

CABINA N.3 LATO DX.

CABINET No3 L/H SIDE.

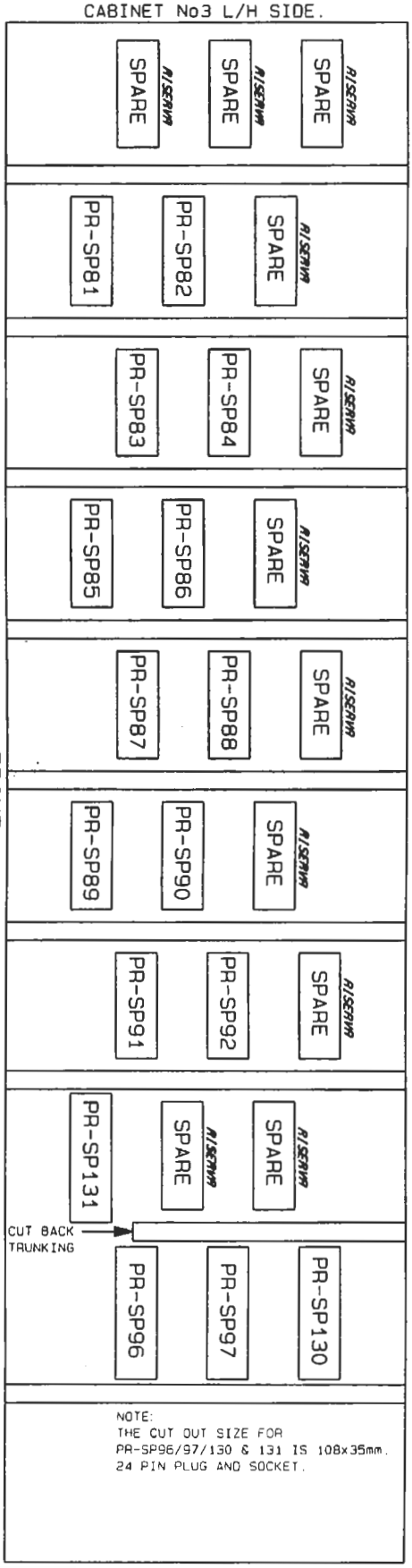

NOTE:
THE CUT OUT SIZE FOR
PR-SP96/97/130 & 131 IS 108x35mm.
24 PIN PLUG AND SOCKET.

DISPOS. CABINE

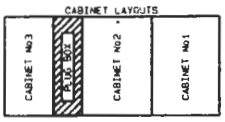

TRUNKING V027771
9 OFF.
BASE V015594
23 OFF.
F/INSERT V025713
23 OFF.
CODE PINS V015610
54 OFF.
BLANKING PLATE Z077418
27 OFF.
F/INSERT (24 PIN) V015059
3 OFF.
M/INSERT (24 PIN) V015058
1 OFF.
BASE (24 PIN) V015056
4 OFF.

CABINA N.2 LATO SX.

CABINET No2 R/H SIDE.

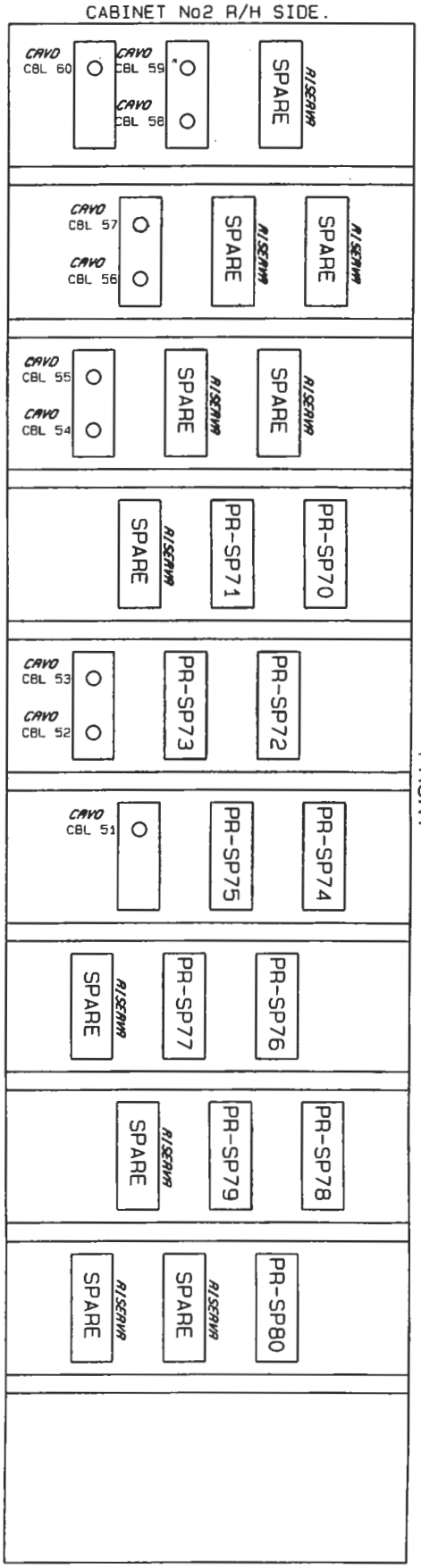

| | | |

19 FEB 97 08.00

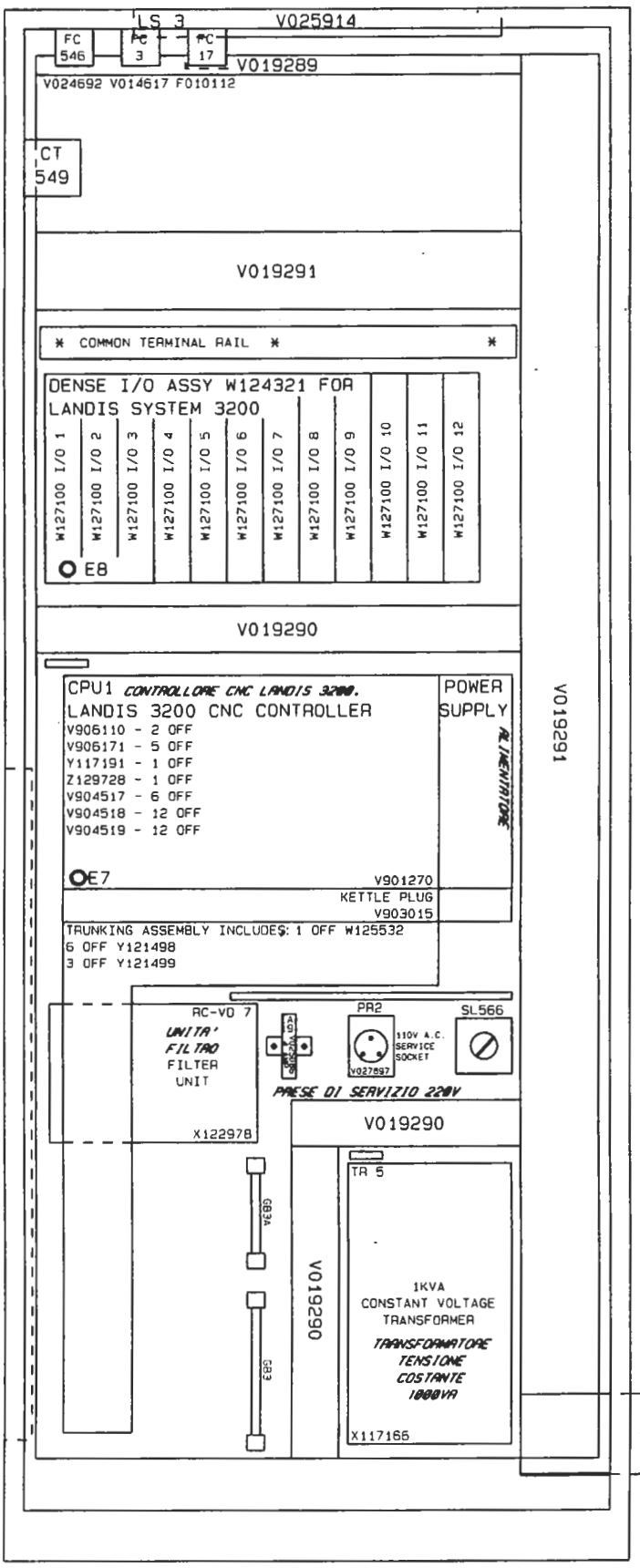

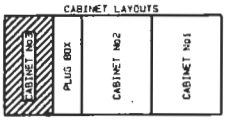

ASSEMBLY NOTES:

COVER SWITCH FC17 WITH POLYCARBONATE AS SHOWN.

MOUNT FC3 ON PLATE Z125965

CT 549 V027405 AND MOUNT ON BRACKET Y125890.

BACKPLATE W125043.

FIT TRUNKING, F002233 IN THE CABINET ROOF FOR WIRING LIVE BEFORE THE MAIN ISOLATOR.

* FIT PILLAR'S Z120425 3 OFF.

IDENTIFY COMPONENTS USING UNILABLE MARKERS AS SHOWN.

FIT THE FOLLOWING WARNING LABLES: V025882 1 OFF AND V025883 2 OFF.

MOUNT CPU1 & DENSE I/O ON PILLAR'S V028562 12 OFF.

MOUNT SELECTOR SWITCH SL3, IN THE CENTRAL POSITION ON THE R/H DOOR: V026025+V020743.

SL 566= V023296+V020743 ALSO V012323 & V020754.

FIT AIR CONDITIONER, ACU 2 V026278+V026279 TO THE LEFT HAND DOOR.

I/O MODULES: V906144 192 OFF AND V906145 96 OFF. V904518 2 OFF SCREW, V904519 2 OFF SLEEVE, V028621 1 OFF PANEL.

FIT 1 OFF TRUNKING V028569 AND 3 OFF COVER JOINT'S V028568.

MOUNT DIN RAIL EQUIPMENT ON RAIL V017977.

EARTH BUSBAR V028779 1 OFF. SUPPORT BRACKET V020465 4 OFF.

TO CABINET No2 VIA PLUG BOX

DALLA CABINA N.2

SUPPORT TRUNKING ON BRACKET Y121199.

996318800

DRAWN																	
RDP																	
CHECKED																	
APPROVED																	
LAYOUT APP'D																	
NAME	KE	KE	KE	KE	KE	KE	KE	KE	KE	KE	KE	KE	KE	KE	KE	KE	KE
DATE	17-02-97	17-02-97	17-02-97	17-02-97	17-02-97	17-02-97	17-02-97	17-02-97	17-02-97	17-02-97	17-02-97	17-02-97	17-02-97	17-02-97	17-02-97	17-02-97	17-02-97
C.I.	M/O 96288	M/O 97683	M/O 97662	M/O 97662	M/O 97662	M/O 97645	M/O 96697	M/O 96690	M/O 97632								

CHANGES

TITLE

CABINET No 3 LAYOUT.

DISPOSIZIONE DEL PANNELLO DELL' ARMADIO N.3.

M/C No 318-89

FMA

EY01529

MICROFILM

REF DRG –

SHEET 97

SHEETS 150

19 FEB 97 08.00

CABINA N.1	CABINA N.2	CABINA N.3	CABINA N.3
CABINET No1	CABINET No2	CABINET No3	CABINET No3
171	6	5	9
178	341	5	9
203	71	5	9
213	71	5	9
234	15	5	9
235	552	5	10
237	553	5	10
252	554	5	10
253	555	5	10
254	. .	5	10
255	. .	5	10
256	5	5	10
257	5	5	10
258	15	5	10
259	249	5	10
308	250	5	10
309	. .	5	10
5	. .	5	10
5	848	7	10
5	849	7	10
5	850	7	10
5	851	7	10
5	. .	7	16
5	5	9	16
5	5	9	16
5	5	9	16
5	6	9	16
6	6	9	16
6	6	9	16
6	6	9	16
6	6	9	16
6	6	9	16
6	6	9	16
6	15	9	16
6	15	9	16
6	15	9	16
6	15	9	16
6	15	9	16
6	15	9	16
6	15	9	166
6	15	9	166
6	3	9	166
15	3	9	166
15	3	9	166
15	3	9	166
15	4	9	166
. .	4	9	168
. .	4	9	168
. .	4	9	339
. .	125	9	339
. .	125	9	768
. .	125	9	768
. .	131	9	
. .	131	9	
. .	131	9	
. .	131	9	
. .	132	9	
. .	132	9	
. .	132	9	
. .	. .	9	
. .	. .	9	
		9	
		9	
		9	
		9	
		9	
		9	
		9	
	ACU1	9	ACU2
	4	9	4
	92	9	93

PUNT TEST — TEST POINTS

CONNI/ ALLA MACCHINA — COMMONS TO THE MACHINE VIA PLUG/SOCKET PR-SP72

CONTROLLORE INDRAWAT ARC1 — RAC1 CONTROLLER

SISTEMA 3200 CAL/BRO POST PROCESS ESO — SYSTEM 3200 / POST PROCESS

DRAWN	RDP
CHECKED	
APPROVED	
LAYOUT APP'D	

CHANGES	NAME	DATE	C.I.
	KE	17-02-97	W/O 97032
	KE	17-02-97	W/O 96950
	KE	17-02-97	W/O 96607
	KE	17-02-97	W/O 97645
	KE	17-02-97	W/O 97662
	KE	17-02-97	W/O 97287
	KE	17-02-97	W/O 97033
	KE	17-02-97	W/O 96898

TITLE

CABINET TERMINAL LAYOUT.

MORSETTIERA CABINE

M/C No 318-89

FMA

EY01529

MICROFILM

REF. DRG

SHEET 98

SHEETS 150

19 FEB 97 08.00

MACHINE CABLES

CABLE No	DRAWING No	DESCRIPTION *ENGLISH*	LABEL TYPE	A54 LENGTH ON MACHINE	B54 LENGTH IN CABINET	054 TRUNKING END TO + M/C DEVICE	054 TRUNKING LENGTH	054 TRUNKING + END TO = CAB DEVICE	054 LENGTH CABINET TO M/C
01A	X129881	RAC1 CABINET No2 TO THE MACHINE JUNCTION BOX `A'	B	-	-	2.5M	7.0M	5.5M	15.0M
51	X129900	TDM8 CABINET No2 TO THE MACHINE JUNCTION BOX `A'	B	-	-	2.5M	7.0M	2.5M	12.0M
52	X129901	TDM9 CABINET No2 TO THE MACHINE JUNCTION BOX `A'	B	-	-	2.5M	7.0M	2.5M	12.0M
53	X129902	TDM10 CABINET No2 TO THE MACHINE JUNCTION BOX `A'	B	-	-	2.5M	7.0M	2.5M	12.0M
54	X129896	TDM4 CABINET No2 TO THE MACHINE JUNCTION BOX `A'	B	-	-	2.5M	7.0M	2.5M	12.0M
55	X129897	TDM5 CABINET No2 TO THE MACHINE JUNCTION BOX `A'	B	-	-	2.5M	7.0M	2.5M	12.0M
56	X129898	TDM6 CABINET No2 TO THE MACHINE JUNCTION BOX `A'	B	-	-	2.5M	7.0M	2.5M	12.0M
57	X129899	TDM7 CABINET No2 TO THE MACHINE JUNCTION BOX `A'	B	-	-	2.5M	7.0M	2.5M	12.0M
58	X129895	TDM3 CABINET No2 TO THE MACHINE JUNCTION BOX `A'	B	-	-	2.5M	7.0M	2.5M	12.0M
59	X129912	TDM2 CABINET No2 TO THE MACHINE JUNCTION BOX `A'	B	-	-	2.5M	7.0M	2.5M	12.0M
60	X129887	TDM1 CABINET No2 TO THE MACHINE JUNCTION BOX `A'	B	-	-	2.5M	7.0M	2.5M	12.0M
-	-	-		-	-	-	-	-	-
70	X129869	CABINET No2 TO THE MACHINE JUNCTION BOX `A'	B	-	-	2.5M	7.0M	2.5M	12.0M
71	X129834	CABINET No2 TO THE MACHINE JUNCTION BOX `A'	B	-	-	2.5M	7.0M	2.5M	12.0M
72	X129835	CABINET No2 TO THE MACHINE JUNCTION BOX `A'	B	-	-	2.5M	7.0M	2.5M	12.0M
73	X129836	CABINET No2 TO THE MACHINE JUNCTION BOX `A'	B	-	-	2.5M	7.0M	2.5M	12.0M
74	X129837	CABINET No2 TO THE MACHINE JUNCTION BOX `A'	B	-	-	2.5M	7.0M	2.5M	12.0M
75	X129838	CABINET No2 TO THE MACHINE JUNCTION BOX `A'	B	-	-	2.5M	7.0M	2.5M	12.0M
76	X129833	CABINET No2 TO THE MACHINE JUNCTION BOX `A'	B	-	-	2.5M	7.0M	2.5M	12.0M
77	X129834	CABINET No2 TO THE MACHINE JUNCTION BOX `A'	B	-	-	2.5M	7.0M	2.5M	12.0M
78	X123539	CABINET No2 TO THE MACHINE JUNCTION BOX `A'	B	-	-	2.5M	7.0M	2.5M	12.0M
79	X129873	CABINET No2 TO THE HYDRAULIC PANEL BOX `G'	B	-	-	2.5M	9.5M	1.5M	13.5M
80	X129838	CABINET No2 TO THE HYDRAULIC PANEL BOX `G'	B	-	-	2.5M	9.5M	1.5M	13.5M
81	X129845	CABINET No3 TO THE HYDRAULIC PANEL BOX `G'	B	-	-	2.5M	9.5M	1.5M	13.5M
82	X129846	CABINET No3 TO THE MACHINE JUNCTION BOX `A'	B	-	-	2.5M	7.0M	2.5M	12.0M
83	X129847	CABINET No3 TO THE MACHINE JUNCTION BOX `A'	B	-	-	2.5M	7.0M	2.5M	12.0M
84	X129848	CABINET No3 TO THE MACHINE JUNCTION BOX `A'	B	-	-	2.5M	7.0M	2.5M	12.0M
85	X129849	CABINET No3 TO THE MACHINE JUNCTION BOX `A'	B	-	-	2.5M	7.0M	2.5M	12.0M
86	X129850	CABINET No3 TO THE MACHINE JUNCTION BOX `A'	B	-	-	2.5M	7.0M	2.5M	12.0M
87	X129845	CABINET No3 TO THE MACHINE JUNCTION BOX `A'	B	-	-	2.5M	7.0M	2.5M	12.0M
88	X129846	CABINET No3 TO THE MACHINE JUNCTION BOX `A'	B	-	-	2.5M	7.0M	2.5M	12.0M
89	X129847	CABINET No3 TO THE MACHINE JUNCTION BOX `A'	B	-	-	2.5M	7.0M	2.5M	12.0M
90	X129848	CABINET No3 TO THE MACHINE JUNCTION BOX `A'	B	-	-	2.5M	7.0M	2.5M	12.0M
91	X129849	CABINET No3 TO THE MACHINE JUNCTION BOX `A'	B	-	-	2.5M	7.0M	2.5M	12.0M
92	X129850	CABINET No3 TO THE MACHINE JUNCTION BOX `A'	B	-	-	2.5M	7.0M	2.5M	12.0M
-	-	-		-	-	-	-	-	-
-	-	-		-	-	-	-	-	-
100	X129927	MACHINE JUNCTION BOX `A' TO CONSOLE BOX `H'	B	7.0M	-	-	-	-	-
101	X129928	MACHINE JUNCTION BOX `A' TO CONSOLE BOX `H'	B	7.0M	-	-	-	-	-
102	X129929	MACHINE JUNCTION BOX `A' TO CONSOLE BOX `H'	B	7.0M	-	-	-	-	-
103	X129930	MACHINE JUNCTION BOX `A' TO CONSOLE BOX `H'	B	7.0M	-	-	-	-	-
104	X129931	MACHINE JUNCTION BOX `A' TO CONSOLE BOX `H'	B	7.0M	-	-	-	-	-
105	X129932	MACHINE JUNCTION BOX `A' TO CONSOLE BOX `H'	B	7.0M	-	-	-	-	-
106	X129927	MACHINE JUNCTION BOX `A' TO CONSOLE BOX `H'	B	7.0M	-	-	-	-	-

NOTE: (LABEL TYPE).
`P' PARTEX (ONLY USED ON CUSTOMER REQUEST)
`M' MURRELEKTRONIK.
`B' BRADY.

DRAWN ADP					KE	KE	KE	KE	KE	KE	KE	KE	NAME	CHANGES	TITLE OILFLEX CABLE LENGTHS. *CAVI MACCHINA LUNGHEZZA*
CHECKED					17-02-97	17-02-97	17-02-97	17-02-97	17-02-97	17-02-97	17-02-97	17-02-97	DATE		
APPROVED					A/O 97646	A/O 97643	A/O 97287	A/O 97662	A/O 97645	A/O 96607	A/O 96560	A/O 97032	C.I.		
LAYOUT APP'D															M/C No 318-89

FMA

EY01529

MICROFILM

REF.DRG -

SHEET 99

SHEETS 150

19 FEB 97 08.00

		ITALIAN	BS4 LUNGHEZZA SULLA M/C	BS4 LUNGHEZZA SULLA CABINA	BS4			
					DA FINE CANAL.A DISP.M/C +	LUNGHEZZA CANAL.	FINE CANAL A + DISP.CAB.A =	LUNGH. DA CABINA M/C
01A	X129881	DA ARC1 CABINA N.2 ALLA SCAT. DI GIUNZIONE M/C 'A'.	-	-	2.5M	7.0M	5.5M	15.0M
51	X129900	DA TOM8 CABINA N.2 ALLA SCATOLA DI GIUNZIONE M/C 'A'.	-	-	2.5M	7.0M	2.5M	12.0M
52	X129901	DA TOM9 CABINA N.2 ALLA SCATOLA DI GIUNZIONE M/C 'A'.	-	-	2.5M	7.0M	2.5M	12.0M
53	X129902	DA TOM10 CABINA N.2 ALLA SCATOLA DI GIUNZIONE M/C 'A'.	-	-	2.5M	7.0M	2.5M	12.0M
54	X129896	DA TOM4 CABINA N.2 ALLA SCATOLA DI GIUNZIONE M/C 'A'.	-	-	2.5M	7.0M	2.5M	12.0M
55	X129897	DA TOM5 CABINA N.2 ALLA SCATOLA DI GIUNZIONE M/C 'A'.	-	-	2.5M	7.0M	2.5M	12.0M
56	X129898	DA TOM6 CABINA N.2 ALLA SCATOLA DI GIUNZIONE M/C 'A'.	-	-	2.5M	7.0M	2.5M	12.0M
57	X129899	DA TOM7 CABINA N.2 ALLA SCATOLA DI GIUNZIONE M/C 'A'.	-	-	2.5M	7.0M	2.5M	12.0M
58	X129895	DA TOM3 CABINA N.2 ALLA SCATOLA DI GIUNZIONE M/C 'A'.	-	-	2.5M	7.0M	2.5M	12.0M
59	X129912	DA TOM2 CABINA N.2 ALLA SCATOLA DI GIUNZIONE M/C 'A'.	-	-	2.5M	7.0M	2.5M	12.0M
60	X129887	DA TOM1 CABINA N.2 ALLA SCATOLA DI GIUNZIONE M/C 'A'.	-	-	2.5M	7.0M	2.5M	12.0M
-	-		-	-	-	-	-	-
70	X129869	DALLA CABINA N.2 ALLA SCATOLA DI GIUNZIONE M/C 'A'.	-	-	2.5M	7.0M	2.5M	12.0M
71	X129834	DALLA CABINA N.2 ALLA SCATOLA DI GIUNZIONE M/C 'A'.	-	-	2.5M	7.0M	2.5M	12.0M
72	X129835	DALLA CABINA N.2 ALLA SCATOLA DI GIUNZIONE M/C 'A'.	-	-	2.5M	7.0M	2.5M	12.0M
73	X129836	DALLA CABINA N.2 ALLA SCATOLA DI GIUNZIONE M/C 'A'.	-	-	2.5M	7.0M	2.5M	12.0M
74	X129837	DALLA CABINA N.2 ALLA SCATOLA DI GIUNZIONE M/C 'A'.	-	-	2.5M	7.0M	2.5M	12.0M
75	X129838	DALLA CABINA N.2 ALLA SCATOLA DI GIUNZIONE M/C 'A'.	-	-	2.5M	7.0M	2.5M	12.0M
76	X129833	DALLA CABINA N.2 ALLA SCATOLA DI GIUNZIONE M/C 'A'.	-	-	2.5M	7.0M	2.5M	12.0M
77	X129834	DALLA CABINA N.2 ALLA SCATOLA DI GIUNZIONE M/C 'A'.	-	-	2.5M	7.0M	2.5M	12.0M
78	X123539	DALLA CABINA N.2 ALLA SCATOLA DI GIUNZIONE M/C 'A'.	-	-	2.5M	7.0M	2.5M	12.0M
79	X129873	DALLA CABINA N.2 ALLA SCATOLA IBRAL. 'G'.	-	-	2.5M	9.5M	1.5M	13.5M
80	X129838	DALLA CABINA N.2 ALLA SCATOLA IBRAL. 'G'.	-	-	2.5M	9.5M	1.5M	13.5M
81	X129845	DALLA CABINA N.3 ALLA SCATOLA IBRAL. 'G'.	-	-	2.5M	9.5M	1.5M	13.5M
82	X129846	DALLA CABINA N.3 ALLA SCATOLA DI GIUNZIONE M/C 'A'.	-	-	2.5M	7.0M	2.5M	12.0M
83	X129847	DALLA CABINA N.3 ALLA SCATOLA DI GIUNZIONE M/C 'A'.	-	-	2.5M	7.0M	2.5M	12.0M
84	X129848	DALLA CABINA N.3 ALLA SCATOLA DI GIUNZIONE M/C 'A'.	-	-	2.5M	7.0M	2.5M	12.0M
85	X129849	DALLA CABINA N.3 ALLA SCATOLA DI GIUNZIONE M/C 'A'.	-	-	2.5M	7.0M	2.5M	12.0M
86	X129850	DALLA CABINA N.3 ALLA SCATOLA DI GIUNZIONE M/C 'A'.	-	-	2.5M	7.0M	2.5M	12.0M
87	X129845	DALLA CABINA N.3 ALLA SCATOLA DI GIUNZIONE M/C 'A'.	-	-	2.5M	7.0M	2.5M	12.0M
88	X129846	DALLA CABINA N.3 ALLA SCATOLA DI GIUNZIONE M/C 'A'.	-	-	2.5M	7.0M	2.5M	12.0M
89	X129847	DALLA CABINA N.3 ALLA SCATOLA DI GIUNZIONE M/C 'A'.	-	-	2.5M	7.0M	2.5M	12.0M
90	X129848	DALLA CABINA N.3 ALLA SCATOLA DI GIUNZIONE M/C 'A'.	-	-	2.5M	7.0M	2.5M	12.0M
91	X129849	DALLA CABINA N.3 ALLA SCATOLA DI GIUNZIONE M/C 'A'.	-	-	2.5M	7.0M	2.5M	12.0M
92	X129850	DALLA CABINA N.3 ALLA SCATOLA DI GIUNZIONE M/C 'A'.	-	-	2.5M	7.0M	2.5M	12.0M
-	-		-	-	-	-	-	-
-	-		-	-	-	-	-	-
100	X129927	DA SCAT. GIUNZIONE 'A' A SCVATOLA COSOLE 'H'.	7.0M	-	-	-	-	-
101	X129928	DA SCAT. GIUNZIONE 'A' A SCVATOLA COSOLE 'H'.	7.0M	-	-	-	-	-
102	X129929	DA SCAT. GIUNZIONE 'A' A SCVATOLA COSOLE 'H'.	7.0M	-	-	-	-	-
103	X129930	DA SCAT. GIUNZIONE 'A' A SCVATOLA COSOLE 'H'.	7.0M	-	-	-	-	-
104	X129931	DA SCAT. GIUNZIONE 'A' A SCVATOLA COSOLE 'H'.	7.0M	-	-	-	-	-
105	X129932	DA SCAT. GIUNZIONE 'A' A SCVATOLA COSOLE 'H'.	7.0M	-	-	-	-	-
106	X129927	DA SCAT. GIUNZIONE 'A' A SCVATOLA COSOLE 'H'.	7.0M	-	-	-	-	-

DRAWN ROP					KE	KE	KE	KE	KE	KE	KE	KE	KE	NAME	TITLE	MICROFILM
CHECKED					17-02-97	17-02-97	17-02-97	17-02-97	17-02-97	17-02-97	17-02-97	17-02-97	17-02-97	DATE	OILFLEX CABLE LENGTHS.	REF.DRG -
APPROVED					K/O 95658	K/O 97833	K/O 97287	K/O 97662	K/O 97645	K/O 96607	K/O 96650	K/O 97032	C.I	CHANGES	CAVI MACCHINA LUNGHEZZA	SHEET 100
LAYOUT APP'D															M/C No 318-89	SHEETS 150

FMA

EY01529

19 FEB 97 08.00

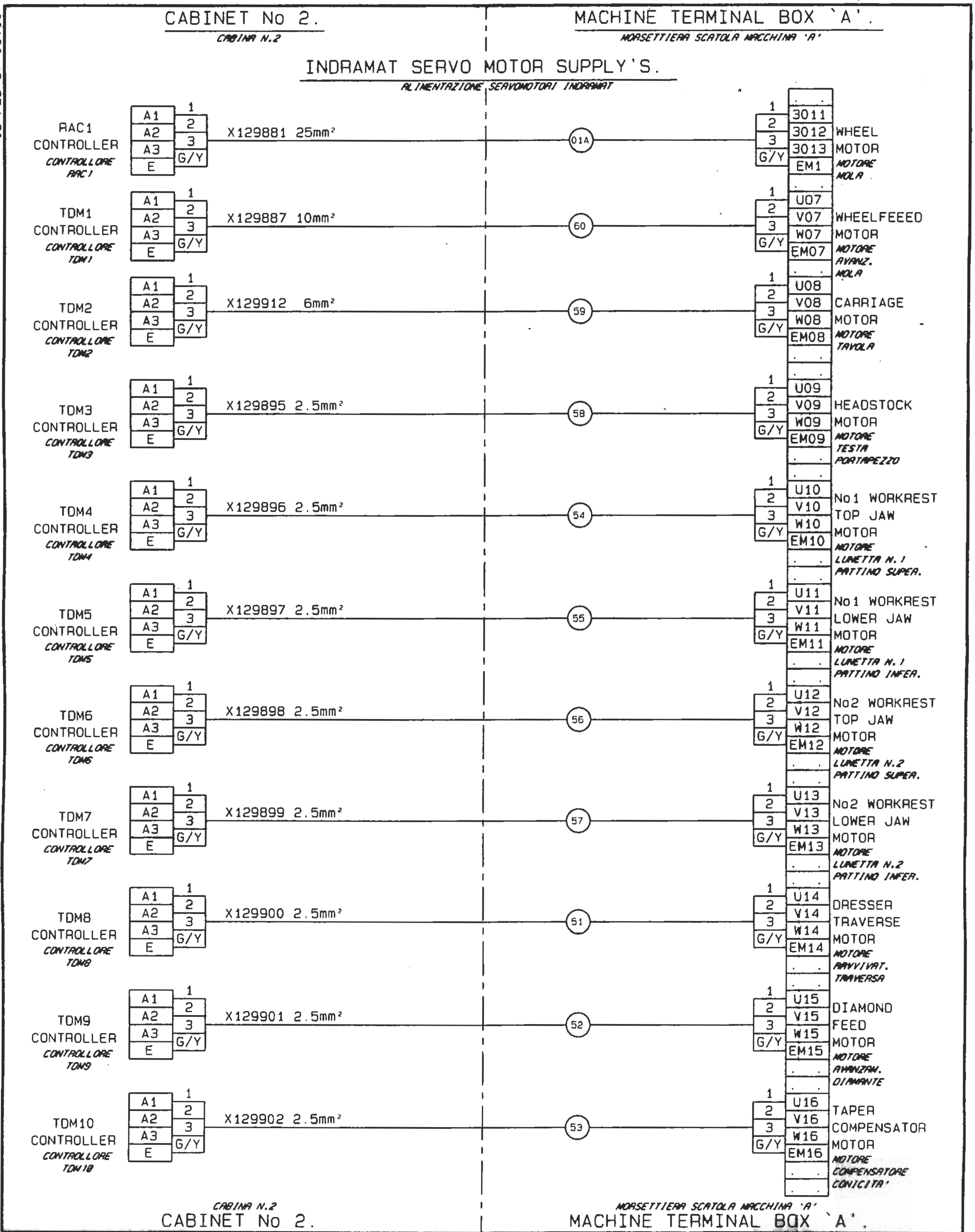

NAME	DATE	C.I.
KE	17-02-97	W/O 97032
KE	17-02-97	W/O 96950
KE	17-02-97	W/O 96607
KE	17-02-97	W/O 97645
KE	17-02-97	W/O 97662
KE	17-02-97	W/O 97287
KE	17-02-97	W/O 97839
KE	17-02-97	W/O 95856

CHANGES

DRAWN: RDP
CHECKED:
APPROVED:
LAYOUT APP'D:

TITLE: SERVO MOTOR CABLES.
CAVI SERVOMOTORI

M/C No 318-89

FMA

EY01529

MICROFILM:
REF.ORG: –
SHEET: 101
SHEETS: 150

19 FEB 97 08.00

CABINET No 2.
CABINA N.2

MACHINE TERMINAL BOX `A'.
MORSETTIERA SCATOLA MACCHINA 'A'

BASE V015594 *BASE*
FEMALE INSERT V025713 *INSERTO FEMMINA*
CODE PIN V015610 *CODICE*

380V A.C.

8	3048	SP	16
7	3047	SP	15
6	3031	SP	14
5	3030	SP	13
4	3029	SP	12
3	3019	SP	11
2	3018	SP	10
1	3017	3049	9

PR-SP 70 — X129869 — (70) 1.5mm² — PR-SP 70A

BASE V015594 *BASE*
MALE INSERT V025714 *INSERTO MASCHIO*
CODE PIN V015610 *CODICE*

380V A.C.

8	3048	SP	16
7	3047	SP	15
6	3031	SP	14
5	3030	SP	13
4	3029	SP	12
3	3019	SP	11
2	3018	SP	10
1	3017	3049	9

BASE V015594 *BASE*
FEMALE INSERT V025713 *INSERTO FEMMINA*
CODE PIN V015610 *CODICE*

110/220V A.C.

8	SP	SP	16
7	SP	SP	15
6	SP	SP	14
5	SP	323	13
4	SP	321	12
3	SP	135	11
2	127	132	10
1	125	131	9

PR-SP 71 — X129834 — (71) 1.0mm² — PR-SP 71A

BASE V015594 *BASE*
MALE INSERT V025714 *INSERTO MASCHIO*
CODE PIN V015610 *CODICE*

110/220V A.C.

8	SP	SP	16
7	SP	SP	15
6	SP	SP	14
5	SP	323	13
4	SP	321	12
3	SP	135	11
2	127	132	10
1	125	131	9

BASE V015594 *BASE*
FEMALE INSERT V025713 *INSERTO FEMMINA*
CODE PIN V015610 *CODICE*

24V D.C.

8	6	15	16
7	6	15	15
6	6	15	14
5	6	15	13
4	5	15	12
3	5	15	11
2	5	SP	10
1	5	8	9

PR-SP 72 — X129835 — (72) 1.0mm² — PR-SP 72A

BASE V015594 *BASE*
MALE INSERT V025714 *INSERTO MASCHIO*
CODE PIN V015610 *CODICE*

24V D.C.

8	6	15	16
7	6	15	15
6	6	15	14
5	6	15	13
4	5	15	12
3	5	15	11
2	5	SP	10
1	5	8	9

BASE V015594 *BASE*
FEMALE INSERT V025713 *INSERTO FEMMINA*
CODE PIN V015610 *CODICE*

24V D.C.

8	147	171	16
7	146	169	15
6	145	153	14
5	144	152	13
4	143	151	12
3	108	150	11
2	107	149	10
1	65	148	9

PR-SP 73 — X129836 — (73) 1.0mm² — PR-SP 73A

BASE V015594 *BASE*
MALE INSERT V025714 *INSERTO MASCHIO*
CODE PIN V015610 *CODICE*

24V D.C.

8	147	171	16
7	146	169	15
6	145	153	14
5	144	152	13
4	143	151	12
3	108	150	11
2	107	149	10
1	65	148	9

CABINA N.2
CABINET No 2.

MORSETTIERA SCATOLA MACCHINA 'A'
MACHINE TERMINAL BOX `A'.

DRAWN ADP						KE	KE	KE	KE	KE	KE	KE	KE	NAME		
CHECKED						17-02-97	17-02-97	17-02-97	17-02-97	17-02-97	17-02-97	17-02-97	17-02-97	DATE		
APPROVED						K/D 96958	K/D 97833	K/D 97287	K/D 97662	K/D 97645	K/D 96607	K/D 96950	K/D 97032	C.I.		
LAYOUT APP'D															CHANGES	

TITLE

CABINET CABLES
TO THE MACHINE.

CAVI DA CABINE ALLA MACCHINA

M/C No 318-89

FMA

EY01529

MICROFILM

REF.DRG
–

SHEET
102

SHEETS
150

19 FEB 97 08.00

CABINET No 2.
CABINA N.2

MACHINE TERMINAL BOX `A'.
MORSETTIERA SCATOLA MACCHINA 'A'

BASE V015594 *BASE*
FEMALE INSERT V025713 *INSERTO FEMMINA*
CODE PIN V015610 *CODICE*

24V D.C.

8	178	105	16
7	197	214	15
6	194	213	14
5	192	212	13
4	181	SP	12
3	179	204	11
2	174	203	10
1	172	202	9

PR-SP 74

X129837 — 74 — 1.0mm²

BASE V015594 *BASE*
MALE INSERT V025714 *INSERTO MASCHIO*
CODE PIN V015610 *CODICE*

PR-SP 74A

24V D.C.

8	178	105	16
7	197	214	15
6	194	213	14
5	192	212	13
4	181	SP	12
3	179	204	11
2	174	203	10
1	172	202	9

BASE V015594 *BASE*
FEMALE INSERT V025713 *INSERTO FEMMINA*
CODE PIN V015610 *CODICE*

24V D.C.

8	252	SP	16
7	SP	259	15
6	238	258	14
5	237	257	13
4	236	256	12
3	235	255	11
2	234	254	10
1	233	253	9

PR-SP 75

X129838 — 75 — 1.0mm²

BASE V015594 *BASE*
MALE INSERT V025714 *INSERTO MASCHIO*
CODE PIN V015610 *CODICE*

PR-SP 75A

24V D.C.

8	252	SP	16
7	SP	259	15
6	238	258	14
5	237	257	13
4	236	256	12
3	235	255	11
2	234	254	10
1	233	253	9

BASE V015594 *BASE*
FEMALE INSERT V025713 *INSERTO FEMMINA*
CODE PIN V015610 *CODICE*

24V D.C.

8	SP	309	16
7	SP	308	15
6	SP	SP	14
5	SP	SP	13
4	SP	SP	12
3	280	SP	11
2	279	SP	10
1	271	SP	9

PR-SP 76

X129833 — 76 — 1.0mm²

BASE V015594 *BASE*
MALE INSERT V025714 *INSERTO MASCHIO*
CODE PIN V015610 *CODICE*

PR-SP 76A

24V D.C.

8	SP	309	16
7	SP	308	15
6	SP	SP	14
5	SP	SP	13
4	SP	SP	12
3	280	SP	11
2	279	SP	10
1	271	SP	9

BASE V015594 *BASE*
FEMALE INSERT V025713 *INSERTO FEMMINA*
CODE PIN V015610 *CODICE*

24V D.C.

8	SP	SP	16
7	SP	SP	15
6	300	SP	14
5	299	SP	13
4	298	SP	12
3	296	SP	11
2	295	SP	10
1	294	SP	9

PR-SP 77

X129834 — 77 — 1.0mm²

BASE V015594 *BASE*
MALE INSERT V025714 *INSERTO MASCHIO*
CODE PIN V015610 *CODICE*

PR-SP 77A

24V D.C.

8	SP	SP	16
7	SP	SP	15
6	300	SP	14
5	299	SP	13
4	298	SP	12
3	296	SP	11
2	295	SP	10
1	294	SP	9

CABINA N.2
CABINET No 2.

MORSETTIERA SCATOLA MACCHINA 'A'
MACHINE TERMINAL BOX `A'.

DRAWN					KE	KE	KE	KE	KE	KE	KE	KE	KE	NAME	CHANGES
ROP					17-02-97	17-02-97	17-02-97	17-02-97	17-02-97	17-02-97	17-02-97	17-02-97	17-02-97	DATE	
CHECKED					W/O 96896	W/O 97833	W/O 97287	W/O 97662	W/O 97645	W/O 96607	W/O 96550	W/O 97032		C.I.	
APPROVED															
LAYOUT APP'D															

TITLE

CABINET CABLES
TO THE MACHINE.

CAVI DA CABINE
ALLA MACCHINA

M/C No 318-89

FMA

EY01529

MICROFILM

REF.DRG
–

SHEET
103

SHEETS
150

19 FEB 97 08.00

CABINET No 2.
CABINA N.2

MACHINE TERMINAL BOX `A'.
MORSETTIERA SCATOLA MACCHINA 'A'

BASE V015594 *BASE*
FEMALE INSERT V025713 *INSERTO FEMMINA*
CODE PIN V015610 *CODICE*

PR-SP 78 — X123539 — (78) — PR-SP 78A

BASE V015594 *BASE*
MALE INSERT V025714 *INSERTO MASCHIO*
CODE PIN V015610 *CODICE*

24V SCREEN CABLE (Cabinet No 2)

	8	. .	SCR	16 — SCR
	7	. .	. .	15
BLU — BLU	6	70	. .	14
GIA — YEL	5	SP	. .	13
RSS — RED	4	69	. .	12
VRD — GRN	3	SP	. .	11
NER — BLK	2	SP	. .	10
BNC — WHT	1	SP	. .	9

24V SCREEN CABLE (Machine Terminal Box 'A')

	8	. .	SCR	16 — SCR
	7	. .	. .	15
BLU — BLU	6	70	. .	14
GIA — YEL	5	SP	. .	13
RSS — RED	4	69	. .	12
VRD — GRN	3	SP	. .	11
NER — BLK	2	SP	. .	10
BNC — WHT	1	SP	. .	9

HYDRAULIC TERMINAL BOX `G'.
MORSETTIERA SCATOLA IDRAUL. 'G'

BASE V015594 *BASE*
FEMALE INSERT V025713 *INSERTO FEMMINA*
CODE PIN V015610 *CODICE*

PR-SP 79 — X129873 — (79) 1.5mm² — PR-SP 79G

BASE V015594 *BASE*
MALE INSERT V025714 *INSERTO MASCHIO*
CODE PIN V015610 *CODICE*

380V A.C. (Cabinet No 2)

8	SP	SP	16
7	SP	SP	15
6	3043	SP	14
5	3042	SP	13
4	3041	SP	12
3	3025	SP	11
2	3024	SP	10
1	3023	SP	9

380V A.C. (Hydraulic Terminal Box 'G')

8	SP	SP	16
7	SP	SP	15
6	3043	SP	14
5	3042	SP	13
4	3041	SP	12
3	3025	SP	11
2	3024	SP	10
1	3023	SP	9

BASE V015594 *BASE*
FEMALE INSERT V025713 *INSERTO FEMMINA*
CODE PIN V015610 *CODICE*

PR-SP 80 — X129838 — (80) 1.0mm² — PR-SP 80G

BASE V015594 *BASE*
MALE INSERT V025714 *INSERTO MASCHIO*
CODE PIN V015610 *CODICE*

24V D.C. (Cabinet No 2)

8	SP	SP	16
7	SP	SP	15
6	SP	SP	14
5	309	SP	13
4	236	SP	12
3	235	SP	11
2	15	SP	10
1	6	SP	9

24V D.C. (Hydraulic Terminal Box 'G')

8	SP	SP	16
7	SP	SP	15
6	SP	SP	14
5	309	SP	13
4	236	SP	12
3	235	SP	11
2	15	SP	10
1	6	SP	9

CABINA N.2
CABINET No 2.

CABINET No 3.
CABINA N.3

BASE V015594 *BASE*
FEMALE INSERT V025713 *INSERTO FEMMINA*
CODE PIN V015610 *CODICE*

PR-SP 81 — X129845 — (81) 1.0mm² — PR-SP 81G

BASE V015594 *BASE*
MALE INSERT V025714 *INSERTO MASCHIO*
CODE PIN V015610 *CODICE*

24V D.C. (Cabinet No 3)

8	SP	SP	16
7	770	SP	15
6	663	SP	14
5	660	SP	13
4	644	SP	12
3	643	SP	11
2	642	SP	10
1	519	SP	9

24V D.C. (Hydraulic Terminal Box 'G')

8	SP	SP	16
7	770	SP	15
6	663	SP	14
5	660	SP	13
4	644	SP	12
3	643	SP	11
2	642	SP	10
1	519	SP	9

CABINA N.3
CABINET No 3.

MORSETTIERA SCATOLA IDRAUL. 'G'
HYDRAULIC TERMINAL BOX `G'.

NAME	KE	KE	KE	KE	KE	KE	KE	KE
DATE	17-02-97	17-02-97	17-02-97	17-02-97	17-02-97	17-02-97	17-02-97	17-02-97
C.I.	W/O 95658	W/O 97833	W/O 97297	W/O 97662	W/O 97645	W/O 96607	W/O 96950	W/O 97032

CHANGES

DRAWN: RDP
CHECKED
APPROVED
LAYOUT APP'D

TITLE: CABINET CABLES TO THE MACHINE.
CAVI DA CABINE ALLA MACCHINA

M/C No 318-89

FMA

EY01529

MICROFILM
REF. DRG -
SHEET 104
SHEETS 150

19 FEB 97 08.00

CABINET No 3.
CABINA N.3

MACHINE TERMINAL BOX `A'.
MORSETTIERA SCATOLA MACCHINA 'A'

BASE V015594 *BASE*
FEMALE INSERT V025713 *INSERTO FEMMINA*
CODE PIN V015610 *CODICE*

PR-SP 82 — X129846 — (82) 1.0mm² — PR-SP 82A

24V D.C.			
8	665	SP	16
7	532	933	15
6	531	559	14
5	530	558	13
4	529	667	12
3	528	666	11
2	664	543	10
1	512	539	9

BASE V015594 *BASE*
MALE INSERT V025714 *INSERTO MASCHIO*
CODE PIN V015610 *CODICE*

24V D.C.			
8	665	SP	16
7	532	933	15
6	531	559	14
5	530	558	13
4	529	667	12
3	528	666	11
2	664	543	10
1	512	539	9

BASE V015594 *BASE*
FEMALE INSERT V025713 *INSERTO FEMMINA*
CODE PIN V015610 *CODICE*

PR-SP 83 — X129847 — (83) 1.0mm² — PR-SP 83A

24V D.C.			
8	567	575	16
7	SP	574	15
6	565	573	14
5	564	572	13
4	563	571	12
3	562	SP	11
2	561	569	10
1	560	568	9

BASE V015594 *BASE*
MALE INSERT V025714 *INSERTO MASCHIO*
CODE PIN V015610 *CODICE*

24V D.C.			
8	567	575	16
7	SP	574	15
6	565	573	14
5	564	572	13
4	563	571	12
3	562	SP	11
2	561	569	10
1	560	568	9

BASE V015594 *BASE*
FEMALE INSERT V025713 *INSERTO FEMMINA*
CODE PIN V015610 *CODICE*

PR-SP 84 — X129848 — (84) 1.0mm² — PR-SP 84A

24V D.C.			
8	583	591	16
7	SP	590	15
6	SP	589	14
5	SP	588	13
4	579	587	12
3	578	586	11
2	577	585	10
1	576	584	9

BASE V015594 *BASE*
MALE INSERT V025714 *INSERTO MASCHIO*
CODE PIN V015610 *CODICE*

24V D.C.			
8	583	591	16
7	SP	590	15
6	SP	589	14
5	SP	588	13
4	579	587	12
3	578	586	11
2	577	585	10
1	576	584	9

BASE V015594 *BASE*
FEMALE INSERT V025713 *INSERTO FEMMINA*
CODE PIN V015610 *CODICE*

PR-SP 85 — X129849 — (85) 1.0mm² — PR-SP 85A

24V D.C.			
8	599	607	16
7	598	606	15
6	597	605	14
5	596	604	13
4	595	603	12
3	594	602	11
2	593	601	10
1	592	600	9

BASE V015594 *BASE*
MALE INSERT V025714 *INSERTO MASCHIO*
CODE PIN V015610 *CODICE*

24V D.C.			
8	599	607	16
7	598	606	15
6	597	605	14
5	596	604	13
4	595	603	12
3	594	602	11
2	593	601	10
1	592	600	9

CABINA N.3
CABINET No 3.

MORSETTIERA SCATOLA MACCHINA 'A'
MACHINE TERMINAL BOX `A'.

DRAWN					KE	KE	KE	KE	KE	KE	KE	KE	NAME	CHANGES	TITLE	MICROFILM
RDP					17-02-97	17-02-97	17-02-97	17-02-97	17-02-97	17-02-97	17-02-97	17-02-97	DATE		CABINET CABLES TO THE MACHINE. *CAVI DA CABINE ALLA MACCHINA*	REF.DRG –
CHECKED					W/O 96985	W/O 97633	W/O 97282	W/O 97652	W/O 97645	W/O 95607	W/O 96950	W/O 97032	C.I.			SHEET 105
APPROVED															M/C No 318-89	SHEETS 150
LAYOUT APP'D																

FMA

EY01529

19 FEB 97 08.00

CABINET No 3.
CABINA N.3

MACHINE TERMINAL BOX `A'.
MORSETTIERA SCATOLA MACCHINA 'A'

BASE V015594 *BASE*
FEMALE INSERT V025713 *INSERTO FEMMINA*
CODE PIN V015610 *CODICE*

PR-SP 86 — X129850 — (86) 1.0mm² — PR-SP 86A

24V D.C.

8	615	623	16
7	614	622	15
6	613	621	14
5	612	620	13
4	611	619	12
3	610	618	11
2	609	617	10
1	608	616	9

BASE V015594 *BASE*
MALE INSERT V025714 *INSERTO MASCHIO*
CODE PIN V015610 *CODICE*

24V D.C.

8	615	623	16
7	614	622	15
6	613	621	14
5	612	620	13
4	611	619	12
3	610	618	11
2	609	617	10
1	608	616	9

BASE V015594 *BASE*
FEMALE INSERT V025713 *INSERTO FEMMINA*
CODE PIN V015610 *CODICE*

PR-SP 87 — X129845 — (87) 1.0mm² — PR-SP 87A

24V D.C.

8	631	639	16
7	630	638	15
6	629	637	14
5	628	636	13
4	627	635	12
3	626	634	11
2	625	633	10
1	624	632	9

BASE V015594 *BASE*
MALE INSERT V025714 *INSERTO MASCHIO*
CODE PIN V015610 *CODICE*

24V D.C.

8	631	639	16
7	630	638	15
6	629	637	14
5	628	636	13
4	627	635	12
3	626	634	11
2	625	633	10
1	624	632	9

BASE V015594 *BASE*
FEMALE INSERT V025713 *INSERTO FEMMINA*
CODE PIN V015610 *CODICE*

PR-SP 88 — X129846 — (88) 1.0mm² — PR-SP 88A

24V D.C.

8	650	SP	16
7	649	SP	15
6	648	661	14
5	647	SP	13
4	646	658	12
3	SP	657	11
2	641	656	10
1	640	651	9

BASE V015594 *BASE*
MALE INSERT V025714 *INSERTO MASCHIO*
CODE PIN V015610 *CODICE*

24V D.C.

8	650	SP	16
7	649	SP	15
6	648	661	14
5	647	SP	13
4	646	658	12
3	SP	657	11
2	641	656	10
1	640	651	9

BASE V015594 *BASE*
FEMALE INSERT V025713 *INSERTO FEMMINA*
CODE PIN V015610 *CODICE*

PR-SP 89 — X129847 — (89) 1.0mm² — PR-SP 89A

24V D.C.

8	655	SP	16
7	654	SP	15
6	653	SP	14
5	652	SP	13
4	671	791	12
3	670	790	11
2	669	786	10
1	668	768	9

BASE V015594 *BASE*
MALE INSERT V025714 *INSERTO MASCHIO*
CODE PIN V015610 *CODICE*

24V D.C.

8	655	SP	16
7	654	SP	15
6	653	SP	14
5	652	SP	13
4	671	791	12
3	670	790	11
2	669	786	10
1	668	768	9

CABINA N.3
CABINET No 3.

MORSETTIERA SCATOLA MACCHINA 'A'
MACHINE TERMINAL BOX `A'.

	NAME	DATE	C.I.
DRAWN	RDP		
CHECKED			
APPROVED			
LAYOUT APP'D			

CHANGES

TITLE: CABINET CABLES TO THE MACHINE.
CAVI DA CABINE ALLA MACCHINA

M/C No 318-89

FMA

EY01529

MICROFILM
REF. DRG —
SHEET 106
SHEETS 150

24JUN997 10.28

CABINET No 3.
CABINA N.3

MACHINE TERMINAL BOX `A'.
MORSETTIERA SCATOLA MACCHINA 'A'

BASE V015594 *BASE*
FEMALE INSERT V025713 *INSERTO FEMMINA*
CODE PIN V015610 *CODICE*

PR-SP 90

24V D.C.

8	836	823	16
7	807	822	15
6	806	821	14
5	805	820	13
4	804	819	12
3	803	818	11
2	802	817	10
1	800	816	9

X129848 — 90 — 1.0mm²

BASE V015594 *BASE*
MALE INSERT V025714 *INSERTO MASCHIO*
CODE PIN V015610 *CODICE*

PR-SP 90A

24V D.C.

8	836	823	16
7	807	822	15
6	806	821	14
5	805	820	13
4	804	819	12
3	803	818	11
2	802	817	10
1	800	816	9

BASE V015594 *BASE*
FEMALE INSERT V025713 *INSERTO FEMMINA*
CODE PIN V015610 *CODICE*

PR-SP 91

24V D.C.

8	839	871	16
7	838	870	15
6	853	869	14
5	852	868	13
4	835	867	12
3	834	866	11
2	SP	865	10
1	832	864	9

X129849 — 91 — 1.0mm²

BASE V015594 *BASE*
MALE INSERT V025714 *INSERTO MASCHIO*
CODE PIN V015610 *CODICE*

PR-SP 91A

24V D.C.

8	839	871	16
7	838	870	15
6	853	869	14
5	852	868	13
4	835	867	12
3	834	866	11
2	SP	865	10
1	832	864	9

BASE V015594 *BASE*
FEMALE INSERT V025713 *INSERTO FEMMINA*
CODE PIN V015610 *CODICE*

PR-SP 92

24V D.C.

8	887	SP	16
7	SP	SP	15
6	885	SP	14
5	884	SP	13
4	883	SP	12
3	882	903	11
2	881	902	10
1	880	901	9

X129850 — 92 — 1.0mm²

BASE V015594 *BASE*
MALE INSERT V025714 *INSERTO MASCHIO*
CODE PIN V015610 *CODICE*

PR-SP 92A

24V D.C.

8	887	SP	16
7	SP	SP	15
6	885	SP	14
5	884	SP	13
4	883	SP	12
3	882	903	11
2	881	902	10
1	880	901	9

CABINA N.3
CABINET No 3.

MORSETTIERA SCATOLA MACCHINA 'A'
MACHINE TERMINAL BOX `A'.

DRAWN RDP		NAME	JJC
CHECKED		DATE	24.1.97
APPROVED		C.I.	MMU775
LAYOUT APP'D		CHANGES	

TITLE
CABINET CABLES
TO THE MACHINE.
CAVI DA CABINE ALLA MACCHINA

M/C No 318-89

FMA

EY01529

MICROFILM
REF.DRG —
SHEET 107
SHEETS 150

199SEP8997 08.00

LOADER
CARICATORE

MACHINE CABINET No 3
CABINA MACCHINA N.3

BASE V015056
SOCKET V015059

PR-SP 96

(96)

24V D.C.

12	SP	17	24
11	SP	16	23
10	SP	318	22
9	SP	315	21
8	916	SP	20
7	935	SP	19
6	914	SP	18
5	913	SP	17
4	314	SP	16
3	311	918	15
2	912	SP	14
1	310	919	13

BASE V015056
PLUG V015058

PR-SP 97

(97)

24V D.C.

12	6	15	24
11	679	6	23
10	678	SP	22
9	SP	SP	21
8	676	675	20
7	686	SP	19
6	674	685	18
5	673	684	17
4	233	683	16
3	768	682	15
2	672	681	14
1	688	680	13

E50 POST PROCESS GAUGE
CALIBRO POST PROCESS MARPOSS E50

BASE V015056
SOCKET V015059
CODE PINS V015610

PR-SP 130

(130)

24V D.C.

12	899	15	24
11	898	6	23
10	339	SP	22
9	698	SP	21
8	694	SP	20
7	693	SP	19
6	692	SP	18
5	691	697	17
4	690	696	16
3	689	695	15
2	700	SP	14
1	699	SP	13

FMA MONITORING
MONITORIZZAZIONE FMA

BASE V015056
SOCKET V015059

PR-SP 131

(131)

24V D.C.

12	948	SP	24
11	947	SP	23
10	946	15	22
9	945	9	21
8	944	SP	20
7	934	SP	19
6	933	SP	18
5	932	SP	17
4	931	SP	16
3	930	951	15
2	929	950	14
1	928	949	13

CABINA MACCHINA N.3
MACHINE CABINET No 3

DRAWN	RDP
CHECKED	
APPROVED	
LAYOUT APP'D	

NAME	DATE	C.I.
KE	17-02-97	W/O 97032
KE	17-02-97	W/O 95550
KE	17-02-97	W/O 95607
KE	17-02-97	W/O 97645
KE	17-02-97	W/O 97662
KE	17-02-97	W/O 97287
KE	17-02-97	W/O 97833
KE	17-02-97	W/O 95858

CHANGES

TITLE
LOADER, POST PROCESS GAUGE AND MONITORING CABLE.
CAVI CARICATORE / CALIBRO POST PROCESS / MONITORIZZAZIONE FMA

M/C No 318-89

FMA

EY01529

MICROFILM

REF.DRG –

SHEET 108

SHEETS 150

19 FEB 97 08.00

MACHINE TERMINAL BOX `A'.
MORSETTIERA SCATOLA MACCHINA 'A'

CONSOLE
CONSOLE

BASE V015594 *BASE*
MALE INSERT V025714 *INSERTO MASCHIO*
CODE PIN V015610 *CODICE*

PR-SP 100H

X129927 — 100

110/220V A.C.

8	SP	SP	16
7	SP	SP	15
6	SP	SP	14
5	SP	SP	13
4	SP	SP	12
3	SP	135	11
2	127	132	10
1	125	131	9

BASE V015594 *BASE*
MALE INSERT V025714 *INSERTO MASCHIO*
CODE PIN V015610 *CODICE*

PR-SP 101H

X129928 — 101

24V D.C.

8	169	271	16
7	108	259	15
6	107	238	14
5	65	237	13
4	15	236	12
3	8	234	11
2	6	233	10
1	5	197	9

BASE V015594 *BASE*
MALE INSERT V025714 *INSERTO MASCHIO*
CODE PIN V015610 *CODICE*

PR-SP 102H

X129929 — 102

24V D.C.

8	851	563	16
7	850	562	15
6	SP	561	14
5	849	560	13
4	848	575	12
3	SP	512	11
2	280	105	10
1	279	308	9

BASE V015594 *BASE*
MALE INSERT V025714 *INSERTO MASCHIO*
CODE PIN V015610 *CODICE*

PR-SP 103H

X129930 — 103

24V D.C.

8	609	617	16
7	608	616	15
6	574	615	14
5	573	614	13
4	572	613	12
3	571	612	11
2	565	611	10
1	564	610	9

MORSETTIERA SCATOLA MACCHINA 'A'
MACHINE TERMINAL BOX `A'.

CONSOLE
CONSOLE

DRAWN ADP							KE	KE	KE	KE	KE	KE	KE	KE	NAME
CHECKED							17-02-97	17-02-97	17-02-97	17-02-97	17-02-97	17-02-97	17-02-97	17-02-97	DATE
APPROVED							K/O 95858	K/O 97833	K/O 97287	K/O 97662	K/O 97645	K/O 96607	K/O 96950	K/O 97032	C.I.
LAYOUT APP'D															

CHANGES

TITLE
CABLES MACHINE JUNCTION BOX `A' TO THE CONSOLE.
CAVI DA SCATOLA DI GIUNZIONE 'A' ALLA CONSOLE

M/C No 318-89

FMA

EY01529

MICROFILM
REF.ORG —
SHEET 109
SHEETS 150

MACHINE TERMINAL BOX `A'.

MORSETTIERA SCATOLA MACCHINA 'A'

CONSOLE

CONSOLE

BASE V015594 *BASE*
MALE INSERT V025714 *INSERTO MASCHIO*
CODE PIN V015610 *CODICE*

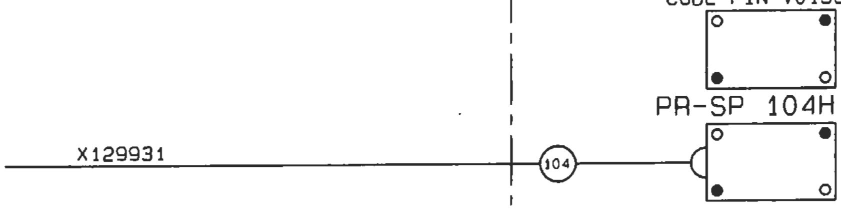

24V D.C.

8	625	633	16
7	624	632	15
6	623	631	14
5	622	630	13
4	621	629	12
3	620	628	11
2	619	627	10
1	618	626	9

BASE V015594 *BASE*
MALE INSERT V025714 *INSERTO MASCHIO*
CODE PIN V015610 *CODICE*

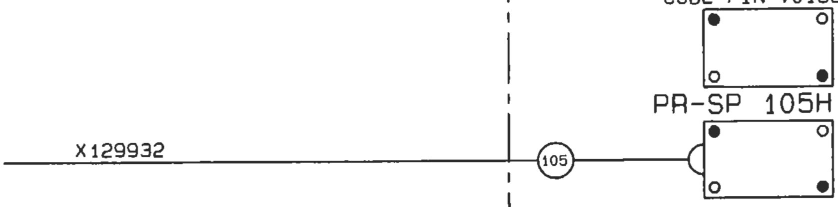

24V D.C.

8	657	SP	16
7	656	SP	15
6	639	567	14
5	638	671	13
4	637	670	12
3	636	669	11
2	635	668	10
1	634	658	9

BASE V015594 *BASE*
MALE INSERT V025714 *INSERTO MASCHIO*
CODE PIN V015610 *CODICE*

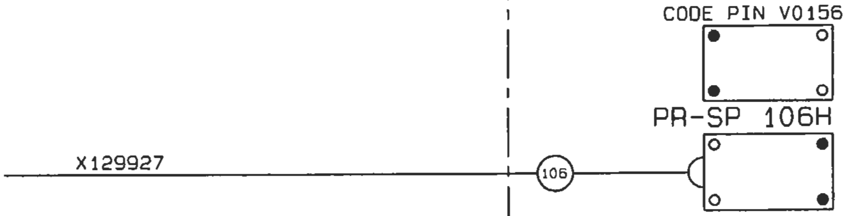

24V D.C.

8	832	SP	16
7	822	655	15
6	821	654	14
5	820	653	13
4	819	652	12
3	818	823	11
2	817	835	10
1	816	834	9

MORSETTIERA SCATOLA MACCHINA 'A'
MACHINE TERMINAL BOX `A'.

CONSOLE
CONSOLE

DRAWN: ROP
CHECKED
APPROVED
LAYOUT APP'D

NAME	DATE	C.I.
KE	17-02-97	W/O 97032
KE	17-02-97	W/O 96950
KE	17-02-97	W/O 96607
KE	17-02-97	W/O 97645
KE	17-02-97	W/O 97662
KE	17-02-97	W/O 97287
KE	17-02-97	W/O 97833
KE	17-02-97	W/O 95658

CHANGES

TITLE
CABLES MACHINE JUNCTION BOX `A' TO THE CONSOLE.

CAVI DA SCATOLA DI GIUNZIONE 'A' ALLA CONSOLE

M/C No 318-89

FMA

EY01529

MICROFILM
REF.DRG –
SHEET 110
SHEETS 150

19 FEB 97 08.00

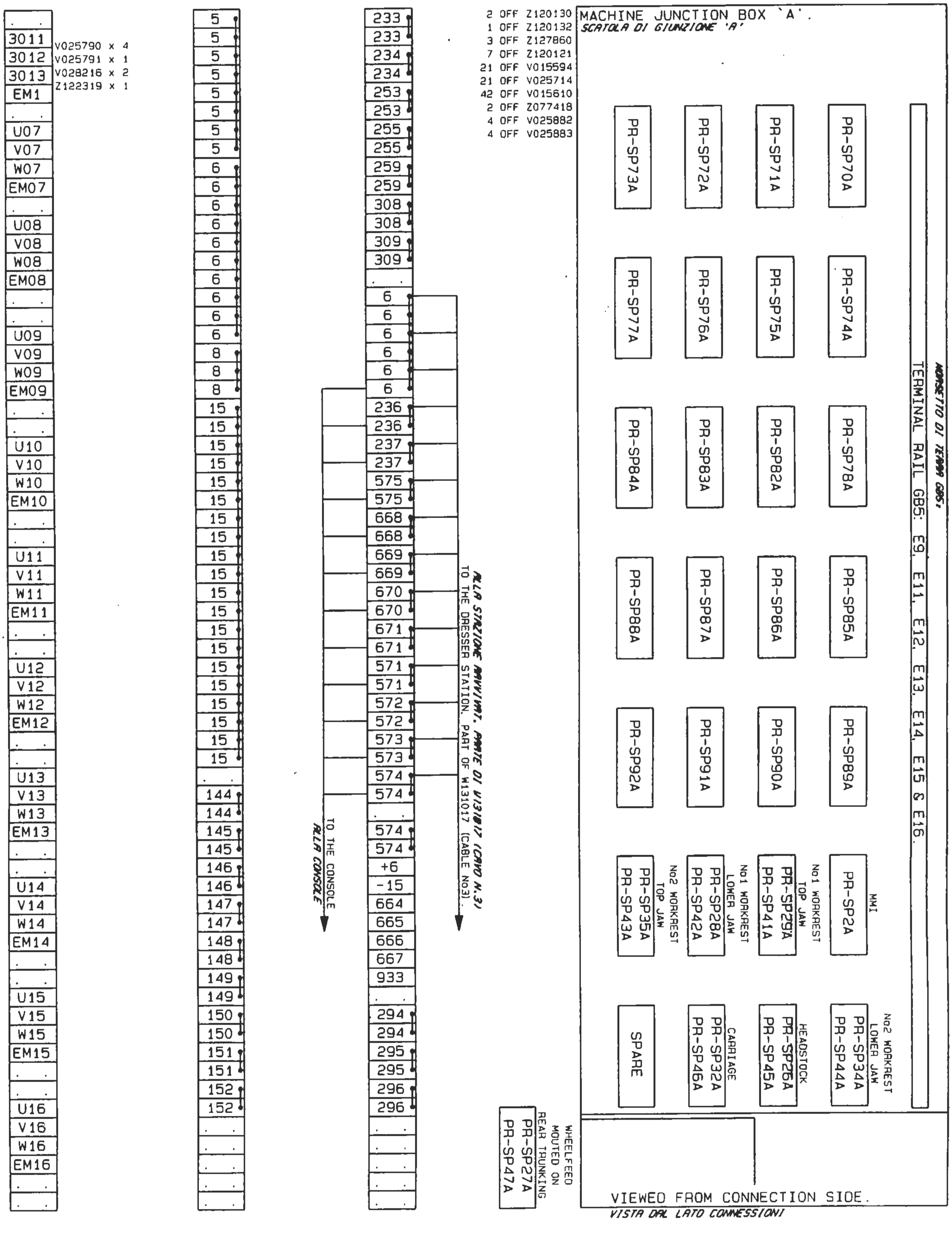

NOTE:
DRESSER STATION MOUNTED ON THE JUNCTION BOX DOOR. SEE SHEET 121.

NOTA:
STAZIONE RAVVIVATURA MONTATA SULLA PORTA DELLA SCATOLA DI GIUNZIONE VEDI FOGLIO 121.

DRAWN	RDP
CHECKED	
APPROVED	
LAYOUT APP'D	

TITLE

JUNCTION BOX `A'
LAYOUT.

DISPOS. SCATOLA DI GIUNZIONE 'A'

M/C No 318-89

FMA

EY01529

MICROFILM	
REF. DRG	—
SHEET	111
SHEETS	150

19 FEB 97 08.00

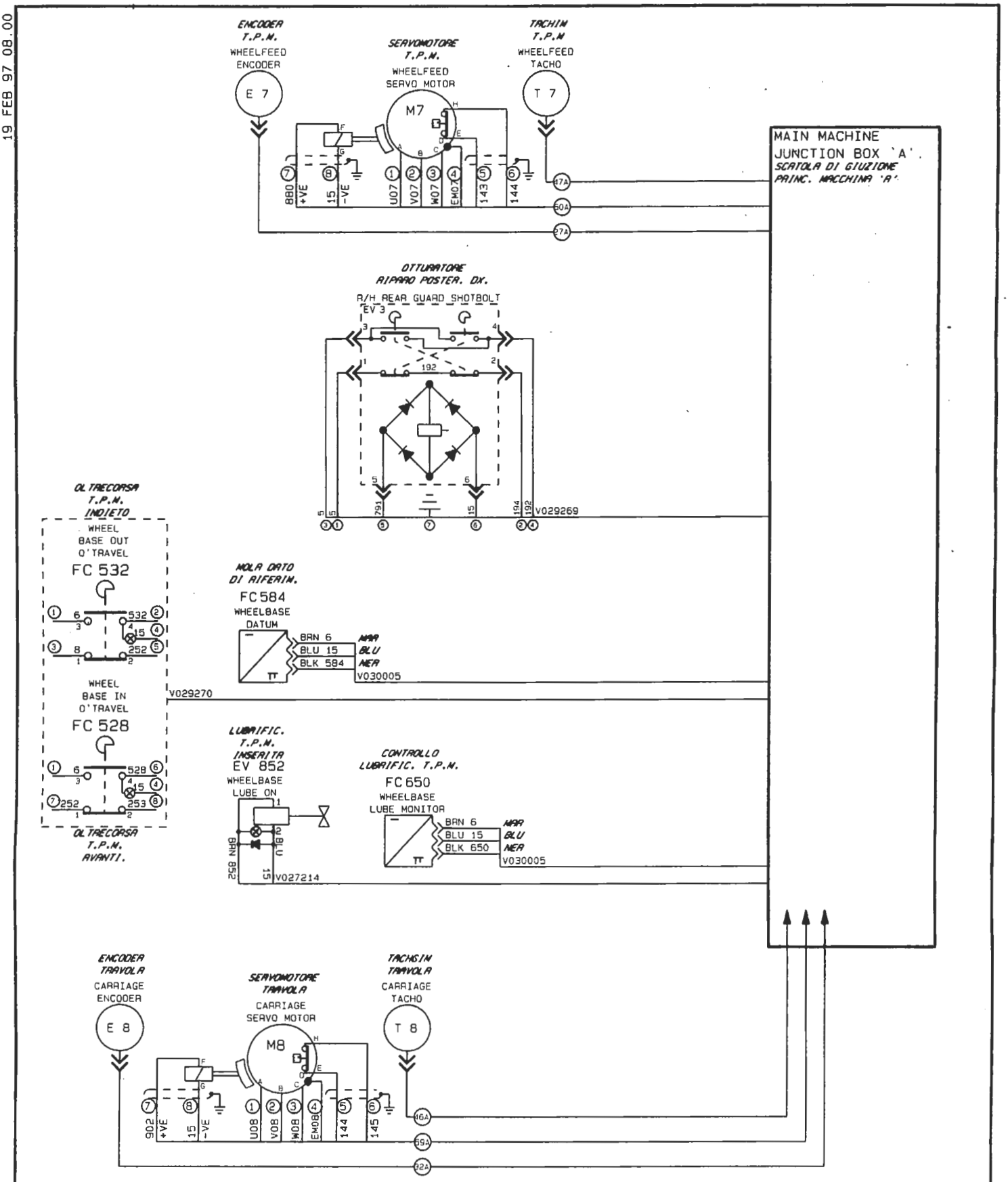

| | | |

19 FEB 97 08.00

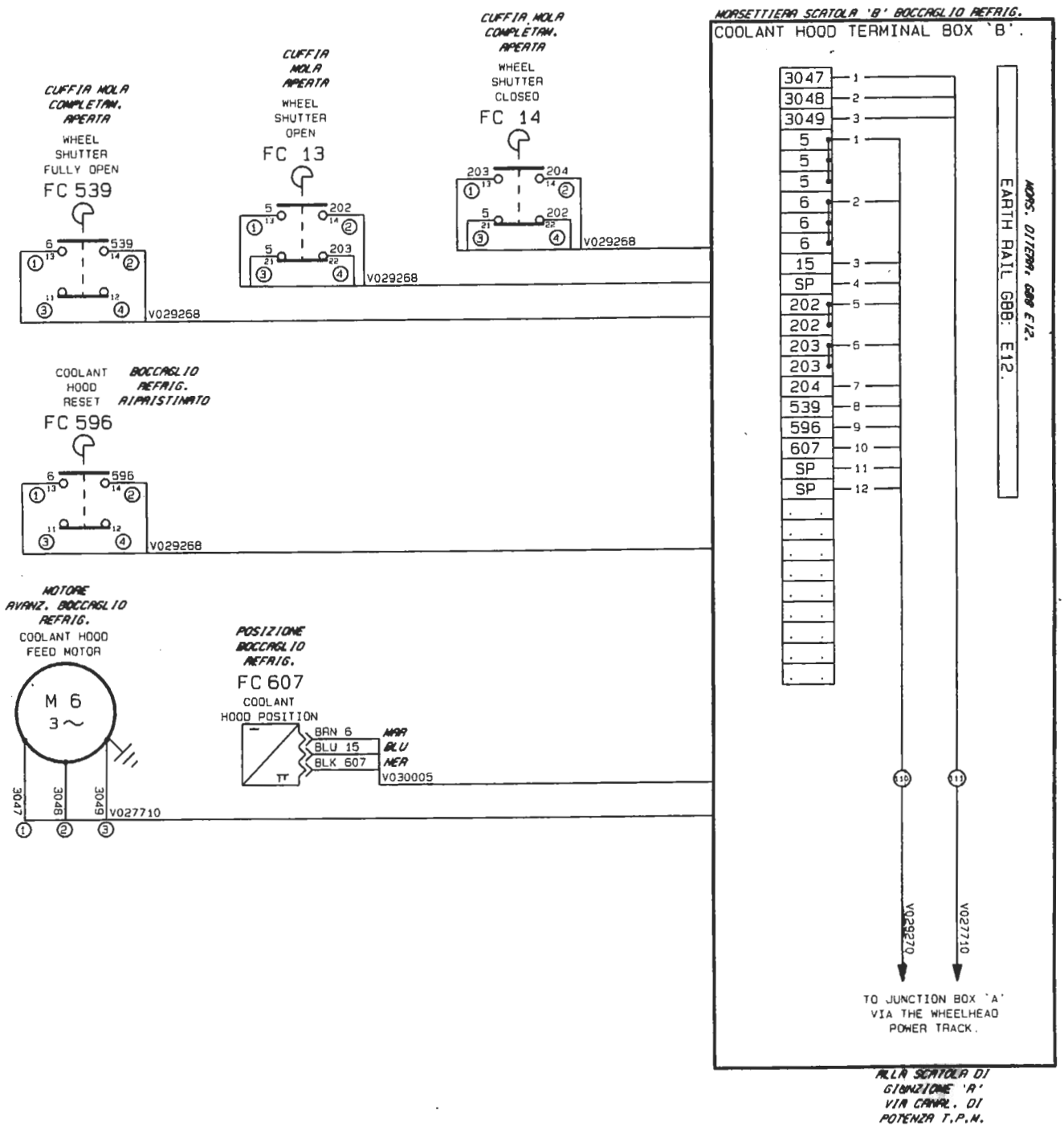

DRAWN RDP					KE	KE	KE	KE	KE	KE	KE	KE	KE	NAME	CHANGES	TITLE	MICROFILM
CHECKED					17-02-97	17-02-97	17-02-97	17-02-97	17-02-97	17-02-97	17-02-97	17-02-97	17-02-97	DATE		MACHINE WIRING.	REF.DRG –
APPROVED					W/O 95859	W/O 97833	W/O 97287	W/O 97662	W/O 97645	W/O 96607	W/O 96550	W/O 97032	C.I.			DIAGRAMMA CAVI DELLA MACCHINA	SHEET 113
LAYOUT APP'D																M/C No 318-89	SHEETS 150

FMA

EY01529

19 FEB 97 08.00

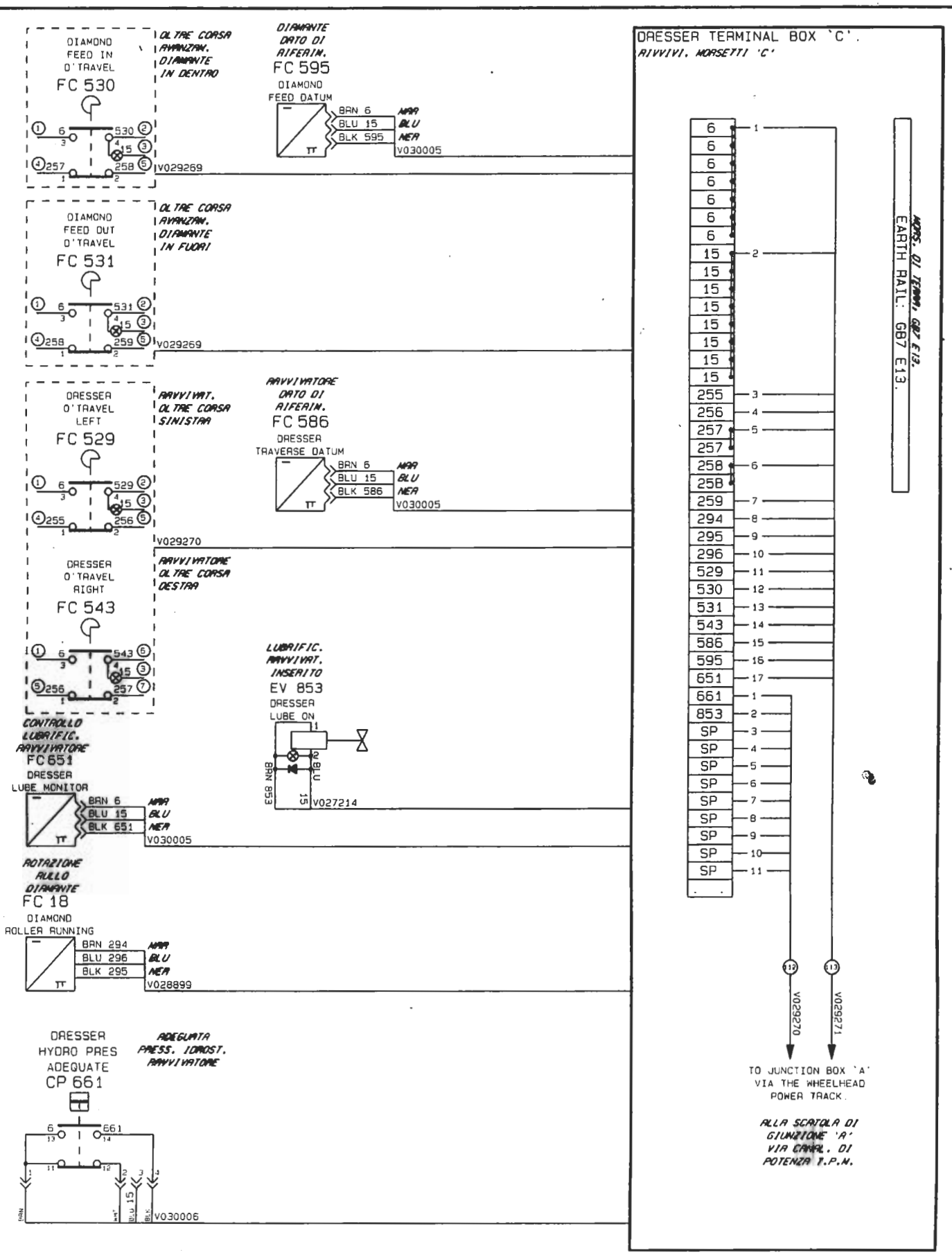

DRAWN						KE	KE	KE	KE	KE	KE	KE	KE	KE	NAME	CHANGES	TITLE	MICROFILM
RDP						17-02-97	17-02-97	17-02-97	17-02-97	17-02-97	17-02-97	17-02-97	17-02-97	17-02-97	DATE		MACHINE WIRING.	
CHECKED						W/O 95658	W/O 97039	W/O 97287	W/O 97642	W/O 97645	W/O 96607	W/O 96950	W/O 97032		C I.		DIAGRAMMA CAVI DELLA MACCHINA	REF.DRG —
APPROVED																	EY01529	SHEET 114
LAYOUT APP'D																	M/C No 318-89	SHEETS 150

19 FEB 97 08.00

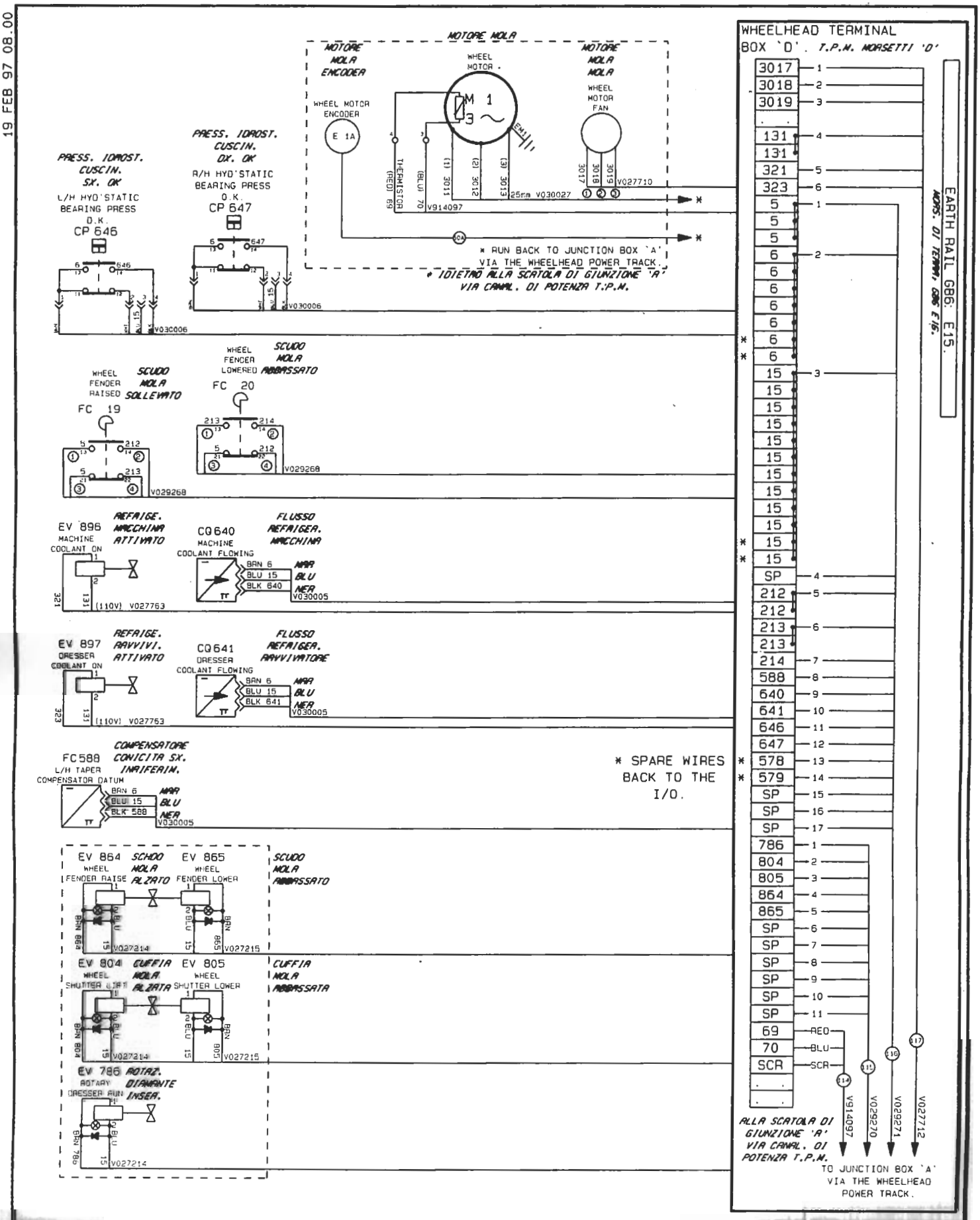

| | | |

19 FEB 97 08.00

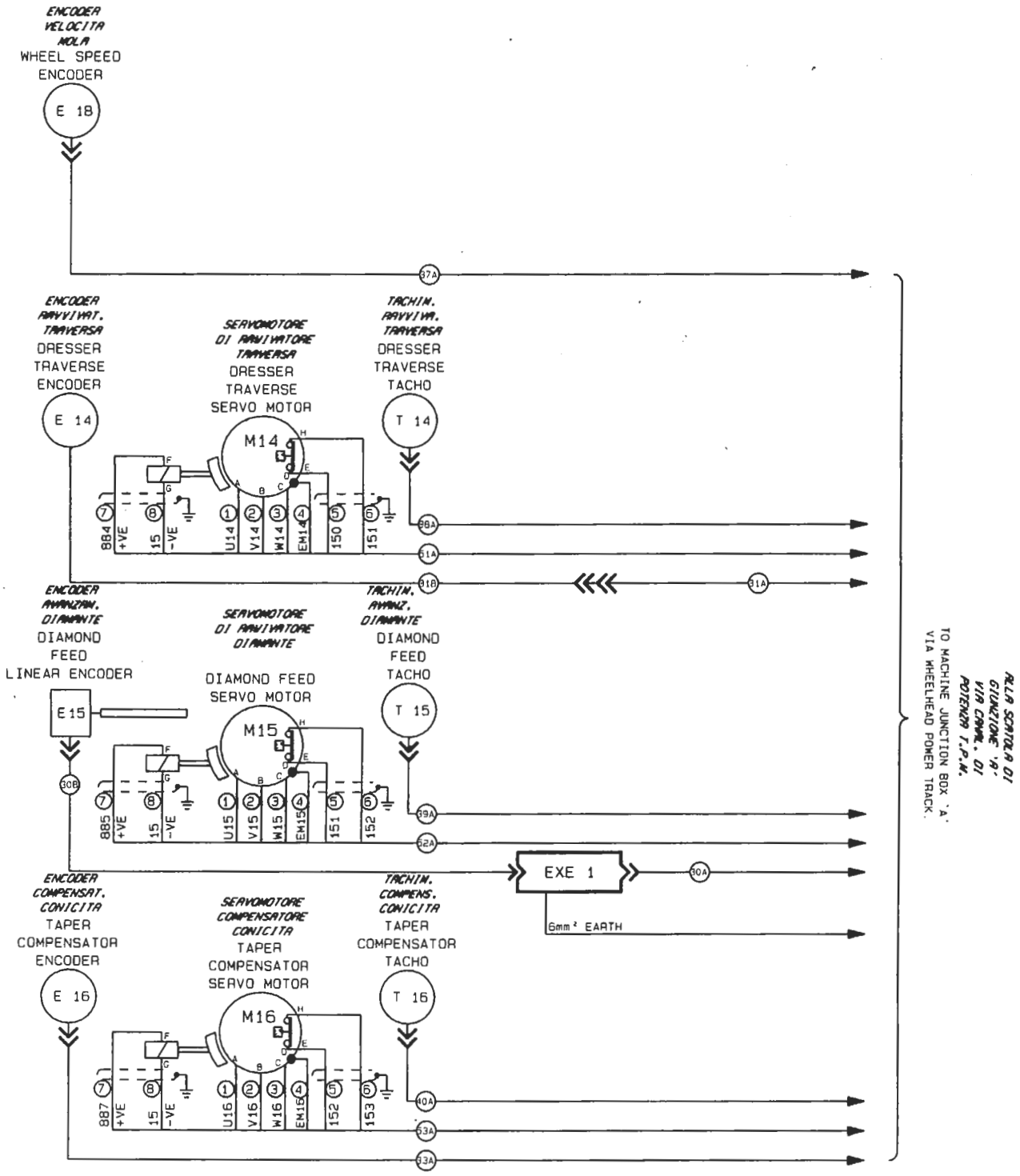

DRAWN ROP							K	K	K	K	K	K	K	K	K	NAME	CHANGES
CHECKED							17-02-97	17-02-97	17-02-97	17-02-97	17-02-97	17-02-97	17-02-97	17-02-97	17-02-97	DATE	
APPROVED							M/O 9559	M/O 9558	M/O 9928	M/O 9962	M/O 9963	M/O 9507	M/O 9550	M/O 9550	M/O 9703	C. I.	
LAYOUT APP'D																	

TITLE

MACHINE WIRING.

DIAGRAMMA CAVI DELLA MACCHINA

M/C No 318-89

FMA

EY01529

MICROFILM

REF. DRG —

SHEET 116

SHEETS 150

19 FEB 97 08.00

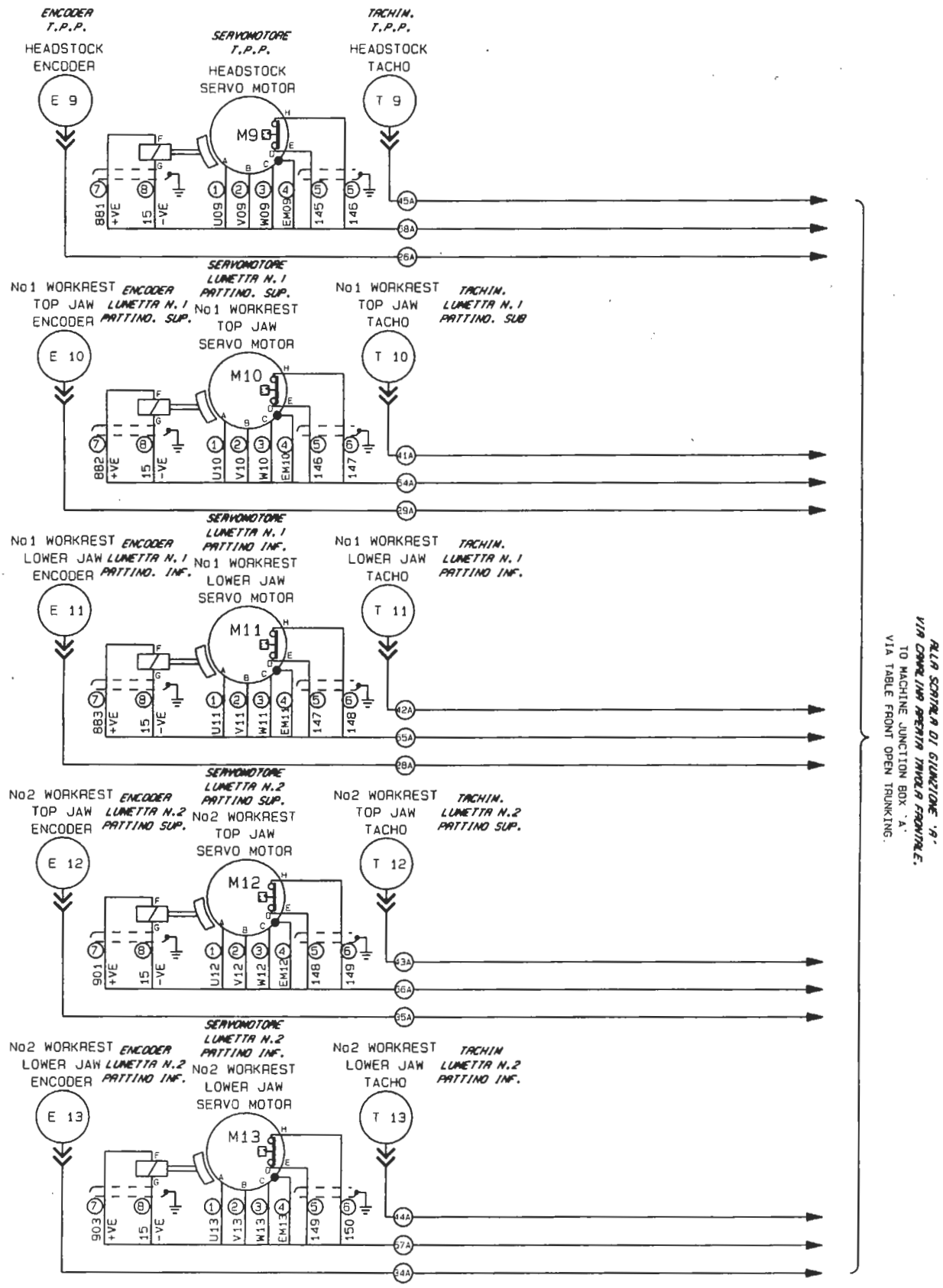

| | | |

19 FEB 97 08.00

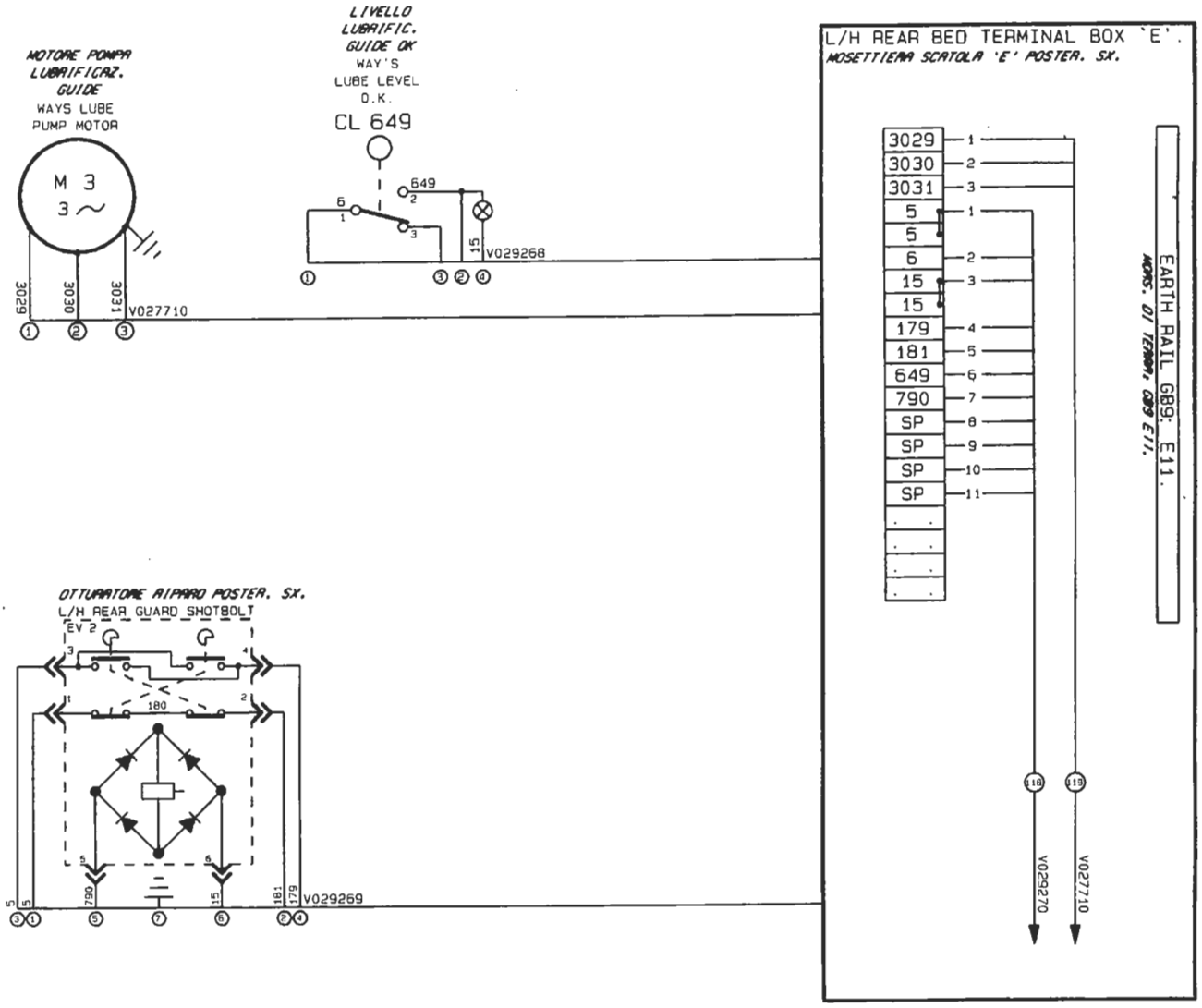

| | | |

19 FEB 97 08.00

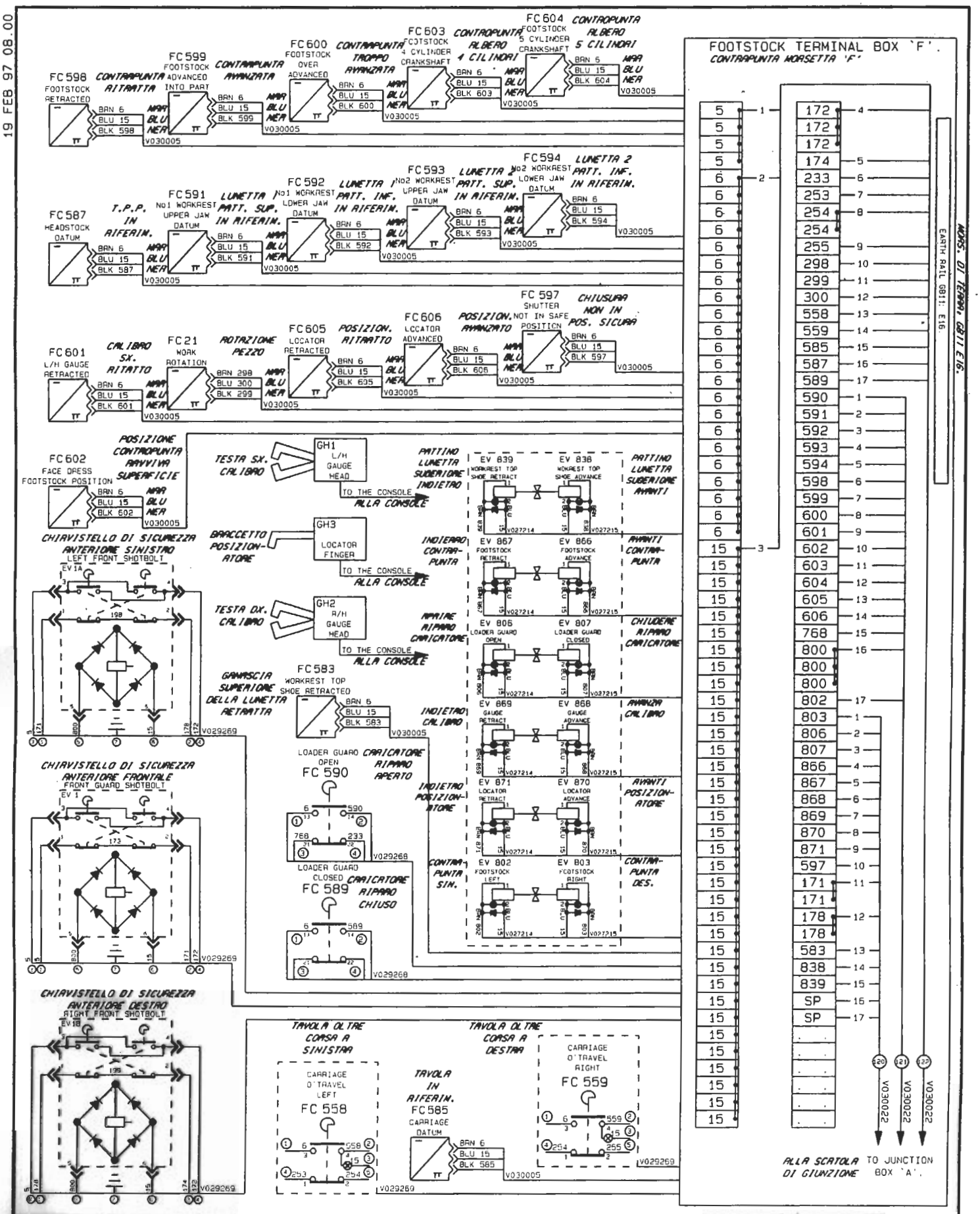

| | | |

19 FEB 97 08.00

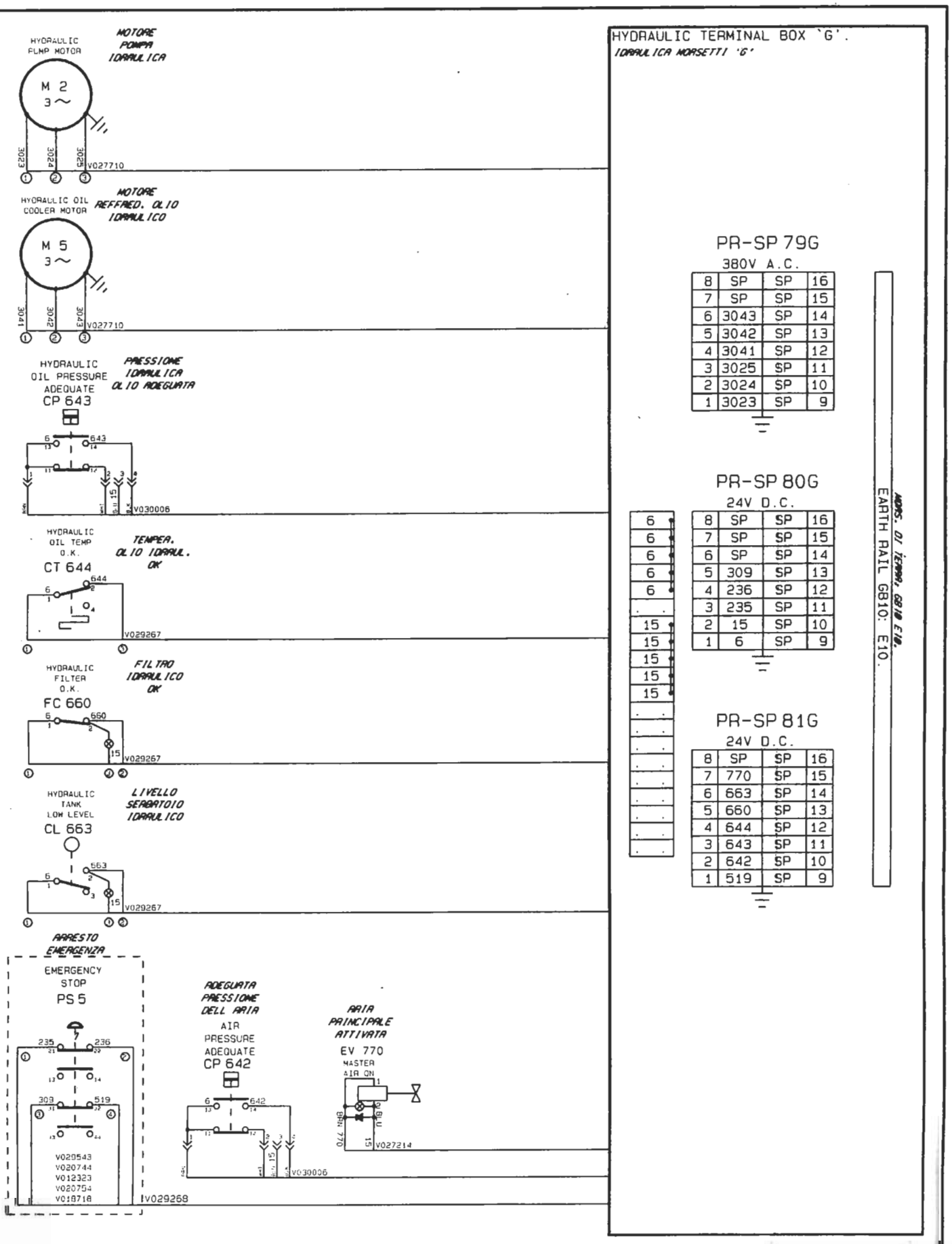

8	SP	SP	16
7	SP	SP	15
6	3043	SP	14
5	3042	SP	13
4	3041	SP	12
3	3025	SP	11
2	3024	SP	10
1	3023	SP	9

8	SP	SP	16
7	SP	SP	15
6	SP	SP	14
5	309	SP	13
4	236	SP	12
3	235	SP	11
2	15	SP	10
1	6	SP	9

8	SP	SP	16
7	770	SP	15
6	663	SP	14
5	660	SP	13
4	644	SP	12
3	643	SP	11
2	642	SP	10
1	519	SP	9

| | | |

19 FEB 97 08.00

DRESSER PUSHBUTTONS MOUNTED ON THE JUNCTION BOX `A' DOOR.

PULSANTI RAVVIVATORE MONTATI SULLA PORTA DELLA SCATOLA DI GIUNZIONE 'A'.

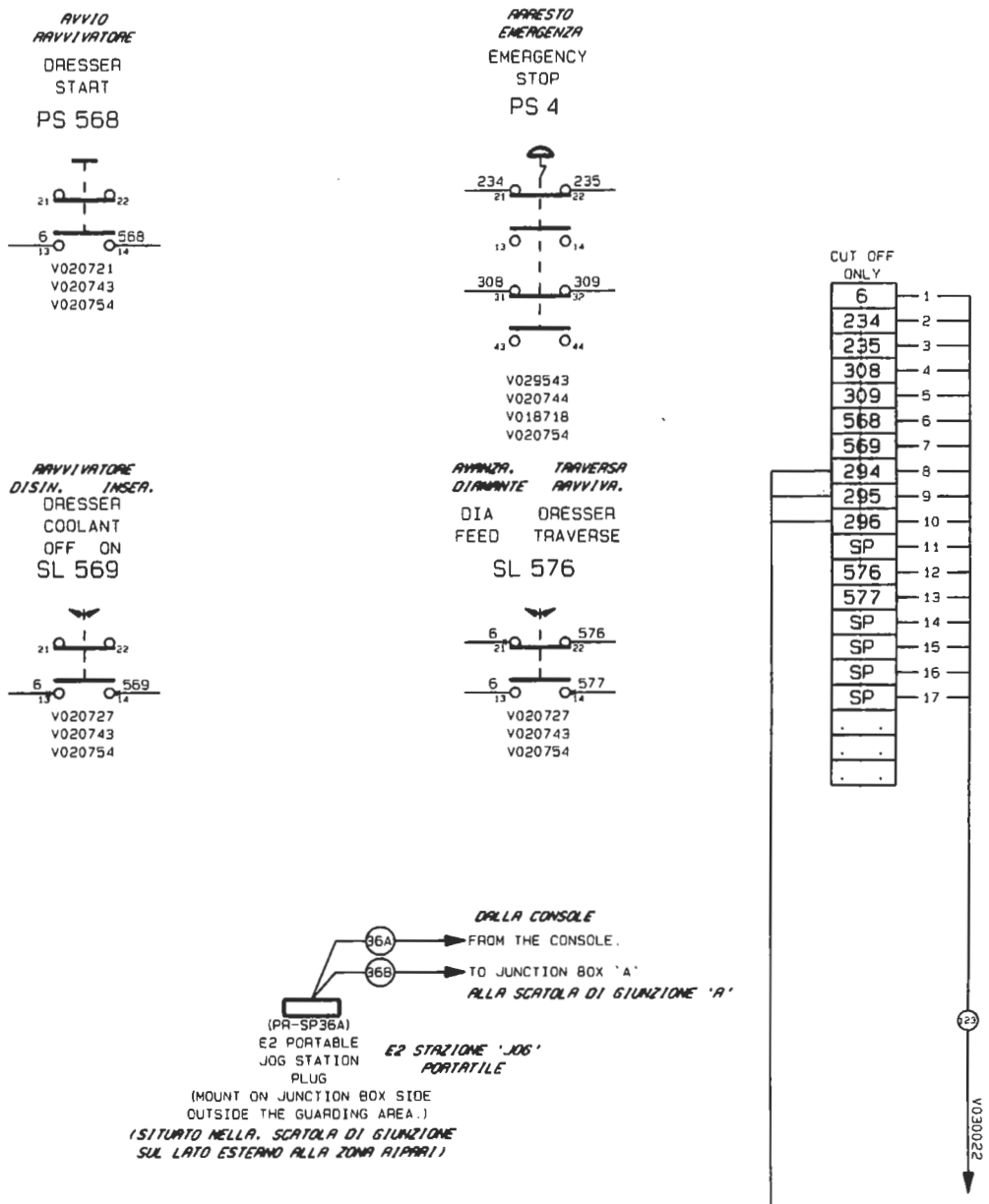

| | | |

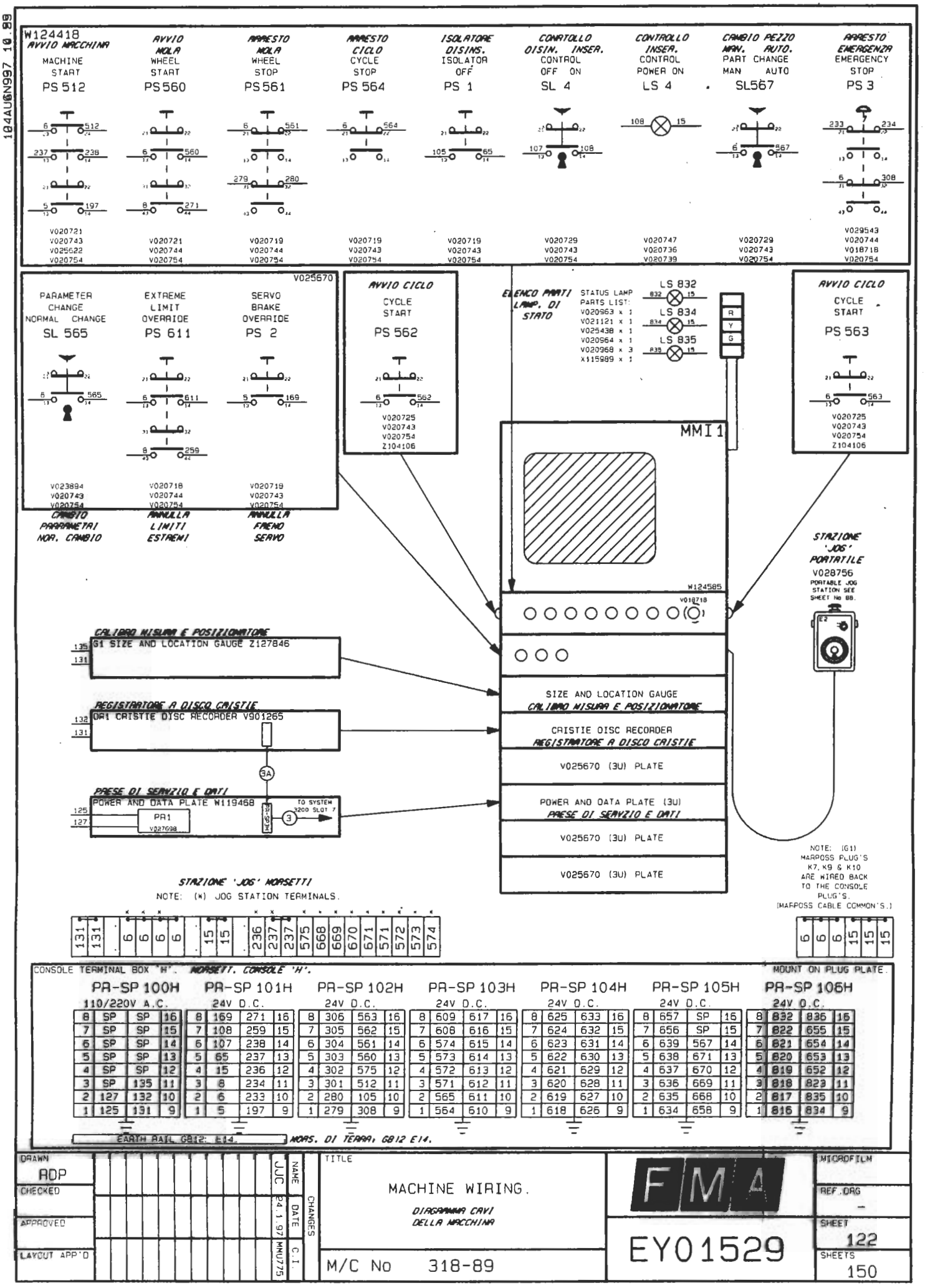
W124418
AVVIO MACCHINA
MACHINE START
PS 512
AVVIO MOLA
WHEEL START
PS 560
ARRESTO MOLA
WHEEL STOP
PS 561
ARRESTO CICLO
CYCLE STOP
PS 564
ISOLATORE DISINS.
ISOLATOR OFF
PS 1
CONTROLLO DISIN. INSER.
CONTROL OFF ON
SL 4
CONTROLLO INSER.
CONTROL POWER ON
LS 4
CAMBIO PEZZO MAN. AUTO.
PART CHANGE MAN AUTO
SL567
ARRESTO EMERGENZA
EMERGENCY STOP
PS 3
V025670
PARAMETER CHANGE NORMAL CHANGE
SL 565
EXTREME LIMIT OVERRIDE
PS 611
SERVO BRAKE OVERRIDE
PS 2
CAMBIO PARAMETRI NOR. CAMBIO
ANNULLA LIMITI ESTREMI
ANNULLA FRENO SERVO
AVVIO CICLO
CYCLE START
PS 562
ELENCO PARTI LAMP. DI STATO
STATUS LAMP PARTS LIST:
V020963 x 1
V021121 x 1
V025438 x 1
V020964 x 1
V020968 x 3
X115989 x 1
LS 832
LS 834
LS 835
AVVIO CICLO
CYCLE START
PS 563
MMI 1
W124585
V018718
STAZIONE 'JOG' PORTATILE
V028756
PORTABLE JOG STATION SEE SHEET No 88.
CALIBRO MISURA E POSIZIONATORE
G1 SIZE AND LOCATION GAUGE Z127846
REGISTRATORE A DISCO CRISTIE
DR1 CRISTIE DISC RECORDER V901265
PRESE DI SERVIZIO E DATI
POWER AND DATA PLATE W119468
PR1
TO SYSTEM 3200 SLOT 7
SIZE AND LOCATION GAUGE
CALIBRO MISURA E POSIZIONATORE
CRISTIE DISC RECORDER
REGISTRATORE A DISCO CRISTIE
V025670 (3U) PLATE
POWER AND DATA PLATE (3U)
PRESE DI SERVIZIO E DATI
V025670 (3U) PLATE
V025670 (3U) PLATE
NOTE: (G1) MARPOSS PLUG'S K7, K9 & K10 ARE WIRED BACK TO THE CONSOLE PLUG'S. (MARPOSS CABLE COMMON'S.)
STAZIONE 'JOG' MORSETTI
NOTE: (*) JOG STATION TERMINALS.
CONSOLE TERMINAL BOX 'H'. MORSETT. CONSOLE 'H'.
MOUNT ON PLUG PLATE.
PR-SP 100H 110/220V A.C.
PR-SP 101H 24V D.C.
PR-SP 102H 24V D.C.
PR-SP 103H 24V D.C.
PR-SP 104H 24V D.C.
PR-SP 105H 24V D.C.
PR-SP 106H 24V D.C.
EARTH RAIL GB12: E14.
MORS. DI TERRA, GB12 E14.
DRAWN RDP
CHECKED
APPROVED
LAYOUT APP'D
NAME JJC
DATE 24.1.97
C.I. MNU775
CHANGES
TITLE
MACHINE WIRING.
DIAGRAMMA CAVI DELLA MACCHINA
M/C No 318-89
FMA
EY01529
MICROFILM
REF.DRG -
SHEET 122
SHEETS 150

19 FEB 97 08.00

CHANGES	NAME	DATE	C.I.
	KE	17-02-97	W/O 97032
	KE	17-02-97	W/O 96950
	KE	17-02-97	W/O 96607
	KE	17-02-97	W/O 97645
	KE	17-02-97	W/O 97662
	KE	17-02-97	W/O 97287
	KE	17-02-97	W/O 97883
	KE	17-02-97	W/O 96896

DRAWN: ROP

CHECKED:

APPROVED:

LAYOUT APP'D:

TITLE

SPARE SHEET.

FOGLIO DISCARTA

M/C No 318-89

FMA

EY01529

MICROFILM

REF. DRG -

SHEET 123

SHEETS 150

19 FEB 97 08.00

CABLE No.	PART No.	DESCRIPTION. *ENGLISH.*	LABEL TYPE	A54 LENGTH ON MACHINE	B54 LENGTH IN CABINET	054 TRUNKING END TO + M/C DEVICE	054 TRUNKING LENGTH	054 TRUNKING END TO = CAB DEVICE	054 LENGTH CABINET TO M/C
1	X124635	LANDIS SYSTEM 3200 (SLOT 3). TO THE TERMINAL RAIL IN CABINET 2.	B	-	3.50M	-	-	-	-
* 2	X124637	LANDIS SYSTEM 3200 (SLOT 19). TO THE MACHINE JUNCTION BOX `A'.	B	-	-	2.5M	7.0M	5.0M	14.5M
* 2A	X119556	PR-SP2A MACHINE JUNCTION BOX `A'. TO THE HMI.	B	7.0M	-	-	-	-	-
* 3	X119459	LANDIS SYSTEM 3200 (SLOT 7). TO THE CONSOLE PLUG (PR-SP3H)	B	-	-	6.0M	7.0M	5.0M	18.0M
* 3A	X119461	CONSOLE PLUG PR-SP3H. TO THE CRISTIE (DR1)	B	2.0M	-	-	-	-	-
4	X124420	I/O 1 TO THE LANDIS SYSTEM 3200. (SLOT No 23).	B	-	2.85M	-	-	-	-
5	X124420	I/O 2 TO THE LANDIS SYSTEM 3200. (SLOT No 23).	B	-	2.90M	-	-	-	-
6	X124420	I/O 3 TO THE LANDIS SYSTEM 3200. (SLOT No 23).	B	-	2.95M	-	-	-	-
7	X124420	I/O 4 TO THE LANDIS SYSTEM 3200. (SLOT No 23).	B	-	3.00M	-	-	-	-
8	X124420	I/O 5 TO THE LANDIS SYSTEM 3200. (SLOT No 27).	B	-	3.00M	-	-	-	-
9	X124420	I/O 6 TO THE LANDIS SYSTEM 3200. (SLOT No 27).	B	-	3.10M	-	-	-	-
10	X124420	I/O 7 TO THE LANDIS SYSTEM 3200. (SLOT No 27).	B	-	3.15M	-	-	-	-
11	X124420	I/O 8 TO THE LANDIS SYSTEM 3200. (SLOT No 27).	B	-	3.20M	-	-	-	-
12	X124420	I/O 9 TO THE LANDIS SYSTEM 3200. (SLOT No 31).	B	-	3.25M	-	-	-	-
13	X124420	I/O 10 TO THE LANDIS SYSTEM 3200. (SLOT No 31).	B	-	3.30M	-	-	-	-
14	X124420	I/O 11 TO THE LANDIS SYSTEM 3200. (SLOT No 31).	B	-	3.35M	-	-	-	-
15	X124420	I/O 12 TO THE LANDIS SYSTEM 3200. (SLOT No 31).	B	-	3.40M	-	-	-	-
16	X119453	TDM1 TO THE LANDIS SYSTEM 3200. (SLOT No 39).	B	-	4.00M	-	-	-	-
17	X119453	TDM2 TO THE LANDIS SYSTEM 3200. (SLOT No 51).	B	-	4.10M	-	-	-	-
18	X119453	TDM3 TO THE LANDIS SYSTEM 3200. (SLOT No 39).	B	-	4.20M	-	-	-	-
19	X119453	TDM4 TO THE LANDIS SYSTEM 3200. (SLOT No 43).	B	-	4.30M	-	-	-	-
20	X119453	TDM5 TO THE LANDIS SYSTEM 3200. (SLOT No 43).	B	-	4.40M	-	-	-	-
21	X119453	TDM6 TO THE LANDIS SYSTEM 3200. (SLOT No 55).	B	-	4.50M	-	-	-	-
22	X119453	TDM7 TO THE LANDIS SYSTEM 3200. (SLOT No 55).	B	-	4.60M	-	-	-	-
23	X119453	TDM8 TO THE LANDIS SYSTEM 3200. (SLOT No 47).	B	-	3.50M	-	-	-	-
24	X119453	TDM9 TO THE LANDIS SYSTEM 3200. (SLOT No 47).	B	-	3.60M	-	-	-	-
25	X119453	TDM10 TO THE LANDIS SYSTEM 3200. (SLOT No 51).	B	-	3.70M	-	-	-	-
* 26	X119367	LANDIS SYSTEM 3200 (SLOT 39) TO THE MACHINE JUNCTION BOX `A'.	B	-	-	2.5M	7.0M	5.0M	14.5M
* 26A	X119457	JUNCTION BOX `A' TO THE HEADSTOCK ENCODER (E9).	B	9.3M	-	-	-	-	-
* 27	X119367	LANDIS SYSTEM 3200 (SLOT 39) TO THE MACHINE JUNCTION BOX `A'.	B	-	-	2.5M	7.0M	5.0M	14.5M
* 27A	X118910	JUNCTION BOX `A' TO THE WHEELFEED ENCODER (E7).	B	1.8M	-	-	-	-	-
* 28	X119367	LANDIS SYSTEM 3200 (SLOT 43) TO THE MACHINE JUNCTION BOX `A'.	B	-	-	2.5M	7.0M	5.0M	14.5M
* 28A	X120021	JUNCTION BOX `A' TO THE No1 WORKREST LOWER JAW ENCODER (E11).	B	8.1M	-	-	-	-	-
* 29	X119367	LANDIS SYSTEM 3200 (SLOT 43) TO THE MACHINE JUNCTION BOX `A'.	B	-	-	2.5M	7.0M	5.0M	14.5M
* 29A	X120021	JUNCTION BOX `A' TO THE No1 WORKREST TOP JAW ENCODER (E10).	B	8.1M	-	-	-	-	-
* 30	X131536	LANDIS SYSTEM 3200 (SLOT 47) TO THE REAR TRUNKING.	B	-	-	2.5M	7.0M	5.0M	14.5M
* 30A	X131537	REAR TRUNKING TO THE WHEELHEAD (EXE1).	B	5.5M	-	-	-	-	-
30B	X129938	(EXE1) TO THE DIAMOND FEED LINEAR ENCODER (E15).	B	1.4M	-	-	-	-	-
* 31	X119367	LANDIS SYSTEM 3200 (SLOT 47) TO THE REAR TRUNKING.	B	-	-	3.0M	7.0M	5.0M	15.0M
* 31A	X130865	REAR TRUNKING TO THE WHEELHEAD TERMINAL BOX `D'.	B	3.8M	-	-	-	-	-
31B	------	TERMINAL BOX `D' TO THE DRESSER TRAVERSE ENCODER (E14).	B	-	-	-	-	-	-
* 32	X119367	LANDIS SYSTEM 3200 (SLOT 51) TO THE MACHINE JUNCTION BOX `A'.	B	-	-	2.5M	7.0M	5.0M	14.5M
* 32A	X119457	JUNCTION BOX `A' TO THE CARRIAGE ENCODER (E8).	B	7.2M	-	-	-	-	-
* 33	X119367	LANDIS SYSTEM 3200 (SLOT 51) TO THE REAR TRUNKING.	B	-	-	3.0M	7.0M	5.0M	15.0M
* 33A	X118910	REAR TRUNKING TO THE TAPER COMPENSATOR ENCODER (E16).	B	6.0M	-	-	-	-	-
* 34	X119367	LANDIS SYSTEM 3200 (SLOT 55) TO THE MACHINE JUNCTION BOX `A'.	B	-	-	2.5M	7.0M	5.0M	14.5M
* 34A	X120021	JUNCTION BOX `A' TO THE No2 WORKREST LOWER JAW ENCODER (E13).	B	7.5M	-	-	-	-	-
* 35	X119367	LANDIS SYSTEM 3200 (SLOT 55) TO THE MACHINE JUNCTION BOX `A'.	B	-	-	2.5M	7.0M	5.0M	14.5M
* 35A	X120021	JUNCTION BOX `A' TO THE No2 WORKREST TOP JAW ENCODER (E12)	B	7.5M	-	-	-	-	-
* 36		LANDIS SYSTEM 3200 (SLOT 59) TO THE CONSOLE. (CABLE No1).	B	-	-	6.0M	7.0M	5.0M	18.0M
* 36A	M131017	CONSOLE TO THE DRESSER STATION. (CABLE No2).	B	8.0M	-	-	-	-	-
36B		DRESSER STATION TO JUNCTION BOX `A'. (CABLE No3)	B	2.0M	-	-	-	-	-
* 37	X119367	LANDIS SYSTEM 3200 (SLOT 59) TO THE REAR TRUNKING.	B	-	-	3.0M	7.0M	5.0M	15.0M
* 37A	X118910	REAR TRUNKING TO THE WHEEL SPEED MONITOR ENCODER (E18).	B	6.5M	-	-	-	-	-
* 38	X118903	TDM8 TO THE REAR TRUNKING.	B	-	-	3.0M	7.0M	3.6M	13.6M
* 38A	X118911	REAR TRUNKING TO THE DRESSER TRAVERSE TACHO (T14).	B	3.7M	-	-	-	-	-
* 39	X118903	TDM9 TO THE REAR TRUNKING.	B	-	-	3.0M	7.0M	3.7M	13.7M
* 39A	X118911	REAR TRUNKING TO THE DIAMOND FEED TACHO (T15).	B	5.5M	-	-	-	-	-
* 40	X118903	TDM10 TO THE REAR TRUNKING.	B	-	-	3.0M	7.0M	3.8M	13.8M
* 40A	X118911	REAR TRUNKING TO THE TAPER COMPENSATOR TACHO (T16).	B	6.0M	-	-	-	-	-
* 41	X118903	TDM4 TO THE MACHINE JUNCTION BOX `A'.	B	-	-	2.5M	7.0M	4.3M	13.8M
* 41A	X119458	JUNCTION BOX "A" TO THE No1 WORKREST TOP JAW TACHO (T10).	B	8.1M	-	-	-	-	-
* 42	X118903	TDM5 TO THE MACHINE JUNCTION BOX `A'.	B	-	-	2.5M	7.0M	4.4M	13.9M
* 42A	X119458	JUNCTION BOX "A" TO THE No1 WORKREST LOWER JAW TACHO (T11).	B	8.0M	-	-	-	-	-
* 43	X118903	TDM6 TO THE MACHINE JUNCTION BOX `A'.	B	-	-	2.5M	7.0M	4.6M	14.1M
* 43A	X119458	JUNCTION BOX "A" TO THE No2 WORKREST TOP JAW TACHO (T12).	B	7.5M	-	-	-	-	-
* 44	X118903	TDM7 TO THE MACHINE JUNCTION BOX `A'.	B	-	-	2.5M	7.0M	4.8M	14.3M
* 44A	X119458	MACHINE JUNCTION BOX "A" TO THE No2 WORKREST LOWER JAW TACHO (T13).	B	7.5M	-	-	-	-	-
* 45	X118903	TDM3 TO THE MACHINE JUNCTION BOX `A'.	B	-	-	2.5M	7.0M	4.2M	13.7M
* 45A	X119458	MACHINE JUNCTION BOX "A" TO THE HEADSTOCK TACHO (T9).	B	9.3M	-	-	-	-	-
* 46	X118903	TDM2 TO THE MACHINE JUNCTION BOX `A'.	B	-	-	2.5M	7.0M	4.1M	13.6M
* 46A	X119458	MACHINE JUNCTION BOX "A" TO THE CARRIAGE TACHO (T8).	B	7.2M	-	-	-	-	-
* 47	X118903	TDM1 TO THE MACHINE JUNCTION BOX `A'.	B	-	-	2.5M	7.0M	4.0M	13.5M
* 47A	X118911	MACHINE JUNCTION BOX "A" TO THE WHEELFEED TACHO (T7).	B	1.5M	-	-	-	-	-
48	X126083	LANDIS SYSTEM 3200 TO THE RAC1 CONTROLLER.	B	-	4.00M	-	-	-	-
49	X119552	RAC1 CONTROLLER TO THE CABINET TERMINAL RAIL.	B	-	1.40M	-	-	-	-
50	X119554	RAC1 TO THE REAR TRUNKING.	B	-	-	3.0M	7.0M	3.4M	13.4M
50A	X119555	REAR TRUNKING TO THE WHEEL ENCODER (1A).	B	4.3M	-	-	-	-	-
51A	X119456	DRESSER TRAVERSE MOTOR (M14) TO THE REAR TRUNKING.	B	9.5M	-	-	-	-	-
52A	X119456	DIAMOND FEED MOTOR (M15) TO THE REAR TRUNKING.	B	8.0M	-	-	-	-	-
53A	X119660	TAPER COMPENSATOR MOTOR (M16) TO THE REAR TRUNKING.	B	10.0M	-	-	-	-	-
54A	X119660	No1 WORKREST TOP JAW MOTOR (M10) TO JUNCTION BOX `A'.	B	11.0M	-	-	-	-	-
55A	X119660	No1 WORKREST LOWER JAW MOTOR (M11) TO JUNCTION BOX `A'.	B	11.0M	-	-	-	-	-
56A	X119660	No2 WORKREST TOP JAW MOTOR (M12) TO JUNCTION BOX `A'.	B	10.0M	-	-	-	-	-
57A	X119660	No2 WORKREST LOWER JAW MOTOR (M13) TO JUNCTION BOX `A'.	B	10.0M	-	-	-	-	-
58A	X119456	HEADSTOCK MOTOR (M9) TO MACHINE JUNCTION BOX `A'.	B	12.5M	-	-	-	-	-
59A	X119660	CARRIAGE TRAVERSE MOTOR (M8) TO MACHINE JUNCTION `A'.	B	10.0M	-	-	-	-	-
60A	X119551	WHEELFEED MOTOR (M7) TO MACHINE JUNCTION BOX `A'.	B	4.0M	-	-	-	-	-
61	X127475	PLUG K7 MARPOSS GAUGE TO THE CONSOLE PLUG RAIL.	B	2.5M	-	-	-	-	-
62	X127475	PLUG K9 MARPOSS GAUGE TO THE CONSOLE PLUG RAIL.	B	2.5M	-	-	-	-	-
63	X127475	PLUG 10 MARPOSS GAUGE TO THE CONSOLE PLUG RAIL..	B	2.5M	-	-	-	-	-
-	-	-	-	-	-	-	-	-	-
-	-	-	-	-	-	-	-	-	-
-	-	-	-	-	-	-	-	-	-

NOTE: ALL CABLES MARKED WITH (*), TO BE ISOLATED FROM ALL THE OTHER CABLES IN THE TRUNKING.

NOTE: (LABEL TYPE).
'P' PARTEX (ONLY USED ON CUSTOMER REQUEST).
'M' MURRELEKTRONIK.
'B' BRADY

DRAWN RDP							KE	KE	KE	KE	KE	KE	KE	KE	NAME
CHECKED							17-02-97	17-02-97	17-02-97	17-02-97	17-02-97	17-02-97	17-02-97	17-02-97	DATE
APPROVED							W/O 95896	W/O 97833	W/O 92287	W/O 97663	W/O 97545	W/O 96907	W/O 96950	W/O 97032	C.I.
LAYOUT APP'D															

CHANGES

TITLE

CABLE LIST.

ELEMCO CAVI

M/C No 318-89

FMA

EY01529

MICROFILM

REF. DRG —

SHEET 124

SHEETS 150

19 FEB 97 08.00

		ITALIAN.	A54 LUNGHEZZA SULLA MACCHINA	B54 LUNGHEZZA SULLA CABINA	054 DA FINE CANAL. A DISP. M/C +	LUNGHEZZA CANAL. +	DA FINE CANAL. A DISP CABINE =	LUNGHEZZA DA CABINE A M/C.
1	X124636	DAL SISTEMA LANDIS 3200 (SLOT 3), ALLA MORSETTIERA IN CABINA N.3	-	3.50M	-	-	-	-
* 2	X124637	DAL SISTEMA LANDIS 3200 (SLOT 19), ALLA SCATOLA DI GIUNZIONE MACCHINA 'A'	-	-	2.5M	7.0M	5.0M	14.5M
* 2A	X119556	DA PA-SP2A SCATOLA DI GIUNZIONE MACCHINA 'A', ALLA M.M.I.	7.0M	-	-	-	-	-
* 3	X119459	DAL SISTEMA LANDIS 3200 (SLOT 7), ALLA CONSOLE (PA-SP3A)	-	-	6.0M	7.0M	5.0M	18.0M
* 3A	X119461	DALLA CONSOLE PA-SP3A, AL CRISTIE (DA1)	2.0M	-	-	-	-	-
4	X124420	DA I/O 1 AL SISTEMA, LANDIS 3200. (SLOT N.23)	-	2.85M	-	-	-	-
5	X124420	DA I/O 2 AL SISTEMA, LANDIS 3200. (SLOT N.23)	-	2.90M	-	-	-	-
6	X124420	DA I/O 3 AL SISTEMA, LANDIS 3200. (SLOT N.23)	-	2.95M	-	-	-	-
7	X124420	DA I/O 4 AL SISTEMA, LANDIS 3200. (SLOT N.23)	-	3.00M	-	-	-	-
8	X124420	DA I/O 5 AL SISTEMA, LANDIS 3200. (SLOT N.27)	-	3.00M	-	-	-	-
9	X124420	DA I/O 6 AL SISTEMA, LANDIS 3200. (SLOT N.27)	-	3.10M	-	-	-	-
10	X124420	DA I/O 7 AL SISTEMA, LANDIS 3200. (SLOT N.27)	-	3.15M	-	-	-	-
11	X124420	DA I/O 8 AL SISTEMA, LANDIS 3200. (SLOT N.27)	-	3.20M	-	-	-	-
12	X124420	DA I/O 9 AL SISTEMA, LANDIS 3200. (SLOT N.31)	-	3.25M	-	-	-	-
13	X124420	DA I/O 10 AL SISTEMA, LANDIS 3200. (SLOT N.31)	-	3.30M	-	-	-	-
14	X124420	DA I/O 11 AL SISTEMA, LANDIS 3200. (SLOT N.31)	-	3.35M	-	-	-	-
15	X124420	DA I/O 12 AL SISTEMA, LANDIS 3200. (SLOT N.31)	-	3.40M	-	-	-	-
16	X119453	DA TON1 AL SISTEMA, LANDIS 3200. (SLOT N.39)	-	4.00M	-	-	-	-
17	X119453	DA TON2 AL SISTEMA, LANDIS 3200. (SLOT N.51)	-	4.10M	-	-	-	-
18	X119453	DA TON3 AL SISTEMA, LANDIS 3200. (SLOT N.39)	-	4.20M	-	-	-	-
19	X119453	DA TON4 AL SISTEMA, LANDIS 3200. (SLOT N.43)	-	4.30M	-	-	-	-
20	X119453	DA TON5 AL SISTEMA, LANDIS 3200. (SLOT N.43)	-	4.40M	-	-	-	-
21	X119453	DA TON6 AL SISTEMA, LANDIS 3200. (SLOT N.55)	-	4.50M	-	-	-	-
22	X119453	DA TON7 AL SISTEMA, LANDIS 3200. (SLOT N.55)	-	4.60M	-	-	-	-
23	X119453	DA TON8 AL SISTEMA, LANDIS 3200. (SLOT N.47)	-	3.50M	-	-	-	-
24	X119453	DA TON9 AL SISTEMA, LANDIS 3200. (SLOT N.47)	-	3.60M	-	-	-	-
25	X119453	DA TON10 AL SISTEMA, LANDIS 3200. (SLOT N.51)	-	3.70M	-	-	-	-
* 26	X119367	DAL SISTEMA LANDIS 3200 (SLOT 39) ALLA SCATOLA DI GIUNZIONE M/C 'A'	-	-	2.5M	7.0M	5.0M	14.5M
* 26A	X119457	DALLA SCATOLA DI GIUNZIONE 'A' ALL' ENCODER ROTAZIONE PEZZO (E9)	9.3M	-	-	-	-	-
* 27	X119367	DAL SISTEMA LANDIS 3200 (SLOT 39) ALLA SCATOLA DI GIUNZIONE M/C 'A'	-	-	2.5M	7.0M	5.0M	14.5M
* 27A	X118910	DALLA SCATOLA DI GIUNZIONE 'A' ALL' ENCODER AVANZAM. MOLA (E7)	1.8M	-	-	-	-	-
* 28	X119367	DAL SISTEMA LANDIS 3200 (SLOT 43) ALLA SCATOLA DI GIUNZIONE M/C 'A'	-	-	2.5M	7.0M	5.0M	14.5M
* 28A	X120021	DALLA SCATOLA DI GIUNZIONE 'A' ALL' ENCODER LUNETTA 1 PATTINO INF. (E11)	8.1M	-	-	-	-	-
* 29	X119367	DAL SISTEMA LANDIS 3200 (SLOT 43) ALLA SCATOLA DI GIUNZIONE M/C 'A'	-	-	2.5M	7.0M	5.0M	14.5M
* 29A	X120021	DALLA SCATOLA DI GIUNZIONE 'A' ALL' ENCODER LUNETTA 1 PATTINO SUP.	8.1M	-	-	-	-	-
* 30	X131536	DAL SISTEMA LANDIS 3200 (SLOT 47) ALLA CANALINA POSTERIORE (E10)	-	-	2.5M	7.0M	5.0M	14.5M
* 30A	X131537	DALLA CANAL. POSTERIORE AL (EXE 1)	5.5M	-	-	-	-	-
30B	X129933	DA (EXE 1) ALL' ENCODER AVANZAM. DIAMANTE (E15)	1.4M	-	-	-	-	-
* 31	X119367	DAL SISTEMA LANDIS 3200 (SLOT 47) ALLA CANALINA POSTERIORE	-	-	3.0M	7.0M	5.0M	15.0M
* 31A	X130865	DALLA CANALINA POSTERIORE ALL T.P.M. MORSETTI 'D'	3.8M	-	-	-	-	-
31B	------	T.P.M. MORSETTI 'D' ALL' ENCODER TRAVERSA DIAMANTE (E14)	-	-	-	-	-	-
* 32	X119367	DAL SISTEMA LANDIS 3200 (SLOT 51) ALLA SCATOLA DI GIUNZIONE M/C 'A'	-	-	2.5M	7.0M	5.0M	14.5M
* 32A	X119457	DALLA SCATOLA DI GIUNZIONE 'A' ALL' ENCODER TAVOLA (E8)	7.2M	-	-	-	-	-
* 33	X119367	DAL SISTEMA LANDIS 3200 (SLOT 51) ALLA CANALINA POSTERIORE	-	-	3.0M	7.0M	5.0M	15.0M
* 33A	X118910	DALLA CANALINA POSTERIORE ALL' ENCODER COMPENSATORE CONICITA (E16)	6.0M	-	-	-	-	-
* 34	X119367	DAL SISTEMA LANDIS 3200 (SLOT 55) ALLA SCATOLA DI GIUNZIONE M/C 'A'	-	-	2.5M	7.0M	5.0M	14.5M
* 34A	X120021	DALLA SCATOLA DI GIUNZIONE 'A' ALL' ENCODER LUNETTA 2 PATTINO INFER. (E13)	7.5M	-	-	-	-	-
* 35	X119367	DAL SISTEMA LANDIS 3200 (SLOT 55) ALLA SCATOLA DI GIUNZIONE M/C 'A'	-	-	2.5M	7.0M	5.0M	14.5M
* 35A	X120021	DALLA SCATOLA DI GIUNZIONE 'A' ALL' ENCODER LUNETTA 2 PATTINO SUP. (E12)	7.5M	-	-	-	-	-
* 36		DAL SISTEMA LANDIS 3200 (SLOT 59) ALLA CONSOLE. (CAVO N.1)	-	-	6.0M	7.0M	5.0M	18.0M
* 36A	W131017	DALLA CONSOLE ALLA STAZIONE RAVVIVATURA. (CAVO N.2)	8.0M	-	-	-	-	-
36B		DALLA STAZIONE RAVVIVATORE ALLA SCATOLA DI GIUNZIONE 'A' (CAVO N.3)	2.0M	-	-	-	-	-
* 37	X119367	DAL SISTEMA LANDIS LUND 3200 (SLOT 59) ALLA CANALINA POSTERIORE	-	-	3.0M	7.0M	5.0M	15.0M
* 37A	X118910	DALLA CANALINA POSTERIORE ALL' ENCODER MONITOR VELOCITA MOLA (E10)	6.5M	-	-	-	-	-
* 38	X118903	DA TON8 ALLA CANALINA POSTERIORE	-	-	3.0M	7.0M	3.6M	13.6M
* 38A	X118911	DALLA CANALINA POSTERIORE ALLA TACHIM. TRAVERSA RAVVIVAT. (T14)	3.7M	-	-	-	-	-
* 39	X118903	DA [illegible] ALLA CANALINA POSTERIORE	-	-	3.0M	7.0M	3.7M	13.7M
* 39A	X118911	DALLA CANALINA ALLA TACHIM. AVANZAM. DIAMANTE (T15)	5.5M	-	-	-	-	-
* 40	X118903	DA TON10 ALLA CANALINA POSTERIORE	-	-	3.0M	7.0M	3.8M	13.8M
* 40A	X118911	DALLA CANALINA POSTERIORE ALLA TACHIM. COMPENSATORE CONICITA (T16)	6.0M	-	-	-	-	-
* 41	X118903	DA [illegible] ALLA SCATOLA DI GIUNZIONE MACCHINA 'A'	-	-	2.5M	7.0M	4.3M	13.8M
* 41A	X119458	DALLA SCATOLA DI GIUNZIONE 'A' ALLA TACHIM. LUNETTA N.1 PATTINO SUP. (T10)	8.1M	-	-	-	-	-
* 42	X118903	DA TON5 ALLA SCATOLA DI GIUNZIONE MACCHINA 'A'	-	-	2.5M	7.0M	4.4M	13.9M
* 42A	X119458	DALLA SCATOLA DI GIUNZIONE 'A' ALLA TACHIM. LUNETTA N.1 PATTINO INF. (T11)	8.0M	-	-	-	-	-
* 43	X118903	DA TON6 ALLA SCATOLA DI GIUNZIONE MACCHINA 'A'	-	-	2.5M	7.0M	4.6M	14.1M
* 43A	X119458	DALL SCATOLA DI GIUNZIONE 'A' ALLA TACHIM. LUNETTA N.2 PATTINO SUP. (T12)	7.5M	-	-	-	-	-
* 44	X118903	DA TON7 ALLA SCATOLA SCATOLA DI GIUNZIONE MACCHINA 'A'	-	-	2.5M	7.0M	4.8M	14.3M
* 44A	X119458	DALLA SCATOLA DI GIUNZIONE 'A' ALLA TACHIM. LUNETTA N.2 PATTINO INF. (T13)	7.5M	-	-	-	-	-
* 45	X118903	DA TON3 ALLA SCATOLA DI GIUNZIONE MACCHINA 'A'	-	-	2.5M	7.0M	4.2M	13.7M
* 45A	X119458	DALLA SCATOLA DI GIUNZIONE 'A' ALLA TACHIM. ROTAZIONE PEZZO (T9)	9.3M	-	-	-	-	-
* 46	X118903	DA TON2 ALLA SCATOLA DI GIUNZIONE MACCHINA 'A'	-	-	2.5M	7.0M	4.1M	13.6M
* 46A	X119458	DALLA SCATOLA DI GIUNZIONE 'A' ALLA TACHIM. TAVOLA (T8)	7.2M	-	-	-	-	-
* 47	X118903	DA TON1 ALLA SCATOLA DI GIUNZIONE MACCHINA 'A'	-	-	2.5M	7.0M	4.0M	13.5M
* 47A	X118911	DALLA SCATOLA DI GIUNZIONE 'A' ALLA TACHIM. AVANZAMENTO MOLA (T7)	1.5M	-	-	-	-	-
48	X126083	DAL SISTEMA LANDIS 3200 AL CONTROLLORE ARC1	-	4.00M	-	-	-	-
49	X119552	DAL CONTROLLORE ARC1 ALLA MORSETTIERA DI CABINA	-	1.40M	-	-	-	-
50	X119554	DA ARC1 ALLA CANALINA POSTERIORE	-	-	3.0M	7.0M	3.4M	13.4M
50A	X119555	DALLA CANALINA POSTERIORE ALL' ENCODER MOLA (E10)	4.3M	-	-	-	-	-
51A	X119456	DAL MOTORE TRAVERSA RAVVIVATORE (M14) ALLA CANALINA POSTERIORE	9.5M	-	-	-	-	-
52A	X119456	DAL MOTORE AVANZAMENTO DIAMANTE (M15) ALLA CANALINA POSTERIORE	8.0M	-	-	-	-	-
53A	X119660	DAL MOTORE COMPENSATORE CONICITA (M16) ALLA CANALINA POSTERIORE	10.0M	-	-	-	-	-
54A	X119660	DAL MOTORE LUNETTA N.1 PATTINO SUP. (M10) ALLA SCATOLA DI GIUNZIONE 'A'	11.0M	-	-	-	-	-
55A	X119660	DAL MOTORE LUNETTA N.1 PATTINO INF. (M11) ALLA SCATOLA DI GIUNZIONE 'A'	11.0M	-	-	-	-	-
56A	X119660	DAL MOTORE LUNETTA N.2 PATTINO SUP. (M12) ALLA SCATOLA DI GIUNZIONE 'A'	10.0M	-	-	-	-	-
57A	X119660	DAL MOTORE LUNETTA N.2 PATTINO INF. (M13) ALLA SCATOLA DI GIUNZIONE 'A'	10.0M	-	-	-	-	-
58A	X119456	DAL MOTORE ROTAZIONE PEZZO (M9) ALLA SCATOLA DI GIUNZIONE 'A'	12.5M	-	-	-	-	-
59A	X119660	DAL MOTORE TAVOLA (M8) ALLA SCATOLA DI GIUNZIONE MACCHINE 'A'	10.0M	-	-	-	-	-
60A	X119551	DAL MOTORE AVANZAM. MOLA (M7) ALLA SCATOLA DI GIUNZIONE MACCHINA 'A'	4.0M	-	-	-	-	-
61	X127475	DAL CONN. K7 CALIBRO MARPOSS AL CONNETT. CONSOLE	2.5M	-	-	-	-	-
62	X127475	DAL CONN. K9 CALIBRO MARPOSS AL CONNETT. CONSOLE	2.5M	-	-	-	-	-
63	X127475	DAL CONN. K10 CALIBRO MARPOSS AL CONNETT. CONSOLE	2.5M	-	-	-	-	-
-	-		-	-	-	-	-	-
-	-		-	-	-	-	-	-
-	-		-	-	-	-	-	-

CHANGES	NAME	DATE	C.I.
	KE	17-02-97	W/O 95958
	KE	17-02-97	W/O 97833
	KE	17-02-97	W/O 97287
	KE	17-02-97	W/O 37662
	KE	17-02-97	W/O 97645
	KE	17-02-97	W/O 96607
	KE	17-02-97	W/O 96950
	KE	17-02-97	W/O 97032

DRAWN RDP

CHECKED

APPROVED

LAYOUT APP'D

TITLE

CABLE LIST.

ELENCO CAVI

M/C No 318-89

FMA

EY01529

MICROFILM

REF.DRG –

SHEET 125

SHEETS 150

19 FEB 97 08.00

INTERNAL SYSTEM 3200 CABLES & INDRAMAT SERVO CABLES.

CAVI INTERNI SISTEMA 3200 E CAVI SERVO INDRAMAT

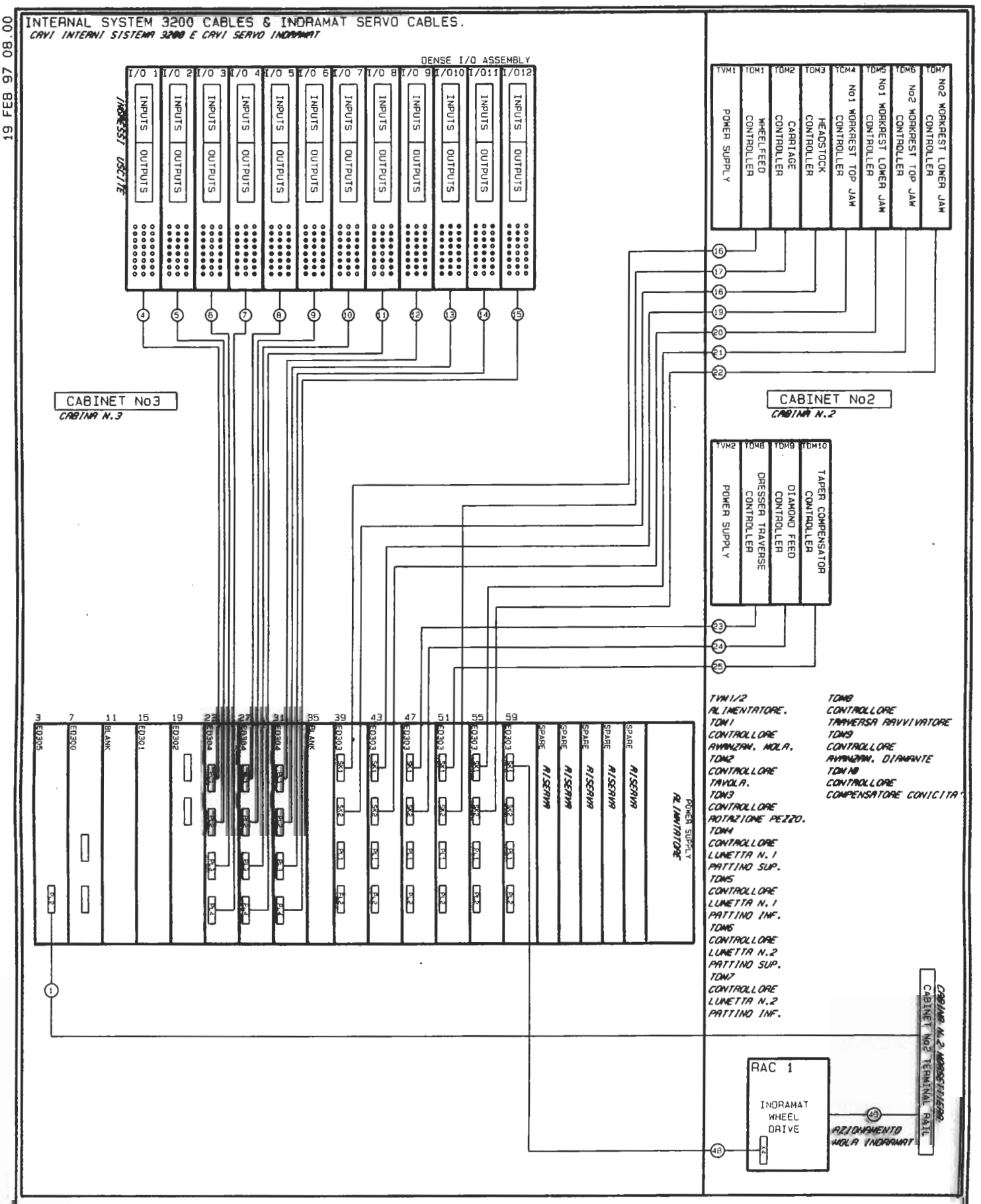

DRAWN																		
RDP																		
CHECKED																		
APPROVED																		
LAYOUT APP'D																		

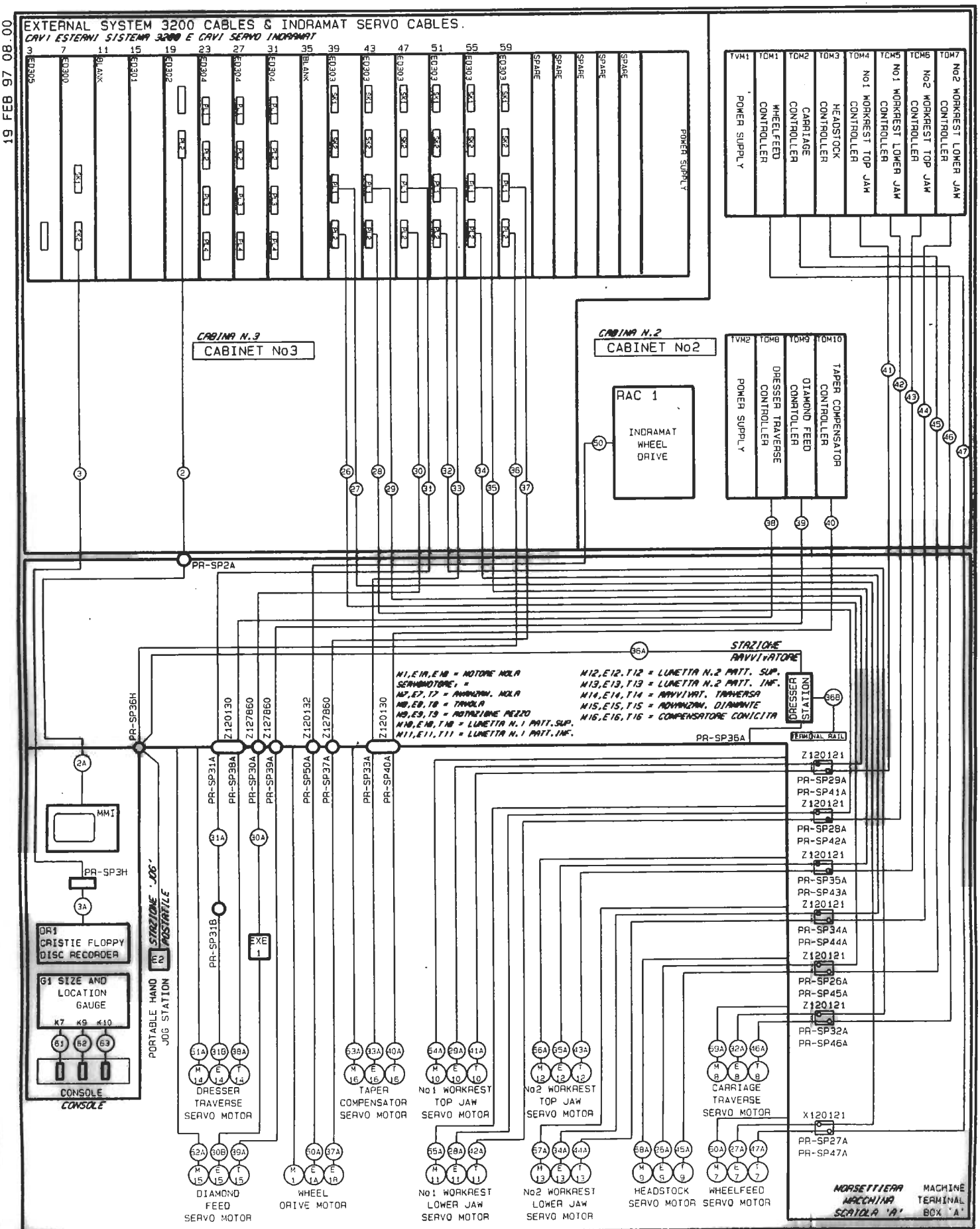
EXTERNAL SYSTEM 3200 CABLES & INDRAMAT SERVO CABLES.
CAVI ESTERNI SISTEMA 3200 E CAVI SERVO INDRAMAT
POWER SUPPLY
TVM1 POWER SUPPLY
TOM1 WHEELFEED CONTROLLER
TOM2 CARRIAGE CONTROLLER
TOM3 HEADSTOCK CONTROLLER
TOM4 No1 WORKREST TOP JAW CONTROLLER
TOM5 No1 WORKREST LOWER JAW CONTROLLER
TOM6 No2 WORKREST TOP JAW CONTROLLER
TOM7 No2 WORKREST LOWER JAW CONTROLLER
CABINA N.3
CABINET No3
CABINA N.2
CABINET No2
RAC 1
INDRAMAT WHEEL DRIVE
TVM2 POWER SUPPLY
TOM8 DRESSER TRAVERSE CONTROLLER
TOM9 DIAMOND FEED CONTROLLER
TOM10 TAPER COMPENSATOR CONTROLLER
PR-SP2A
PR-SP36H
STAZIONE AVVIATORE
DRESSER STATION
PR-SP36A
TERMINAL RAIL
MMI
PR-SP3H
DR1 CRISTIE FLOPPY DISC RECORDER
G1 SIZE AND LOCATION GAUGE
CONSOLE
PORTABLE HAND JOG STATION
STAZIONE 'JOG' POSTATILE
DRESSER TRAVERSE SERVO MOTOR
TAPER COMPENSATOR SERVO MOTOR
No1 WORKREST TOP JAW SERVO MOTOR
No2 WORKREST TOP JAW SERVO MOTOR
CARRIAGE TRAVERSE SERVO MOTOR
DIAMOND FEED SERVO MOTOR
WHEEL DRIVE MOTOR
No1 WORKREST LOWER JAW SERVO MOTOR
No2 WORKREST LOWER JAW SERVO MOTOR
HEADSTOCK SERVO MOTOR
WHEELFEED SERVO MOTOR
MORSETTIERA MACCHINA SCATOLA 'A'
MACHINE TERMINAL BOX 'A'

| | | |

19 FEB 97 08.00

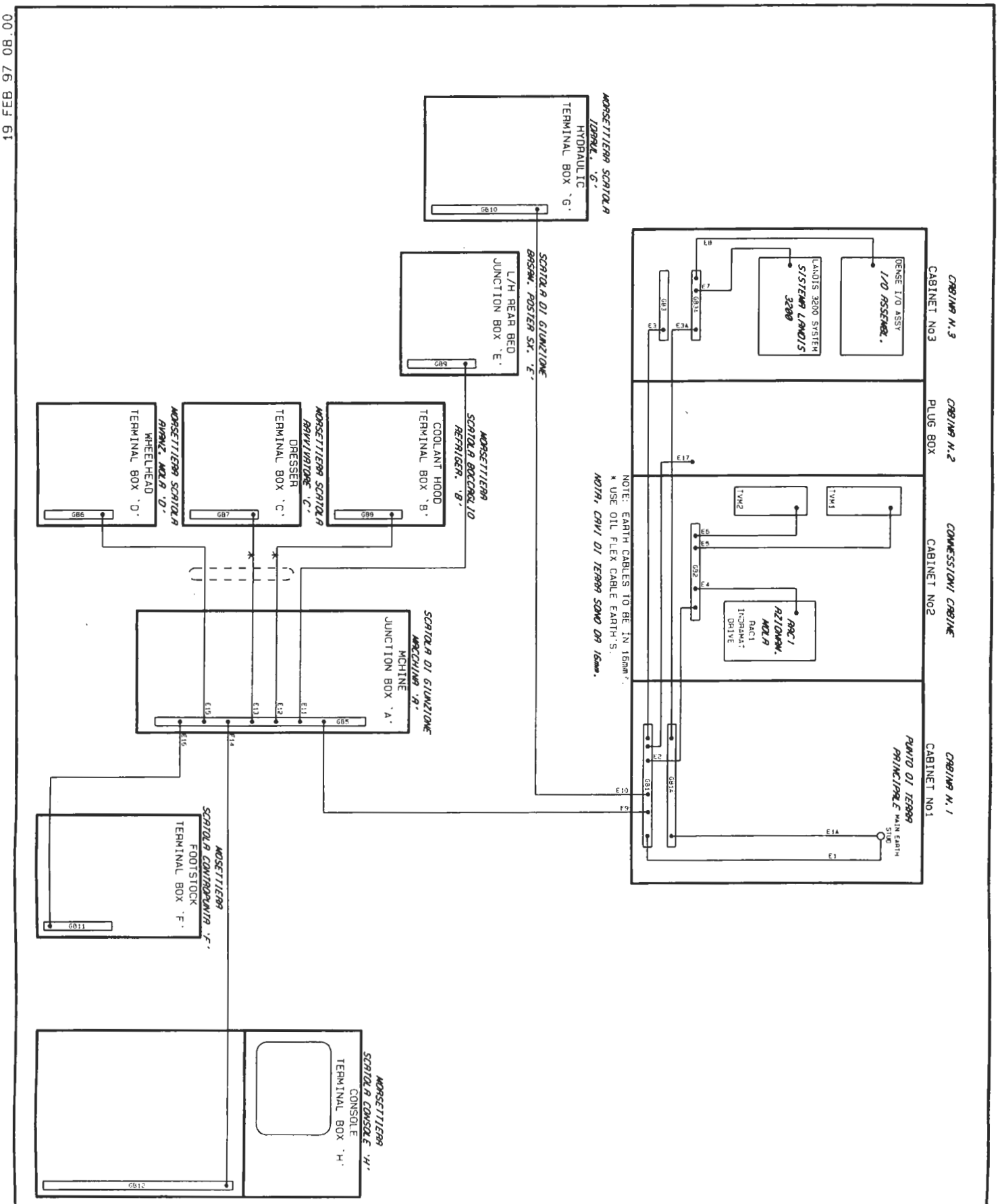

| | | |

19 FEB 97 08.00

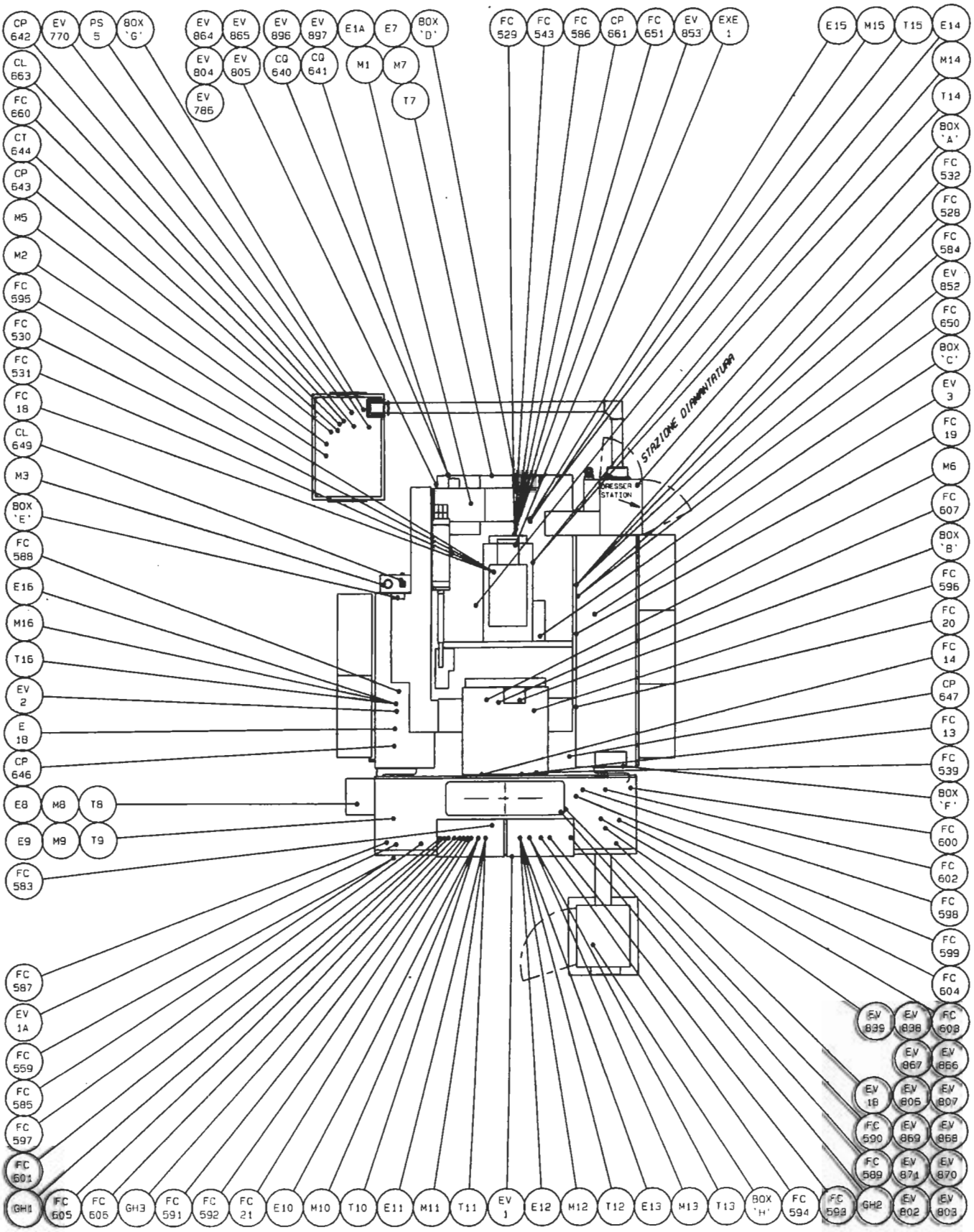

| | | |

19 FEB 97 08.00

DRAWN	RDP
CHECKED	
APPROVED	
LAYOUT APP'D	

CHANGES

NAME	DATE	C.I.
KE	17-02-97	W/O 97032
KE	17-02-97	W/O 95950
KE	17-02-97	W/O 96607
KE	17-02-97	W/O 97645
KE	17-02-97	W/O 97662
KE	17-02-97	W/O 97287
KE	17-02-97	W/O 97833
KE	17-02-97	W/O 95858

TITLE

SPARE SHEET.

FOGLI RISERVA

M/C No 318-89

FMA

EY01529

MICROFILM	
REF. DRG	—
SHEET	130
SHEETS	150

19 FEB 97 08.00

ITEM No.	DESCRIPTION *DESCRIZIONE*	MANUFACTURER *COSTRUTTORE*	CATALOGUE No. *No CATALOGO*	QTY *Q.TA*	DESIGNATION *DENOMINAZIONE*	LOCATION *POSIZIONE*	MACHINE LOCATION
	AIR CONDITIONER *CONDIZIONATORE ARIA*	RITTAL	SK 3293 V026278	1	ACU 1	14-16	
	AIR CONDITIONER *CONDIZIONATORE ARIA*	RITTAL	SK 3293 V026278	1	ACU 2	14-20	
	CAPACITOR *CONDENSATORE*	INDRAMAT	CZ02 V025054	1	CD 1	8-10	
	LEVEL SWITCH *INTERRUTTORE DI LIVELLO*	VOGEL	WS32-2/230 PART OF V028061	1	CL 649	58-6	
	FLOAT SWITCH *INTERRUTTORE GALLEGGIANTE*	VOGEL	WS32 2/290 V023341	1	CL 663	59-18	
	TACHOMETER *TACHIMETRO*	IMO	H7ER-SBV V027748	1	COU 1	34-9	
	PRESSURE SWITCH *INTERRUTTORE PRESSOSTATO*	TELEMECANIQUE	XMJ-A0127 V029691	1	CP 642	57-8	
	PRESSURE SWITCH *INTERRUTTORE PRESSOSTATO*	TELEMECANIQUE	XMJ-A0707 V029692	1	CP 643	57-10	
	PRESSURE SWITCH *INTERRUTTORE PRESSOSTATO*	TELEMECANIQUE	XMJ-A0707 V029692	1	CP 646	57-16	
	PRESSURE SWITCH *INTERRUTTORE PRESSOSTATO*	TELEMECANIQUE	XMJ-A0707 V029692	1	CP 647	57-18	
	PRESSURE SWITCH *INTERRUTTORE PRESSOSTATO*	TELEMECANIQUE	XMJ-A0707 V029692	1	CP 661	59-14	
	LANDIS SYSTEM 3200 *LANDIS SYSTEMA 3200*	CUPE	20 SLOT VME BUS RACK V901271	1	CPU 1	15-14	
	FLOW MONITOR COMPACT *FLUSSO MONITORIZZIONE*	IFM ELECTRONIC	SCR14ABAFPKGUSST2604 V029662	1	CQ 640	57-4	
	FLOW MONITOR COMPACT *FLUSSO MONITORIZZIONE*	IFM ELECTRONIC	SCR14ABAFPKGUSST2604 V029662	1	CQ 641	57-6	
	CURRENT TRANSFORMER *TRASFORMATORE CORRENTE*	Wm. DON Ltd.	TX 3004 300-0.1 V027626	1	CT 1	4-13	
	THERMOSTAT 15-65 'C *TERMOSTATO*	RITTAL	SK3112 V027405	1	CT 548	45-12	
	THERMOSTAT 15-65 'C *TERMOSTATO*	RITTAL	SK3112 V027405	1	CT 549	45-14	
	THERMOSTAT *TERMOSTATO*	DANFOSS	17-5180 V026936	1	CT 644	57-12	
	SUPPRESSOR *FILTRO SOPPRESSORE*	SIEMENS	3TX6-406-0G V020422	1	D 1	16-10	
	SUPPRESSOR *FILTRO SOPPRESSORE*	SIEMENS	3TX6-406-0G V020422	1	D 3	24-12	
	SUPPRESSOR *FILTRO SOPPRESSORE*	SIEMENS	3TX6-406-0G V020422	1	D 3A	24-15	
	SUPPRESSOR *FILTRO SOPPRESSORE*	SIEMENS	3TX6-406-0G V020422	1	D 3B	24-19	
	SUPPRESSOR *FILTRO SOPPRESSORE*	SIEMENS	3TX6-406-0G V020422	1	D 3C	25-1	
	SUPPRESSOR *FILTRO SOPPRESSORE*	SIEMENS	3TX6-406-0G V020422	1	D 30	25-4	
	SUPPRESSOR *FILTRO SOPPRESSORE*	SIEMENS	3TX6-406-0G V020422	1	D 3E	25-8	
	SUPPRESSOR *FILTRO SOPPRESSORE*	SIEMENS	3TX4490-3A V029004	1	D 4	27-1	
	SUPPRESSOR *FILTRO SOPPRESSORE*	SIEMENS	3TX4490-3A V029004	1	D 6	27-5	
	SUPPRESSOR *FILTRO SOPPRESSORE*	SIEMENS	3TX6-406-0G V020422	1	D 7	27-15	
	SUPPRESSOR *FILTRO SOPPRESSORE*	SIEMENS	3TX6-406-0G V020422	1	D 771	65-10	
	SUPPRESSOR *FILTRO SOPPRESSORE*	SIEMENS	3TX4490-3A V029004	1	D 785	66-6	
	SUPPRESSOR *FILTRO SOPPRESSORE*	SIEMENS	3TX4490-3A V029004	1	D 787	66-10	
	SUPPRESSOR *FILTRO SOPPRESSORE*	SIEMENS	3TX4490-3A V029004	1	D 788	66-12	
	SUPPRESSOR *FILTRO SOPPRESSORE*	SIEMENS	3TX6-406-0G V020422	1	D 8	27-21	

NAME	KE	KE	KE	KE	KE	KE	KE	KE
DATE	17-02-97	17-02-97	17-02-97	17-02-97	17-02-97	17-02-97	17-02-97	17-02-97
C.I.	W/O 96850	W/O 96839	W/O 97207	W/O 97662	W/O 97640	W/O 96607	W/O 96950	W/O 97032

CHANGES

DRAWN: RDP
CHECKED
APPROVED
LAYOUT APP'D

TITLE: STOCK LIST.
LISTA DEL COMPONENTI

M/C No 318-89

FMA

EY01529

MICROFILM
REF.DRG —
SHEET 131
SHEETS 150

19 FEB 97 08.00

ITEM No.	DESCRIPTION *DESCRIZIONE*	MANUFACTURER *COSTRUTTORE*	CATALOGUE No. *No CATALOGO*		QTY *Q.TA*	DESIGNATION *DENOMINAZIONE*		LOCATION *POSIZIONE*	MACHINE LOCATION
	SUPPRESSOR	SIEMENS	3TX4490-3A	V029004	1	D	D	20-1	
	FILTRO SOPPRESSORE								
	SUPPRESSOR	SIEMENS	3TX4490-3A	V029004	1	D	E	20-4	
	FILTRO SOPPRESSORE								
	SUPPRESSOR	SIEMENS	3TX4490-3A	V029004	1	D	F	20-8	
	FILTRO SOPPRESSORE								
	SUPPRESSOR	SIEMENS	3TX4490-3A	V029004	1	D	G	20-12	
	FILTRO SOPPRESSORE								
	SUPPRESSOR	SIEMENS	3TX4490-3A	V029004	1	D	H	20-15	
	FILTRO SOPPRESSORE								
	SUPPRESSOR	SIEMENS	3TX4490-3A	V029004	1	D	I	20-19	
	FILTRO SOPPRESSORE								
	SUPPRESSOR	SIEMENS	3TX4490-3A	V029004	1	D	J	21-1	
	FILTRO SOPPRESSORE								
	SUPPRESSOR	SIEMENS	3TX4490-3A	V029004	1	D	K	21-4	
	FILTRO SOPPRESSORE								
	SUPPRESSOR	SIEMENS	3TX4490-3A	V029004	1	D	L	21-8	
	FILTRO SOPPRESSORE								
	SUPPRESSOR	SIEMENS	3TX4490-3A	V029004	1	D	M	21-12	
	FILTRO SOPPRESSORE								
	SUPPRESSOR	SIEMENS	3TX4490-3A	V029004	1	D	O	21-16	
	FILTRO SOPPRESSORE								
	3 PHASE INDICATOR	CEMA UK Ltd.	105 DTL500	V014486	1	DL	1	13-4	
	INDICATORE TRIFASE								
	3 PHASE INDICATOR	CEMA UK Ltd.	105 DTL500	V014486	1	DL	1A	13-9	
	INDICATORE TRIFASE								
	3 PHASE INDICATOR	CEMA UK Ltd.	105 DTL500	V014486	1	DL	2	13-14	
	INDICATORE TRIFASE								
	DISK RECORDER ITALIAN.	CRISTIE	DS315 120/240V 50Hz	V901265	1	DR	1	30-9	
	REGISTRATORE DISCO IN ITALIANO								
	ENCODER	INDRAMAT	PART OF M10	-	1	E	10	9-15	
	ENCODER								
	ENCODER	INDRAMAT	PART OF M11	-	1	E	11	10-1	
	ENCODER								
	ENCODER	INDRAMAT	PART OF M12	-	1	E	12	10-7	
	ENCODER								
	ENCODER	INDRAMAT	PART OF M13	-	1	E	13	10-15	
	ENCODER								
	ENCODER	HEIDENHAIN	ROD 426 2500	V023350	1	E	14	11-5	
	ENCODER								
	LINEAR ENCODER	HEIDENHAIN	ULS 300C	V029727	1	E	15	11-11	
	ENCODER LINEARE								
	ENCODER	INDRAMAT	PART OF M16	-	1	E	16	12-1	
	ENCODER								
	ENCODER	HEIDENHAIN	ROD 426E	V029150	1	E	18	87-17	
	ENCODER								
	HANDWHEEL PULSE GENERATOR	EUCHNER	HKE036-100A05	V030256	1	E	2	88-16	
	STAZIONE 'JOG' PORTATILE								
	ENCODER	INDRAMAT	PART OF M7	-	1	E	7	8-13	
	ENCODER								
	ENCODER	INDRAMAT	PART OF M8	-	1	E	8	9-1	
	ENCODER								
	ENCODER	INDRAMAT	PART OF M9	-	1	E	9	9-8	
	ENCODER								
	SHOT BOLT	EUCHNER	TZ1 RA 024 (045180)	V028147+V028370	1	EV	1	29-0	
	OTTURATORE								
	SHOT BOLT	EUCHNER	TZ1 RA 024 (045180)	V028147+V028370	1	EV	1A	29-8	
	OTTURATORE								
	SHOT BOLT	EUCHNER	TZ1 RA 024 (045180)	V028147+V028370	1	EV	1B	29-16	
	OTTURATORE								
	SHOT BOLT	EUCHNER	TZ1 RA 024 (045180)	V028147+V029342	1	EV	2	20-14	
	OTTURATORE								
	SHOT BOLT	EUCHNER	TZ1 RA 024 (045180)	V028147+V029342	1	EV	3	21-3	
	OTTURATORE								
	PULSE SHAPING	HEIDENHAIN	EXE650C	V029728	1	EXE	1	11-10	
	FORMATORE D'IMPULSI								

DRAWN RDP					KE	KE	KE	KE	KE	KE	KE	KE	NAME	CHANGES	TITLE	MICROFILM
CHECKED					17-02-97	17-02-97	17-02-97	17-02-97	17-02-97	17-02-97	17-02-97	17-02-97	DATE		STOCK LIST. *LISTA DEL COMPONENTI*	REF.DRG –
APPROVED					W/O 95898	W/O 95896	W/O 97287	W/O 97862	W/O 97545	W/O 96507	W/O 96550	W/O 97032	C.I.			SHEET 132
LAYOUT APP'D															M/C No 318-89	SHEETS 150

FMA

EY01529

19 FEB 97 08.00

ITEM No.	DESCRIPTION *DESCRIZIONE*	MANUFACTURER *COSTRUTTORE*	CATALOGUE No. *No CATALOGO*		QTY *Q.TA*	DESIGNATION *DENOMINAZIONE*		LOCATION *POSIZIONE*	MACHINE LOCATION
	SWITCH 3PH INDICATOR	CEMA UK Ltd	114 FT03	V014617	1	FC	1	2-9	
	INTERRUTTORE INDICATORE TRIFASE								
	SWITCH 3PH INDICATOR	CEMA UK Ltd	114 FT03	V014617	1	FC	10	13-8	
	INTERRUTTORE INDICATORE TRIFASE								
	SWITCH 3PH INDICATOR	CEMA UK Ltd	114 FT03	V014617	1	FC	11	13-14	
	INTERRUTTORE INDICATORE TRIFASE								
	SWITCH 3PH INDICATOR	CEMA UK Ltd	114 FT03	V014617	1	FC	12	13-18	
	INTERRUTTORE INDICATORE TRIFASE								
	SAFETY LIMIT SWITCH	TELEMECANIQUE	XCL-J1629H29	V029693	1	FC	13	21-17	
	FINECORSA DI SICUREZZA								
	SAFETY LIMIT SWITCH	TELEMECANIQUE	XCL-J1629H29	V029693	1	FC	14	21-17	
	FINECORSA DI SICUREZZA								
	MICROSWITCH	HONEYWELL	3AC6	F010112	1	FC	17	3-18	
	MICROINTERRUTTORE								
	PROXIMITY SWITCH	BAUMER	IFR06.24.35/L	V028899	1	FC	18	34-11	
	INTERRUTTORE SENSITIVO								
	SAFETY LIMIT SWITCH	TELEMECANIQUE	XCL-J1629H29	V029693	1	FC	19	22-4	
	FINECORSA DI SICUREZZA								
	SWITCH 3PH INDICATOR	CEMA UK Ltd	114 FT03	V014617	1	FC	2	2-13	
	INTERRUTTORE INDICATORE TRIFASE								
	SAFETY LIMIT SWITCH	TELEMECANIQUE	XCL-J1629H29	V029693	1	FC	20	22-4	
	FINECORSA DI SICUREZZA								
	PROXIMITY SWITCH	BAUMER	IFR06.24.35/L	V028899	1	FC	21	35-12	
	INTERRUTTORE SENSITIVO								
	SWITCH 3PH INDICATOR	CEMA UK Ltd	114 FT03	V014617	1	FC	3	2-17	
	INTERRUTTORE INDICATORE TRIFASE								
	MICROSWITCH	HONEYWELL	3AC6	F010112	1	FC	5	3-6	
	MICROINTERRUTTORE								
	LIMIT SWITCH 2 LANE	BALLUFF	BNS519-D2R1610011FD	V023932	1	FC	528	43-4	
	FINECORSA 2 POLI								
	LIMIT SWITCH 2 LANE	BALLUFF	BNS519-D2R1610011FD	V023932	1	FC	529	43-6	
	FINECORSA 2 POLI								
	LIMIT SWITCH	BALLUFF	BNS519-FR60111-FD	V024463	1	FC	530	43-8	
	FINCORSA								
	LIMIT SWITCH	BALLUFF	BNS519-FR60111-FD	V024463	1	FC	531	43-10	
	FINCORSA								
	LIMIT SWITCH 2 LANE	BALLUFF	PART OF FC528	-	1	FC	532	43-12	
	FINECORSA 2 POLI								
	LIMIT SWITCH	TELEMECANIQUE	XCK-J162-H29	V024692	1	FC	539	44-10	
	FINCORSA								
	LIMIT SWITCH 2 LANE	BALLUFF	BNS519-D2R1610011FD	PART OF F529	1	FC	543	44-18	
	FINECORSA 2 POLI								
	LIMIT SWITCH	TELEMECANIQUE	XCK-J162-H29	V024692	1	FC	545	45-6	
	FINCORSA								
	LIMIT SWITCH	TELEMECANIQUE	XCK-J162-H29	V024692	1	FC	546	45-8	
	FINCORSA								
	LIMIT SWITCH	BALLUFF	BNS519-FR60111-FD	V024463	1	FC	558	46-16	
	FINCORSA								
	LIMIT SWITCH	BALLUFF	BNS519-FR60111-FD	V024463	1	FC	559	46-18	
	FINCORSA								
	PROXIMITY SWITCH	BALLUFF	BES516-326-S4C	V028988	1	FC	583	49-18	
	INTERRUTTORE SENSITIVO								
	PROXIMITY SWITCH	BALLUFF	BES516-326-S4C	V028988	1	FC	584	50-4	
	INTERRUTTORE SENSITIVO								
	PROXIMITY SWITCH	BALLUFF	BES516-326-S4C	V028988	1	FC	585	50-6	
	INTERRUTTORE SENSITIVO								
	PROXIMITY SWITCH	BALLUFF	BES516-326-S4C	V028988	1	FC	586	50-8	
	INTERRUTTORE SENSITIVO								
	PROXIMITY SWITCH	BALLUFF	BES516-326-S4C	V028988	1	FC	587	50-10	
	FINECORSA DI SICUREZZA								
	PROXIMITY SWITCH	BALLUFF	BES516-326-S4C	V028988	1	FC	588	50-12	
	FINECORSA DI SICUREZZA								
	SAFETY LIMIT SWITCH	TELEMECANIQUE	XCL-J1629H29	V029693	1	FC	589	50-14	
	FINECORSA DI SICUREZZA								
	SAFETY LIMIT SWITCH	TELEMECANIQUE	XCL-J1629H29	V029693	1	FC	590	50-16	
	FINECORSA DI SICUREZZA								

	NAME	DATE	C.I.
	KE	17-02-97	W/O 96898
	KE	17-02-97	W/O 97833
	KE	17-02-97	W/O 97287
	KE	17-02-97	W/O 97562
	KE	17-02-97	W/O 97545
	KE	17-02-97	W/O 96907
	KE	17-02-97	W/O 96550
	KE	17-02-97	W/O 97032

CHANGES

DRAWN RDP
CHECKED
APPROVED
LAYOUT APP'D

TITLE

STOCK LIST.

LISTA DEL COMPONENTI

M/C No 318-89

FMA

EY01529

MICROFILM
REF. DRG —
SHEET 133
SHEETS 150

19 FEB 97 08.00

ITEM No.	DESCRIPTION *DESCRIZIONE*	MANUFACTURER *COSTRUTTORE*	CATALOGUE No. *No CATALOGO*	QTY *Q.TA*	DESIGNATION *DENOMINAZIONE*	LOCATION *POSIZIONE*	MACHINE LOCATION
	PROXIMITY SWITCH	BALLUFF	BES516-326-S4C V028988	1	FC 591	50-18	
	INTERRUTTORE SENSITIVO						
	PROXIMITY SWITCH	BALLUFF	BES516-326-S4C V028988	1	FC 592	51-4	
	INTERRUTTORE SENSITIVO						
	PROXIMITY SWITCH	BALLUFF	BES516-326-S4C V028988	1	FC 593	51-6	
	INTERRUTTOREN SENSITIVO						
	PROXIMITY SWITCH	BALLUFF	BES516-326-S4C V028988	1	FC 594	51-8	
	INTERRUTTOREN SENSITIVO						
	PROXIMITY SWITCH	BALLUFF	BES516-326-S4C V028988	1	FC 595	51-10	
	INTERRUTTOREN SENSITIVO						
	LIMIT SWITCH	TELEMECANIQUE	XCK-J162-H29 V024692	1	FC 596	51-12	
	FINCORSA						
	PROXIMITY SWITCH	BALLUFF	BES516-326-S4C V028988	1	FC 597	51-14	
	INTERRUTTOREN SENSITIVO						
	PROXIMITY SWITCH	BALLUFF	BES516-326-S4C V028988	1	FC 598	51-16	
	INTERRUTTOREN SENSITIVO						
	PROXIMITY SWITCH	BALLUFF	BES516-326-S4C V028988	1	FC 599	51-18	
	INTERRUTTOREN SENSITIVO						
	MICROSWITCH	HONEYWELL	3AC6 F010112	1	FC 6	3-9	
	MICROINTERRUTTORE						
	PROXIMITY SWITCH	BALLUFF	BES516-326-S4C V028988	1	FC 600	52-4	
	INTERRUTTOREN SENSITIVO						
	PROXIMITY SWITCH	BALLUFF	BES516-326-S4C V028988	1	FC 601	52-6	
	INTERRUTTOREN SENSITIVO						
	PROXIMITY SWITCH	BALLUFF	BES516-326-S4C V028988	1	FC 602	52-8	
	INTERRUTTOREN SENSITIVO						
	PROXIMITY SWITCH	BALLUFF	BES516-326-S4C V028988	1	FC 603	52-10	
	INTERRUTTOREN SENSITIVO						
	PROXIMITY SWITCH	BALLUFF	BES516-326-S4C V028988	1	FC 604	52-12	
	INTERRUTTOREN SENSITIVO						
	PROXIMITY SWITCH	BALLUFF	BES516-326-S4C V028988	1	FC 605	52-14	
	INTERRUTTOREN SENSITIVO						
	PROXIMITY SWITCH	BALLUFF	BES-516-326-E5-Y-S4 V030099	1	FC 606	52-16	
	INTERRUTTOREN SENSITIVO						
	PROXIMITY SWITCH	BALLUFF	BES516-326-S4C V028988	1	FC 607	52-18	
	INTERRUTTOREN SENSITIVO						
	PROXIMITY SWITCH	BALLUFF	BES 516-325-S4C V027685	1	FC 650	58-8	
	INTERRUTTOREN SENSITIVO						
	PROXIMITY SWITCH	BALLUFF	BES 516-325-S4C V027685	1	FC 651	58-10	
	INTERRUTTOREN SENSITIVO						
	LIMIT SWITCH	BALLUFF	BNS519-FR60111-FD V024463	1	FC 660	59-12	
	FINECORSA						
	MICROSWITCH	HONEYWELL	3AC6 F010112	1	FC 7	3-12	
	MICROINTERRUTTORE						
	MICROSWITCH	HONEYWELL	3AC6 F010112	1	FC 8	3-15	
	MICROINTERRUTTORE						
	SWITCH 3PH INDICATOR	CEMA UK Ltd	114 FT03 V014617	1	FC 9	13-2	
	INTERRUTTORE INDICATORE TRIFASE						
	SIZE AND LOCATION GAUGE	MARPOSS	E39 807 Z127846	1	G 1	31-1	
	CALIBRO MISURA DI POSIZIONE						
	SIZE AND LOCATION GAUGE	MARPOSS	E39 807 Z127846	1	G 1	32-1	
	CALIBRO MISURA DI POSIZIONE						
	SIZING GAUGEHEAD	MARPOSS	AB72 3413478050 PART OF Z127846	1	GH 1	33-20	
	TESTA DI MISURA CALIBRO						
	SIZING GAUGEHEAD	MARPOSS	AB72 3413478050 PART OF Z127846	1	GH 2	33-20	
	TESTA DI MISURA CALIBRO						
	LOCATION GAUGEHEAD	MARPOSS	A110 3413246101 PART OF Z127846	1	GH 3	33-21	
	TESTA POSIZIONATORE						
	CIRCUIT BREAKER	KLOCKNER MOELLER	NZM9-250/ZM9.200+A V029925	1	IA 1	3-3	
	INTERRUTTORE TERMICO						
	CIRCUIT BREAKER	KLOCKNER MOELLER	NZMH4-40+H4U+NHi22 V025557	1	IA 10	8-2	
	INTERRUTTORE TERMICO						
	CIRCUIT BREAKER	KLOCKNER MOELLER	PKZM1-25+NHi11 V027385	1	IA 11	14-2	
	INTERRUTTORE TERMICO						
	CIRCUIT BREAKER	KLOCKNER MOELLER	FAZG2 V025085	1	IA 14	14-12	
	INTERRUTTORE TERMICO						

DRAWN						KE	KE	KE	KE	KE	KE	KE	KE	NAME	CHANGES
RDP						17-02-97	17-02-97	17-02-97	17-02-97	17-02-97	17-02-97	17-02-97	17-02-97	DATE	
CHECKED						W/O 96956	W/O 97833	W/O 92887	W/O 97662	W/O 97645	W/O 96907	W/O 96905	W/O 97032	C.I.	
APPROVED															
LAYOUT APP'D															

TITLE

STOCK LIST.

LISTA DEL COMPONENTI

M/C No 318-89

FMA

EY01529

MICROFILM

REF.DRG —

SHEET 134

SHEETS 150

19 FEB 97 08.00

ITEM No.	DESCRIPTION *DESCRIZIONE*	MANUFACTURER *COSTRUTTORE*	CATALOGUE No. *No CATALOGO*	QTY *Q.TA*	DESIGNATION *DENOMINAZIONE*	LOCATION *POSIZIONE*	MACHINE LOCATION
	CIRCUT BREAKER 10A	KLOCKNER MOELLER	FAZG 10 V029807	1	IA 15	14-14	
	INTERRUTTORE TERMICO						
	CIRCUT BREAKER 10A	KLOCKNER MOELLER	FAZG 10 V029807	1	IA 16	14-17	
	INTERRUTTORE TERMICO						
	CIRCUT BREAKER 10A	KLOCKNER MOELLER	FAZG 10 V029807	1	IA 17	14-20	
	INTERRUTTORE TERMICO						
	CIRCUIT BREAKER	KLOCKNER MOELLER	PKZM1-6+2H+NH111+C V027386	1	IA 18	15-2	
	INTERRUTTORE TERMICO						
	CIRCUIT BREAKER	KLOCKNER MOELLER	FAZG 4 V025086	1	IA 19	15-12	
	INTERRUTTORE TERMICO						
	CIRCUIT BREAKER	KLOCKNER MOELLER	FAZG4-2+H111-FAZ V030587	1	IA 2	2-2	
	INTERRUTTORE TERMICO						
	CIRCUIT BREAKER	KLOCKNER MOELLER	PKZM1-10+2H+NH111+C V027383	1	IA 20	16-2	
	INTERRUTTORE TERMICO						
	CIRCUIT BREAKER 40A	KLOCKNER MOELLER	FAZG 40 V029808	1	IA 21	16-7	
	INTERRUTTORE TERMICO						
	CIRCUIT BREAKER	KLOCKNER MOELLER	FAZG2 V025085	1	IA 22	16-10	
	INTERRUTTORE TERMICO						
	CIRCUT BREAKER 10A	KLOCKNER MOELLER	FAZG 10 V029807	1	IA 23	16-13	
	INTERRUTTORE TERMICO						
	CIRCUIT BREAKER	KLOCKNER MOELLER	FAZG 4 V025086	1	IA 24	16-15	
	INTERRUTTORE TERMICO						
	CIRCUIT BREAKER	KLOCKNER MOELLER	FAZG-10+HI10 V030143	1	IA 25	16-17	
	INTERRUTTORE TERMICO						
	CIRCUT BREAKER 10A	KLOCKNER MOELLER	FAZG 10 V029807	1	IA 26	17-1	
	INTERRUTTORE TERMICO						
	CIRCUIT BREAKER	KLOCKNER MOELLER	FAZG-10+HI10 V030143	1	IA 27	17-3	
	INTERRUTTORE TERMICO						
	CIRCUT BREAKER 10A	KLOCKNER MOELLER	FAZG 10 V029807	1	IA 28	17-5	
	INTERRUTTORE TERMICO						
	CIRCUIT BREAKER	KLOCKNER MOELLER	PKZM1-4+NHILL V028939	1	IA 29	17-14	
	INTERRUTTORE TERMICO						
	CIRCUIT BREAKER	KLOCKNER MOELLER	NZM6-100-ZM6-100+H6U V020417	1	IA 3	4-12	
	INTERRUTTORE TERMICO						
	CIRCUIT BREAKER	KLOCKNER MOELLER	FAZG 4 V025086	1	IA 30	17-18	
	INTERRUTTORE TERMICO						
	CIRCUIT BREAKER	KLOCKNER MOELLER	FAZG 4 V025086	1	IA 31	17-21	
	INTERRUTTORE TERMICO						
	CIRCUIT BREAKER	KLOCKNER MOELLER	PKZM1-10+2H+NH111+C V027383	1	IA 32	18-2	
	INTERRUTTORE TERMICO						
	CIRCUIT BREAKER	KLOCKNER MOELLER	FAZG 4 V025086	1	IA 33	18-9	
	INTERRUTTORE TERMICO						
	CIRCUT BREAKER 10A	KLOCKNER MOELLER	FAZG 10 V029807	1	IA 34	18-12	
	INTERRUTTORE TERMICO						
	CIRCUIT BREAKER	KLOCKNER MOELLER	FAZG-4+HI10 V030141	1	IA 35	19-13	
	INTERRUTTORE TERMICO						
	CIRCUIT BREAKER	KLOCKNER MOELLER	FAZG-4+HI10 V030141	1	IA 36	19-17	
	INTERRUTTORE TERMICO						
	CIRCUIT BREAKER	KLOCKNER MOELLER	FAZG 4 V025086	1	IA 37	23-6	
	INTERRUTTORE TERMICO						
	CIRCUIT BREAKER 1A	KLOCKNER MOELLER	FAZG 1 V025084	1	IA 38	23-11	
	INTERRUTTORE TERMICO						
	CIRCUIT BREAKER 1A	KLOCKNER MOELLER	FAZG 1 V025084	1	IA 39	23-16	
	INTERRUTTORE TERMICO						
	CIRCUIT BREAKER	KLOCKNER MOELLER	PKZM1-0.4+2h-NH111-C V021197	1	IA 4	4-20	
	INTERRUTTORE TERMICO						
	CIRCUIT BREAKER 1A	KLOCKNER MOELLER	FAZG 1 V025084	1	IA 40	34-16	
	INTERRUTTORE TERMICO						
	CIRCUIT BREAKER 1A	KLOCKNER MOELLER	FAZG 1 V025084	1	IA 41	34-19	
	INTERRUTTORE TERMICO						
	CIRCUIT BREAKER	KLOCKNER MOELLER	PKZM1-16+NH111 V028358	1	IA 5	6-2	
	INTERRUTTORE TERMICO						
	CIRCUIT BREAKER	KLOCKNER MOELLER	PKZM1-0.4+2h-NH111-C V021197	1	IA 6	6-12	
	INTERRUTTORE TERMICO						
	CIRCIUT BREAKER/	KLOCKNER MOELLER	PKZM1-2.4+NHILL V028938	1	IA 7	7-2	
	INTERRUTTORE TERMICO						

DRAWN RDP					KE	KE	KE	KE	KE	KE	KE	KE	NAME	CHANGES	TITLE
CHECKED					17-02-97	17-02-97	17-02-97	17-02-97	17-02-97	17-02-97	17-02-97	17-02-97	DATE		STOCK LIST. *LISTA DEL COMPONENTI*
APPROVED					M/O 99898	M/O 97633	M/O 97287	M/O 97562	M/O 97645	M/O 99607	M/O 99950	M/O 97032	C. I.		
LAYOUT APP'D															M/C No 318-89

FMA

EY01529

MICROFILM

REF.DRG -

SHEET 135

SHEETS 150

19 FEB 97 08.00

ITEM No.	DESCRIPTION *DESCRIZIONE*	MANUFACTURER *COSTRUTTORE*	CATALOGUE No. *No CATALOGO*	QTY *Q.TA*	DESIGNATION *DENOMINAZIONE*	LOCATION *POSIZIONE*	MACHINE LOCATION
	CIRCUIT BREAKER	KLOCKNER MOELLER	PKZM1-1+2H+NH111+C V027384	1	IA 8	7-8	
	SUPPORTO MODULI I/O						
	I/O MODULE STATION	LANDIS LUND	- W127100	1	IO 1	41-2	
	SUPPORTO MODULI I/O						
	I/O MODULE STATION	LANDIS LUND	- W127100	1	IO 10	59-2	
	SUPPORTO MODULI I/O						
	I/O MODULE STATION	LANDIS LUND	- W127100	1	IO 11	61-2	
	SUPPORTO MODULI I/O						
	I/O MODULE STATION	LANDIS LUND	- W127100	1	IO 12	63-2	
	SUPPORTO MODULI I/O						
	I/O MODULE STATION	LANDIS LUND	- W127100	1	IO 2	43-2	
	SUPPORTO MODULI I/O						
	I/O MODULE STATION	LANDIS LUND	- W127100	1	IO 3	45-2	
	SUPPORTO MODULI I/O						
	I/O MODULE STATION	LANDIS LUND	- W127100	1	IO 4	47-2	
	SUPPORTO MODULI I/O						
	I/O MODULE STATION	LANDIS LUND	- W127100	1	IO 5	49-2	
	SUPPORTO MODULI I/O						
	INPUT MODULE 24V DC	POTTER & BRUMFIELD	IDCM-5 V906144	1	IO 512	41-2	
	24VDC MODULO INGRESSO						
	INPUT MODULE 24V DC	POTTER & BRUMFIELD	IDCM-5 V906144	1	IO 513	41-4	
	24VDC MODULO INGRESSO						
	INPUT MODULE 24V DC	POTTER & BRUMFIELD	IDCM-5 V906144	1	IO 514	41-6	
	24VDC MODULO INGRESSO						
	INPUT MODULE 24V DC	POTTER & BRUMFIELD	IDCM-5 V906144	1	IO 515	41-8	
	24VDC MODULO INGRESSO						
	INPUT MODULE 24V DC	POTTER & BRUMFIELD	IDCM-5 V906144	1	IO 516	41-10	
	24VDC MODULO INGRESSO						
	INPUT MODULE 24V DC	POTTER & BRUMFIELD	IDCM-5 V906144	1	IO 517	41-12	
	24VDC MODULO INGRESSO						
	INPUT MODULE 24V DC	POTTER & BRUMFIELD	IDCM-5 V906144	1	IO 518	41-14	
	24VDC MODULO INGRESSO						
	INPUT MODULE 24V DC	POTTER & BRUMFIELD	IDCM-5 V906144	1	IO 519	41-16	
	24VDC MODULO INGRESSO						
	INPUT MODULE 24V DC	POTTER & BRUMFIELD	IDCM-5 V906144	1	IO 520	42-2	
	24VDC MODULO INGRESSO						
	INPUT MODULE 24V DC	POTTER & BRUMFIELD	IDCM-5 V906144	1	IO 521	42-4	
	24VDC MODULO INGRESSO						
	INPUT MODULE 24V DC	POTTER & BRUMFIELD	IDCM-5 V906144	1	IO 522	42-6	
	24VDC MODULO INGRESSO						
	INPUT MODULE 24V DC	POTTER & BRUMFIELD	IDCM-5 V906144	1	IO 523	42-8	
	24VDC MODULO INGRESSO						
	INPUT MODULE 24V DC	POTTER & BRUMFIELD	IDCM-5 V906144	1	IO 524	42-10	
	24VDC MODULO INGRESSO						
	INPUT MODULE 24V DC	POTTER & BRUMFIELD	IDCM-5 V906144	1	IO 525	42-12	
	24VDC MODULO INGRESSO						
	INPUT MODULE 24V DC	POTTER & BRUMFIELD	IDCM-5 V906144	1	IO 526	42-14	
	24VDC MODULO INGRESSO						
	INPUT MODULE 24V DC	POTTER & BRUMFIELD	IDCM-5 V906144	1	IO 527	42-16	
	24VDC MODULO INGRESSO						
	INPUT MODULE 24V DC	POTTER & BRUMFIELD	IDCM-5 V906144	1	IO 528	43-2	
	24VDC MODULO INGRESSO						
	INPUT MODULE 24V DC	POTTER & BRUMFIELD	IDCM-5 V906144	1	IO 529	43-4	
	24VDC MODULO INGRESSO						
	INPUT MODULE 24V DC	POTTER & BRUMFIELD	IDCM-5 V906144	1	IO 530	43-6	
	24VDC MODULO INGRESSO						
	INPUT MODULE 24V DC	POTTER & BRUMFIELD	IDCM-5 V906144	1	IO 531	43-8	
	24VDC MODULO INGRESSO						
	INPUT MODULE 24V DC	POTTER & BRUMFIELD	IDCM-5 V906144	1	IO 532	43-10	
	24VDC MODULO INGRESSO						
	INPUT MODULE 24V DC	POTTER & BRUMFIELD	IDCM-5 V906144	1	IO 533	43-12	
	24VDC MODULO INGRESSO						
	INPUT MODULE 24V DC	POTTER & BRUMFIELD	IDCM-5 V906144	1	IO 534	43-14	
	24VDC MODULO INGRESSO						
	INPUT MODULE 24V DC	POTTER & BRUMFIELD	IDCM-5 V906144	1	IO 535	43-16	
	24VDC MODULO INGRESSO						

	NAME	DATE	C.I.
DRAWN RDP	KE	17-02-97	M/O 58628
CHECKED	KE	17-02-97	M/O 63813
APPROVED	KE	17-02-97	M/O 07287
LAYOUT APP'D	KE	17-02-97	M/O 47662
	KE	17-02-97	M/O 97645
	KE	17-02-97	M/O 96607
	KE	17-02-97	M/O 96950
	KE	17-02-97	M/O 67032

CHANGES

TITLE

STOCK LIST.

LISTA DEL COMPONENTI

M/C No 318-89

FMA

EY01529

MICROFILM

REF.DRG -

SHEET 136

SHEETS 150

19 FEB 97 08.00

ITEM No.	DESCRIPTION *DESCRIZIONE*	MANUFACTURER *COSTRUTTORE*	CATALOGUE No. *No CATALOGO*		QTY *Q.TA*	DESIGNATION *DENOMINAZIONE*		LOCATION *POSIZIONE*	MACHINE LOCATION
	INPUT MODULE 24V DC *24VDC MODULO INGRESSO*	POTTER & BRUMFIELD	IDCM-5	V906144	1	IO	536	44-2	
	INPUT MODULE 24V DC *24VDC MODULO INGRESSO*	POTTER & BRUMFIELD	IDCM-5	V906144	1	IO	537	44-4	
	INPUT MODULE 24V DC *24VDC MODULO INGRESSO*	POTTER & BRUMFIELD	IDCM-5	V906144	1	IO	538	44-6	
	INPUT MODULE 24V DC *24VDC MODULO INGRESSO*	POTTER & BRUMFIELD	IDCM-5	V906144	1	IO	539	44-8	
	INPUT MODULE 24V DC *24VDC MODULO INGRESSO*	POTTER & BRUMFIELD	IDCM-5	V906144	1	IO	540	44-10	
	INPUT MODULE 24V DC *24VDC MODULO INGRESSO*	POTTER & BRUMFIELD	IDCM-5	V906144	1	IO	541	44-12	
	INPUT MODULE 24V DC *24VDC MODULO INGRESSO*	POTTER & BRUMFIELD	IDCM-5	V906144	1	IO	542	44-14	
	INPUT MODULE 24V DC *24VDC MODULO INGRESSO*	POTTER & BRUMFIELD	IDCM-5	V906144	1	IO	543	44-16	
	INPUT MODULE 24V DC *24VDC MODULO INGRESSO*	POTTER & BRUMFIELD	IDCM-5	V906144	1	IO	544	45-2	
	INPUT MODULE 24V DC *24VDC MODULO INGRESSO*	POTTER & BRUMFIELD	IDCM-5	V906144	1	IO	545	45-4	
	INPUT MODULE 24V DC *24VDC MODULO INGRESSO*	POTTER & BRUMFIELD	IDCM-5	V906144	1	IO	546	45-6	
	INPUT MODULE 24V DC *24VDC MODULO INGRESSO*	POTTER & BRUMFIELD	IDCM-5	V906144	1	IO	547	45-8	
	INPUT MODULE 24V DC *24VDC MODULO INGRESSO*	POTTER & BRUMFIELD	IDCM-5	V906144	1	IO	548	45-10	
	INPUT MODULE 24V DC *24VDC MODULO INGRESSO*	POTTER & BRUMFIELD	IDCM-5	V906144	1	IO	549	45-12	
	INPUT MODULE 24V DC *24VDC MODULO INGRESSO*	POTTER & BRUMFIELD	IDCM-5	V906144	1	IO	550	45-14	
	INPUT MODULE 24V DC *24VDC MODULO INGRESSO*	POTTER & BRUMFIELD	IDCM-5	V906144	1	IO	551	45-16	
	INPUT MODULE 24V DC *24VDC MODULO INGRESSO*	POTTER & BRUMFIELD	IDCM-5	V906144	1	IO	552	46-2	
	INPUT MODULE 24V DC *24VDC MODULO INGRESSO*	POTTER & BRUMFIELD	IDCM-5	V906144	1	IO	553	46-4	
	INPUT MODULE 24V DC *24VDC MODULO INGRESSO*	POTTER & BRUMFIELD	IDCM-5	V906144	1	IO	554	46-6	
	INPUT MODULE 24V DC *24VDC MODULO INGRESSO*	POTTER & BRUMFIELD	IDCM-5	V906144	1	IO	555	46-8	
	INPUT MODULE 24V DC *24VDC MODULO INGRESSO*	POTTER & BRUMFIELD	IDCM-5	V906144	1	IO	556	46-10	
	INPUT MODULE 24V DC *24VDC MODULO INGRESSO*	POTTER & BRUMFIELD	IDCM-5	V906144	1	IO	557	46-12	
	INPUT MODULE 24V DC *24VDC MODULO INGRESSO*	POTTER & BRUMFIELD	IDCM-5	V906144	1	IO	558	46-14	
	INPUT MODULE 24V DC *24VDC MODULO INGRESSO*	POTTER & BRUMFIELD	IDCM-5	V906144	1	IO	559	46-16	
	INPUT MODULE 24V DC *24VDC MODULO INGRESSO*	POTTER & BRUMFIELD	IDCM-5	V906144	1	IO	560	47-2	
	INPUT MODULE 24V DC *24VDC MODULO INGRESSO*	POTTER & BRUMFIELD	IDCM-5	V906144	1	IO	561	47-4	
	INPUT MODULE 24V DC *24VDC MODULO INGRESSO*	POTTER & BRUMFIELD	IDCM-5	V906144	1	IO	562	47-6	
	INPUT MODULE 24V DC *24VDC MODULO INGRESSO*	POTTER & BRUMFIELD	IDCM-5	V906144	1	IO	563	47-8	
	INPUT MODULE 24V DC *24VDC MODULO INGRESSO*	POTTER & BRUMFIELD	IDCM-5	V906144	1	IO	564	47-10	
	INPUT MODULE 24V DC *24VDC MODULO INGRESSO*	POTTER & BRUMFIELD	IDCM-5	V906144	1	IO	565	47-12	
	INPUT MODULE 24V DC *24VDC MODULO INGRESSO*	POTTER & BRUMFIELD	IDCM-5	V906144	1	IO	566	47-14	
	INPUT MODULE 24V DC *24VDC MODULO INGRESSO*	POTTER & BRUMFIELD	IDCM-5	V906144	1	IO	567	47-16	
	INPUT MODULE 24V DC *24VDC MODULO INGRESSO*	POTTER & BRUMFIELD	IDCM-5	V906144	1	IO	568	48-2	

CHANGES								
NAME	KE	KE	KE	KE	KE	KE	KE	KE
DATE	17-02-97	17-02-97	17-02-97	17-02-97	17-02-97	17-02-97	17-02-97	17-02-97
C.I.	W/O 95858	W/O 97833	W/O 97287	W/O 97652	W/O 97645	W/O 96607	W/O 96550	W/O 97032

DRAWN: RDP
CHECKED:
APPROVED:
LAYOUT APP'D:

TITLE
STOCK LIST.
LISTA DEL COMPONENTI

M/C No 318-89

FMA

EY01529

MICROFILM:
REF.DRG: –
SHEET 137
SHEETS 150

19 FEB 97 08.00

ITEM No.	DESCRIPTION *DESCRIZIONE*	MANUFACTURER *COSTRUTTORE*	CATALOGUE No. *No CATALOGO*	QTY *Q.TA*	DESIGNATION *DENOMINAZIONE*	LOCATION *POSIZIONE*	MACHINE LOCATION
	INPUT MODULE 24V DC	POTTER & BRUMFIELD	IDCM-5 V906144	1	IO 569	48-4	
	24VDC MODULO INGRESSO						
	INPUT MODULE 24V DC	POTTER & BRUMFIELD	IDCM-5 V906144	1	IO 570	48-6	
	24VDC MODULO INGRESSO						
	INPUT MODULE 24V DC	POTTER & BRUMFIELD	IDCM-5 V906144	1	IO 571	48-8	
	24VDC MODULO INGRESSO						
	INPUT MODULE 24V DC	POTTER & BRUMFIELD	IDCM-5 V906144	1	IO 572	48-10	
	24VDC MODULO INGRESSO						
	INPUT MODULE 24V DC	POTTER & BRUMFIELD	IDCM-5 V906144	1	IO 573	48-12	
	24VDC MODULO INGRESSO						
	INPUT MODULE 24V DC	POTTER & BRUMFIELD	IDCM-5 V906144	1	IO 574	48-14	
	24VDC MODULO INGRESSO						
	INPUT MODULE 24V DC	POTTER & BRUMFIELD	IDCM-5 V906144	1	IO 575	48-16	
	24VDC MODULO INGRESSO						
	INPUT MODULE 24V DC	POTTER & BRUMFIELD	IDCM-5 V906144	1	IO 576	49-2	
	24VDC MODULO INGRESSO						
	INPUT MODULE 24V DC	POTTER & BRUMFIELD	IDCM-5 V906144	1	IO 577	49-4	
	24VDC MODULO INGRESSO						
	INPUT MODULE 24V DC	POTTER & BRUMFIELD	IDCM-5 V906144	1	IO 578	49-6	
	24VDC MODULO INGRESSO						
	INPUT MODULE 24V DC	POTTER & BRUMFIELD	IDCM-5 V906144	1	IO 579	49-8	
	24VDC MODULO INGRESSO						
	INPUT MODULE 24V DC	POTTER & BRUMFIELD	IDCM-5 V906144	1	IO 580	49-10	
	24VDC MODULO INGRESSO						
	INPUT MODULE 24V DC	POTTER & BRUMFIELD	IDCM-5 V906144	1	IO 581	49-12	
	24VDC MODULO INGRESSO						
	INPUT MODULE 24V DC	POTTER & BRUMFIELD	IDCM-5 V906144	1	IO 582	49-14	
	24VDC MODULO INGRESSO						
	INPUT MODULE 24V DC	POTTER & BRUMFIELD	IDCM-5 V906144	1	IO 583	49-16	
	24VDC MODULO INGRESSO						
	INPUT MODULE 24V DC	POTTER & BRUMFIELD	IDCM-5 V906144	1	IO 584	50-2	
	24VDC MODULO INGRESSO						
	INPUT MODULE 24V DC	POTTER & BRUMFIELD	IDCM-5 V906144	1	IO 585	50-4	
	24VDC MODULO INGRESSO						
	INPUT MODULE 24V DC	POTTER & BRUMFIELD	IDCM-5 V906144	1	IO 586	50-6	
	24VDC MODULO INGRESSO						
	INPUT MODULE 24V DC	POTTER & BRUMFIELD	IDCM-5 V906144	1	IO 587	50-8	
	24VDC MODULO INGRESSO						
	INPUT MODULE 24V DC	POTTER & BRUMFIELD	IDCM-5 V906144	1	IO 588	50-10	
	24VDC MODULO INGRESSO						
	INPUT MODULE 24V DC	POTTER & BRUMFIELD	IDCM-5 V906144	1	IO 589	50-12	
	24VDC MODULO INGRESSO						
	INPUT MODULE 24V DC	POTTER & BRUMFIELD	IDCM-5 V906144	1	IO 590	50-14	
	24VDC MODULO INGRESSO						
	INPUT MODULE 24V DC	POTTER & BRUMFIELD	IDCM-5 V906144	1	IO 591	50-16	
	24VDC MODULO INGRESSO						
	INPUT MODULE 24V DC	POTTER & BRUMFIELD	IDCM-5 V906144	1	IO 592	51-2	
	24VDC MODULO INGRESSO						
	INPUT MODULE 24V DC	POTTER & BRUMFIELD	IDCM-5 V906144	1	IO 593	51-4	
	24VDC MODULO INGRESSO						
	INPUT MODULE 24V DC	POTTER & BRUMFIELD	IDCM-5 V906144	1	IO 594	51-6	
	24VDC MODULO INGRESSO						
	INPUT MODULE 24V DC	POTTER & BRUMFIELD	IDCM-5 V906144	1	IO 595	51-8	
	24VDC MODULO INGRESSO						
	INPUT MODULE 24V DC	POTTER & BRUMFIELD	IDCM-5 V906144	1	IO 596	51-10	
	24VDC MODULO INGRESSO						
	INPUT MODULE 24V DC	POTTER & BRUMFIELD	IDCM-5 V906144	1	IO 597	51-12	
	24VDC MODULO INGRESSO						
	INPUT MODULE 24V DC	POTTER & BRUMFIELD	IDCM-5 V906144	1	IO 598	51-14	
	24VDC MODULO INGRESSO						
	INPUT MODULE 24V DC	POTTER & BRUMFIELD	IDCM-5 V906144	1	IO 599	51-16	
	24VDC MODULO INGRESSO						
	I/O MODULE STATION	LANDIS LUND	- W127100	1	IO 6	51-2	
	SUPPORTO MODULO I/O						
	INPUT MODULE 24V DC	POTTER & BRUMFIELD	IDCM-5 V906144	1	IO 600	52-2	
	24VDC MODULO INGRESSO						

DRAWN RDP						KE	KE	KE	KE	KE	KE	KE	NAME
CHECKED						17-02-97	17-02-97	17-02-97	17-02-97	17-02-97	17-02-97	17-02-97	DATE
APPROVED						W/O 96936	W/O 97032	W/O 96950	W/O 96907	W/O 97045	W/O 96962	W/O 96984	C.I.
LAYOUT APP'D													

CHANGES

TITLE

STOCK LIST.

LISTA DEL COMPONENTI

M/C No 318-89

FMA

EY01529

MICROFILM

REF. DRG -

SHEET 138

SHEETS 150

19 FEB 97 08.00

ITEM No.	DESCRIPTION *DESCRIZIONE*	MANUFACTURER *COSTRUTTORE*	CATALOGUE No. *No CATALOGO*	QTY *Q.TA*	DESIGNATION *DENOMINAZIONE*	LOCATION *POSIZIONE*	MACHINE LOCATION
	INPUT MODULE 24V DC	POTTER & BRUMFIELD	IDCM-5 V906144	1	IO 601	52-4	
	24VDC MODULO INGRESSO						
	INPUT MODULE 24V DC	POTTER & BRUMFIELD	IDCM-5 V906144	1	IO 602	52-6	
	24VDC MODULO INGRESSO						
	INPUT MODULE 24V DC	POTTER & BRUMFIELD	IDCM-5 V906144	1	IO 603	52-8	
	24VDC MODULO INGRESSO						
	INPUT MODULE 24V DC	POTTER & BRUMFIELD	IDCM-5 V906144	1	IO 604	52-10	
	24VDC MODULO INGRESSO						
	INPUT MODULE 24V DC	POTTER & BRUMFIELD	IDCM-5 V906144	1	IO 605	52-12	
	24VDC MODULO INGRESSO						
	INPUT MODULE 24V DC	POTTER & BRUMFIELD	IDCM-5 V906144	1	IO 606	52-14	
	24VDC MODULO INGRESSO						
	INPUT MODULE 24V DC	POTTER & BRUMFIELD	IDCM-5 V906144	1	IO 607	52-16	
	24VDC MODULO INGRESSO						
	INPUT MODULE 24V DC	POTTER & BRUMFIELD	IDCM-5 V906144	1	IO 608	53-2	
	24VDC MODULO INGRESSO						
	INPUT MODULE 24V DC	POTTER & BRUMFIELD	IDCM-5 V906144	1	IO 609	53-4	
	24VDC MODULO INGRESSO						
	INPUT MODULE 24V DC	POTTER & BRUMFIELD	IDCM-5 V906144	1	IO 610	53-6	
	24VDC MODULO INGRESSO						
	INPUT MODULE 24V DC	POTTER & BRUMFIELD	IDCM-5 V906144	1	IO 611	53-8	
	24VDC MODULO INGRESSO						
	INPUT MODULE 24V DC	POTTER & BRUMFIELD	IDCM-5 V906144	1	IO 612	53-10	
	24VDC MODULO INGRESSO						
	INPUT MODULE 24V DC	POTTER & BRUMFIELD	IDCM-5 V906144	1	IO 613	53-12	
	24VDC MODULO INGRESSO						
	INPUT MODULE 24V DC	POTTER & BRUMFIELD	IDCM-5 V906144	1	IO 614	53-14	
	24VDC MODULO INGRESSO						
	INPUT MODULE 24V DC	POTTER & BRUMFIELD	IDCM-5 V906144	1	IO 615	53-16	
	24VDC MODULO INGRESSO						
	INPUT MODULE 24V DC	POTTER & BRUMFIELD	IDCM-5 V906144	1	IO 616	54-2	
	24VDC MODULO INGRESSO						
	INPUT MODULE 24V DC	POTTER & BRUMFIELD	IDCM-5 V906144	1	IO 617	54-4	
	24VDC MODULO INGRESSO						
	INPUT MODULE 24V DC	POTTER & BRUMFIELD	IDCM-5 V906144	1	IO 618	54-6	
	24VDC MODULO INGRESSO						
	INPUT MODULE 24V DC	POTTER & BRUMFIELD	IDCM-5 V906144	1	IO 619	54-8	
	24VDC MODULO INGRESSO						
	INPUT MODULE 24V DC	POTTER & BRUMFIELD	IDCM-5 V906144	1	IO 620	54-10	
	24VDC MODULO INGRESSO						
	INPUT MODULE 24V DC	POTTER & BRUMFIELD	IDCM-5 V906144	1	IO 621	54-12	
	24VDC MODULO INGRESSO						
	INPUT MODULE 24V DC	POTTER & BRUMFIELD	IDCM-5 V906144	1	IO 622	54-14	
	24VDC MODULO INGRESSO						
	INPUT MODULE 24V DC	POTTER & BRUMFIELD	IDCM-5 V906144	1	IO 623	54-16	
	24VDC MODULO INGRESSO						
	INPUT MODULE 24V DC	POTTER & BRUMFIELD	IDCM-5 V906144	1	IO 624	55-2	
	24VDC MODULO INGRESSO						
	INPUT MODULE 24V DC	POTTER & BRUMFIELD	IDCM-5 V906144	1	IO 625	55-4	
	24VDC MODULO INGRESSO						
	INPUT MODULE 24V DC	POTTER & BRUMFIELD	IDCM-5 V906144	1	IO 626	55-6	
	24VDC MODULO INGRESSO						
	INPUT MODULE 24V DC	POTTER & BRUMFIELD	IDCM-5 V906144	1	IO 627	55-8	
	24VDC MODULO INGRESSO						
	INPUT MODULE 24V DC	POTTER & BRUMFIELD	IDCM-5 V906144	1	IO 628	55-10	
	24VDC MODULO INGRESSO						
	INPUT MODULE 24V DC	POTTER & BRUMFIELD	IDCM-5 V906144	1	IO 629	55-12	
	24VDC MODULO INGRESSO						
	INPUT MODULE 24V DC	POTTER & BRUMFIELD	IDCM-5 V906144	1	IO 630	55-14	
	24VDC MODULO INGRESSO						
	INPUT MODULE 24V DC	POTTER & BRUMFIELD	IDCM-5 V906144	1	IO 631	55-16	
	24VDC MODULO INGRESSO						
	INPUT MODULE 24V DC	POTTER & BRUMFIELD	IDCM-5 V906144	1	IO 632	56-2	
	24VDC MODULO INGRESSO						
	INPUT MODULE 24V DC	POTTER & BRUMFIELD	IDCM-5 V906144	1	IO 633	56-4	
	24VDC MODULO INGRESSO						

DRAWN RDP						XE	XE	XE	XE	XE	XE	XE	XE	NAME
CHECKED						17-02-97	17-02-97	17-02-97	17-02-97	17-02-97	17-02-97	17-02-97	17-02-97	DATE
APPROVED						M/O 96898	M/O 96793	M/O 96782	M/O 96707	M/O 96645	M/O 96607	M/O 96590	M/O 96312	C.I.
LAYOUT APP'D														

CHANGES

TITLE

STOCK LIST.

LISTA DEL COMPONENTI

M/C No 318-89

FMA

EY01529

MICROFILM

REF.DRG –

SHEET 139

SHEETS 150

19 FEB 97 08.00

ITEM No.	DESCRIPTION *DESCRIZIONE*	MANUFACTURER *COSTRUTTORE*	CATALOGUE No. *No CATALOGO*	QTY *Q.TA*	DESIGNATION *DENOMINAZIONE*	LOCATION *POSIZIONE*	MACHINE LOCATION
	INPUT MODULE 24V DC	POTTER & BRUMFIELD	IDCM-5 V906144	1	IO 634	56-6	
	24VDC MODULO INGRESSO						
	INPUT MODULE 24V DC	POTTER & BRUMFIELD	IDCM-5 V906144	1	IO 635	56-8	
	24VDC MODULO INGRESSO						
	INPUT MODULE 24V DC	POTTER & BRUMFIELD	IDCM-5 V906144	1	IO 636	56-10	
	24VDC MODULO INGRESSO						
	INPUT MODULE 24V DC	POTTER & BRUMFIELD	IDCM-5 V906144	1	IO 637	56-12	
	24VDC MODULO INGRESSO						
	INPUT MODULE 24V DC	POTTER & BRUMFIELD	IDCM-5 V906144	1	IO 638	56-14	
	24VDC MODULO INGRESSO						
	INPUT MODULE 24V DC	POTTER & BRUMFIELD	IDCM-5 V906144	1	IO 639	56-16	
	24VDC MODULO INGRESSO						
	INPUT MODULE 24V DC	POTTER & BRUMFIELD	IDCM-5 V906144	1	IO 640	57-2	
	24VDC MODULO INGRESSO						
	INPUT MODULE 24V DC	POTTER & BRUMFIELD	IDCM-5 V906144	1	IO 641	57-4	
	24VDC MODULO INGRESSO						
	INPUT MODULE 24V DC	POTTER & BRUMFIELD	IDCM-5 V906144	1	IO 642	57-6	
	24VDC MODULO INGRESSO						
	INPUT MODULE 24V DC	POTTER & BRUMFIELD	IDCM-5 V906144	1	IO 643	57-8	
	24VDC MODULO INGRESSO						
	INPUT MODULE 24V DC	POTTER & BRUMFIELD	IDCM-5 V906144	1	IO 644	57-10	
	24VDC MODULO INGRESSO						
	INPUT MODULE 24V DC	POTTER & BRUMFIELD	IDCM-5 V906144	1	IO 645	57-12	
	24VDC MODULO INGRESSO						
	INPUT MODULE 24V DC	POTTER & BRUMFIELD	IDCM-5 V906144	1	IO 646	57-14	
	24VDC MODULO INGRESSO						
	INPUT MODULE 24V DC	POTTER & BRUMFIELD	IDCM-5 V906144	1	IO 647	57-16	
	24VDC MODULO INGRESSO						
	INPUT MODULE 24V DC	POTTER & BRUMFIELD	IDCM-5 V906144	1	IO 648	58-2	
	24VDC MODULO INGRESSO						
	INPUT MODULE 24V DC	POTTER & BRUMFIELD	IDCM-5 V906144	1	IO 649	58-4	
	24VDC MODULO INGRESSO						
	INPUT MODULE 24V DC	POTTER & BRUMFIELD	IDCM-5 V906144	1	IO 650	58-6	
	24VDC MODULO INGRESSO						
	INPUT MODULE 24V DC	POTTER & BRUMFIELD	IDCM-5 V906144	1	IO 651	58-8	
	24VDC MODULO INGRESSO						
	INPUT MODULE 24V DC	POTTER & BRUMFIELD	IDCM-5 V906144	1	IO 652	58-10	
	24VDC MODULO INGRESSO						
	INPUT MODULE 24V DC	POTTER & BRUMFIELD	IDCM-5 V906144	1	IO 653	58-12	
	24VDC MODULO INGRESSO						
	INPUT MODULE 24V DC	POTTER & BRUMFIELD	IDCM-5 V906144	1	IO 654	58-14	
	24VDC MODULO INGRESSO						
	INPUT MODULE 24V DC	POTTER & BRUMFIELD	IDCM-5 V906144	1	IO 655	58-16	
	24VDC MODULO INGRESSO						
	INPUT MODULE 24V DC	POTTER & BRUMFIELD	IDCM-5 V906144	1	IO 656	59-2	
	24VDC MODULO INGRESSO						
	INPUT MODULE 24V DC	POTTER & BRUMFIELD	IDCM-5 V906144	1	IO 657	59-4	
	24VDC MODULO INGRESSO						
	INPUT MODULE 24V DC	POTTER & BRUMFIELD	IDCM-5 V906144	1	IO 658	59-6	
	24VDC MODULO INGRESSO						
	INPUT MODULE 24V DC	POTTER & BRUMFIELD	IDCM-5 V906144	1	IO 659	59-8	
	24VDC MODULO INGRESSO						
	INPUT MODULE 24V DC	POTTER & BRUMFIELD	IDCM-5 V906144	1	IO 660	59-10	
	24VDC MODULO INGRESSO						
	INPUT MODULE 24V DC	POTTER & BRUMFIELD	IDCM-5 V906144	1	IO 661	59-12	
	24VDC MODULO INGRESSO						
	INPUT MODULE 24V DC	POTTER & BRUMFIELD	IDCM-5 V906144	1	IO 662	59-14	
	24VDC MODULO INGRESSO						
	INPUT MODULE 24V DC	POTTER & BRUMFIELD	IDCM-5 V906144	1	IO 663	59-16	
	24VDC MODULO INGRESSO						
	INPUT MODULE 24V DC	POTTER & BRUMFIELD	IDCM-5 V906144	1	IO 664	60-2	
	24VDC MODULO INGRESSO						
	INPUT MODULE 24V DC	POTTER & BRUMFIELD	IDCM-5 V906144	1	IO 665	60-4	
	24VDC MODULO INGRESSO						
	INPUT MODULE 24V DC	POTTER & BRUMFIELD	IDCM-5 V906144	1	IO 666	60-6	
	24VDC MODULO INGRESSO						

DRAWN RDP					KE	KE	KE	KE	KE	KE	KE	KE	NAME	CHANGES	TITLE	MICROFILM
CHECKED					17-02-97	17-02-97	17-02-97	17-02-97	17-02-97	17-02-97	17-02-97	17-02-97	DATE		STOCK LIST. *LISTA DEL COMPONENTI*	REF.DRG —
APPROVED					M/O 96895	M/O 97633	M/O 97287	M/O 97642	M/O 97645	M/O 96607	M/O 96950	M/O 97032	C.I.			SHEET 140
LAYOUT APP'D															M/C No 318-89	SHEETS 150

FMA

EY01529

ITEM No.	DESCRIPTION *DESCRIZIONE*	MANUFACTURER *COSTRUTTORE*	CATALOGUE No. *No CATALOGO*	QTY *Q.TA*	DESIGNATION *DENOMINAZIONE*	LOCATION *POSIZIONE*	MACHINE LOCATION
	INPUT MODULE 24V DC	POTTER & BRUMFIELD	IDCM-5 V906144	1	IO 667	60-8	
	24VDC MODULO INGRESSO						
	INPUT MODULE 24V DC	POTTER & BRUMFIELD	IDCM-5 V906144	1	IO 668	60-10	
	24VDC MODULO INGRESSO						
	INPUT MODULE 24V DC	POTTER & BRUMFIELD	IDCM-5 V906144	1	IO 669	60-12	
	24VDC MODULO INGRESSO						
	INPUT MODULE 24V DC	POTTER & BRUMFIELD	IDCM-5 V906144	1	IO 670	60-14	
	24VDC MODULO INGRESSO						
	INPUT MODULE 24V DC	POTTER & BRUMFIELD	IDCM-5 V906144	1	IO 671	60-16	
	24VDC MODULO INGRESSO						
	INPUT MODULE 24V DC	POTTER & BRUMFIELD	IDCM-5 V906144	1	IO 672	61-2	
	24VDC MODULO INGRESSO						
	INPUT MODULE 24V DC	POTTER & BRUMFIELD	IDCM-5 V906144	1	IO 673	61-4	
	24VDC MODULO INGRESSO						
	INPUT MODULE 24V DC	POTTER & BRUMFIELD	IDCM-5 V906144	1	IO 674	61-6	
	24VDC MODULO INGRESSO						
	INPUT MODULE 24V DC	POTTER & BRUMFIELD	IDCM-5 V906144	1	IO 675	61-8	
	24VDC MODULO INGRESSO						
	INPUT MODULE 24V DC	POTTER & BRUMFIELD	IDCM-5 V906144	1	IO 676	61-10	
	24VDC MODULO INGRESSO						
	INPUT MODULE 24V DC	POTTER & BRUMFIELD	IDCM-5 V906144	1	IO 677	61-12	
	24VDC MODULO INGRESSO						
	INPUT MODULE 24V DC	POTTER & BRUMFIELD	IDCM-5 V906144	1	IO 678	61-14	
	24VDC MODULO INGRESSO						
	INPUT MODULE 24V DC	POTTER & BRUMFIELD	IDCM-5 V906144	1	IO 679	61-16	
	24VDC MODULO INGRESSO						
	INPUT MODULE 24V DC	POTTER & BRUMFIELD	IDCM-5 V906144	1	IO 680	62-2	
	24VDC MODULO INGRESSO						
	INPUT MODULE 24V DC	POTTER & BRUMFIELD	IDCM-5 V906144	1	IO 681	62-4	
	24VDC MODULO INGRESSO						
	INPUT MODULE 24V DC	POTTER & BRUMFIELD	IDCM-5 V906144	1	IO 682	62-6	
	24VDC MODULO INGRESSO						
	INPUT MODULE 24V DC	POTTER & BRUMFIELD	IDCM-5 V906144	1	IO 683	62-8	
	24VDC MODULO INGRESSO						
	INPUT MODULE 24V DC	POTTER & BRUMFIELD	IDCM-5 V906144	1	IO 684	62-10	
	24VDC MODULO INGRESSO						
	INPUT MODULE 24V DC	POTTER & BRUMFIELD	IDCM-5 V906144	1	IO 685	62-12	
	24VDC MODULO INGRESSO						
	INPUT MODULE 24V DC	POTTER & BRUMFIELD	IDCM-5 V906144	1	IO 686	62-14	
	24VDC MODULO INGRESSO						
	INPUT MODULE 24V DC	POTTER & BRUMFIELD	IDCM-5 V906144	1	IO 687	62-16	
	24VDC MODULO INGRESSO						
	INPUT MODULE 24V DC	POTTER & BRUMFIELD	IDCM-5 V906144	1	IO 688	63-2	
	24VDC MODULO INGRESSO						
	INPUT MODULE 24V DC	POTTER & BRUMFIELD	IDCM-5 V906144	1	IO 689	63-4	
	24VDC MODULO INGRESSO						
	INPUT MODULE 24V DC	POTTER & BRUMFIELD	IDCM-5 V906144	1	IO 690	63-6	
	24VDC MODULO INGRESSO						
	INPUT MODULE 24V DC	POTTER & BRUMFIELD	IDCM-5 V906144	1	IO 691	63-8	
	24VDC MODULO INGRESSO						
	INPUT MODULE 24V DC	POTTER & BRUMFIELD	IDCM-5 V906144	1	IO 692	63-10	
	24VDC MODULO INGRESSO						
	INPUT MODULE 24V DC	POTTER & BRUMFIELD	IDCM-5 V906144	1	IO 693	63-12	
	24VDC MODULO INGRESSO						
	INPUT MODULE 24V DC	POTTER & BRUMFIELD	IDCM-5 V906144	1	IO 694	63-14	
	24VDC MODULO INGRESSO						
	INPUT MODULE 24V DC	POTTER & BRUMFIELD	IDCM-5 V906144	1	IO 695	63-16	
	24VDC MODULO INGRESSO						
	INPUT MODULE 24V DC	POTTER & BRUMFIELD	IDCM-5 V906144	1	IO 695	64-2	
	24VDC MODULO INGRESSO						
	INPUT MODULE 24V DC	POTTER & BRUMFIELD	IDCM-5 V906144	1	IO 697	64-4	
	24VDC MODULO INGRESSO						
	INPUT MODULE 24V DC	POTTER & BRUMFIELD	IDCM-5 V906144	1	IO 698	64-6	
	24VDC MODULO INGRESSO						
	INPUT MODULE 24V DC	POTTER & BRUMFIELD	IDCM-5 V906144	1	IO 699	64-8	
	24VDC MODULO INGRESSO						

CHANGES			
NAME	DATE	C.I.	
KE	17-02-97	W/O 97032	
KE	17-02-97	W/O 95950	
KE	17-02-97	W/O 95607	
KE	17-02-97	W/O 97645	
KE	17-02-97	W/O 97662	
KE	17-02-97	W/O 97287	
KE	17-02-97	W/O 97833	
KE	17-02-97	W/O 95858	

DRAWN: RDP
CHECKED:
APPROVED:
LAYOUT APP'D:

TITLE: STOCK LIST.
LISTA DEL COMPONENTI

M/C No 318-89

FMA

EY01529

MICROFILM:
REF.DRG: –
SHEET 141
SHEETS 150

19 FEB 97 08.00

ITEM No.	DESCRIPTION *DESCRIZIONE*	MANUFACTURER *COSTRUTTORE*	CATALOGUE No. *No CATALOGO*	QTY *Q.TA*	DESIGNATION *DENOMINAZIONE*	LOCATION *POSIZIONE*	MACHINE LOCATION
	I/O MODULE STATION	LANDIS LUND	- W127100	1	IO 7	53-2	
	SUPPORTO MODULO I/O						
	INPUT MODULE 24V DC	POTTER & BRUMFIELD	IDCM-5 V906144	1	IO 700	64-10	
	24VDC MODULO INGRESSO						
	INPUT MODULE 24V DC	POTTER & BRUMFIELD	IDCM-5 V906144	1	IO 701	64-12	
	24VDC MODULO INGRESSO						
	INPUT MODULE 24V DC	POTTER & BRUMFIELD	IDCM-5 V906144	1	IO 702	64-14	
	24VDC MODULO INGRESSO						
	INPUT MODULE 24V DC	POTTER & BRUMFIELD	IDCM-5 V906144	1	IO 703	64-16	
	24VDC MODULO INGRESSO						
	OUTPUT MODULE 24V DC	POTTER & BRUMFIELD	ODCM-5 V906145	1	IO 768	65-2	
	24VDC MODULO USCITA						
	OUTPUT MODULE 24V DC	POTTER & BRUMFIELD	ODCM-5 V906145	1	IO 769	65-4	
	24VDC MODULO USCITA						
	OUTPUT MODULE 24V DC	POTTER & BRUMFIELD	ODCM-5 V906145	1	IO 770	65-6	
	24VDC MODULO USCITA						
	OUTPUT MODULE 24V DC	POTTER & BRUMFIELD	ODCM-5 V906145	1	IO 771	65-8	
	24VDC MODULO USCITA						
	OUTPUT MODULE 24V DC	POTTER & BRUMFIELD	ODCM-5 V906145	1	IO 772	65-10	
	24VDC MODULO USCITA						
	OUTPUT MODULE 24V DC	POTTER & BRUMFIELD	ODCM-5 V906145	1	IO 773	65-12	
	24VDC MODULO USCITA						
	OUTPUT MODULE 24V DC	POTTER & BRUMFIELD	ODCM-5 V906145	1	IO 774	65-14	
	24VDC MODULO USCITA						
	OUTPUT MODULE 24V DC	POTTER & BRUMFIELD	ODCM-5 V906145	1	IO 775	65-16	
	24VDC MODULO USCITA						
	OUTPUT MODULE 24V DC	POTTER & BRUMFIELD	ODCM-5 V906145	1	IO 784	66-2	
	24VDC MODULO USCITA						
	OUTPUT MODULE 24V DC	POTTER & BRUMFIELD	ODCM-5 V906145	1	IO 785	66-4	
	24VDC MODULO USCITA						
	OUTPUT MODULE 24V DC	POTTER & BRUMFIELD	ODCM-5 V906145	1	IO 786	66-6	
	24VDC MODULO USCITA						
	OUTPUT MODULE 24V DC	POTTER & BRUMFIELD	ODCM-5 V906145	1	IO 787	66-8	
	24VDC MODULO USCITA						
	OUTPUT MODULE 24V DC	POTTER & BRUMFIELD	ODCM-5 V906145	1	IO 788	66-10	
	24VDC MODULO USCITA						
	OUTPUT MODULE 24V DC	POTTER & BRUMFIELD	ODCM-5 V906145	1	IO 789	66-12	
	24VDC MODULO USCITA						
	OUTPUT MODULE 24V DC	POTTER & BRUMFIELD	ODCM-5 V906145	1	IO 790	66-14	
	24VDC MODULO USCITA						
	OUTPUT MODULE 24V DC	POTTER & BRUMFIELD	ODCM-5 V906145	1	IO 791	66-16	
	24VDC MODULO USCITA						
	I/O MODULE STATION	LANDIS LUND	- W127100	1	IO 8	55-2	
	SUPPORTO MODULO I/O						
	OUTPUT MODULE 24V DC	POTTER & BRUMFIELD	ODCM-5 V906145	1	IO 800	67-2	
	24VDC MODULO USCITA						
	OUTPUT MODULE 24V DC	POTTER & BRUMFIELD	ODCM-5 V906145	1	IO 801	67-4	
	24VDC MODULO USCITA						
	OUTPUT MODULE 24V DC	POTTER & BRUMFIELD	ODCM-5 V906145	1	IO 802	67-6	
	24VDC MODULO USCITA						
	OUTPUT MODULE 24V DC	POTTER & BRUMFIELD	ODCM-5 V906145	1	IO 803	67-8	
	24VDC MODULO USCITA						
	OUTPUT MODULE 24V DC	POTTER & BRUMFIELD	ODCM-5 V906145	1	IO 804	67-10	
	24VDC MODULO USCITA						
	OUTPUT MODULE 24V DC	POTTER & BRUMFIELD	ODCM-5 V906145	1	IO 805	67-12	
	24VDC MODULO USCITA						
	OUTPUT MODULE 24V DC	POTTER & BRUMFIELD	ODCM-5 V906145	1	IO 806	67-14	
	24VDC MODULO USCITA						
	OUTPUT MODULE 24V DC	POTTER & BRUMFIELD	ODCM-5 V906145	1	IO 807	67-16	
	24VDC MODULO USCITA						
	OUTPUT MODULE 24V DC	POTTER & BRUMFIELD	ODCM-5 V906145	1	IO 816	68-2	
	24VDC MODULO USCITA						
	OUTPUT MODULE 24V DC	POTTER & BRUMFIELD	ODCM-5 V906145	1	IO 817	68-4	
	24VDC MODULO USCITA						
	OUTPUT MODULE 24V DC	POTTER & BRUMFIELD	ODCM-5 V906145	1	IO 818	68-6	
	24VDC MODULO USCITA						

	NAME	DATE	C.I.
DRAWN RDP	KE	17-02-97	M/O 95956
CHECKED	KE	17-02-97	M/O 97833
APPROVED	KE	17-02-97	M/O 97287
LAYOUT APP'D	KE	17-02-97	M/O 97662
CHANGES	KE	17-02-97	M/O 97645
	KE	17-02-97	M/O 96507
	KE	17-02-97	M/O 96960
	KE	17-02-97	M/O 97032

TITLE

STOCK LIST.

LISTA DEL COMPONENTI

M/C No 318-89

FMA

EY01529

MICROFILM

REF.DRG -

SHEET 142

SHEETS 150

19 FEB 97 08.00

ITEM No.	DESCRIPTION *DESCRIZIONE*	MANUFACTURER *COSTRUTTORE*	CATALOGUE No. *No CATALOGO*	QTY *Q.TA*	DESIGNATION *DENOMINAZIONE*	LOCATION *POSIZIONE*	MACHINE LOCATION
	OUTPUT MODULE 24V DC	POTTER & BRUMFIELD	ODCM-5 V906145	1	IO 819	68-8	
	24VDC MODULO USCITA						
	OUTPUT MODULE 24V DC	POTTER & BRUMFIELD	ODCM-5 V906145	1	IO 820	68-10	
	24VDC MODULO USCITA						
	OUTPUT MODULE 24V DC	POTTER & BRUMFIELD	ODCM-5 V906145	1	IO 821	68-12	
	24VDC MODULO USCITA						
	OUTPUT MODULE 24V DC	POTTER & BRUMFIELD	ODCM-5 V906145	1	IO 822	68-14	
	24VDC MODULO USCITA						
	OUTPUT MODULE 24V DC	POTTER & BRUMFIELD	ODCM-5 V906145	1	IO 823	68-16	
	24VDC MODULO USCITA						
	OUTPUT MODULE 24V DC	POTTER & BRUMFIELD	ODCM-5 V906145	1	IO 832	69-2	
	24VDC MODULO USCITA						
	OUTPUT MODULE 24V DC	POTTER & BRUMFIELD	ODCM-5 V906145	1	IO 833	69-4	
	24VDC MODULO USCITA						
	OUTPUT MODULE 24V DC	POTTER & BRUMFIELD	ODCM-5 V906145	1	IO 834	69-6	
	24VDC MODULO USCITA						
	OUTPUT MODULE 24V DC	POTTER & BRUMFIELD	ODCM-5 V906145	1	IO 835	69-8	
	24VDC MODULO USCITA						
	OUTPUT MODULE 24V DC	POTTER & BRUMFIELD	ODCM-5 V906145	1	IO 836	69-10	
	24VDC MODULO USCITA						
	OUTPUT MODULE 24V DC	POTTER & BRUMFIELD	ODCM-5 V906145	1	IO 837	69-12	
	24VDC MODULO USCITA						
	OUTPUT MODULE 24V DC	POTTER & BRUMFIELD	ODCM-5 V906145	1	IO 838	69-14	
	24VDC MODULO USCITA						
	OUTPUT MODULE 24V DC	POTTER & BRUMFIELD	ODCM-5 V906145	1	IO 839	69-16	
	24VDC MODULO USCITA						
	OUTPUT MODULE 24V DC	POTTER & BRUMFIELD	ODCM-5 V906145	1	IO 848	70-2	
	24VDC MODULO USCITA						
	OUTPUT MODULE 24V DC	POTTER & BRUMFIELD	ODCM-5 V906145	1	IO 849	70-4	
	24VDC MODULO USCITA						
	OUTPUT MODULE 24V DC	POTTER & BRUMFIELD	ODCM-5 V906145	1	IO 850	70-6	
	24VDC MODULO USCITA						
	OUTPUT MODULE 24V DC	POTTER & BRUMFIELD	ODCM-5 V906145	1	IO 851	70-8	
	24VDC MODULO USCITA						
	OUTPUT MODULE 24V DC	POTTER & BRUMFIELD	ODCM-5 V906145	1	IO 852	70-10	
	24VDC MODULO USCITA						
	OUTPUT MODULE 24V DC	POTTER & BRUMFIELD	ODCM-5 V906145	1	IO 853	70-12	
	24VDC MODULO USCITA						
	OUTPUT MODULE 24V DC	POTTER & BRUMFIELD	ODCM-5 V906145	1	IO 854	70-14	
	24VDC MODULO USCITA						
	OUTPUT MODULE 24V DC	POTTER & BRUMFIELD	ODCM-5 V906145	1	IO 855	70-16	
	24VDC MODULO USCITA						
	OUTPUT MODULE 24V DC	POTTER & BRUMFIELD	ODCM-5 V906145	1	IO 864	71-2	
	24VDC MODULO USCITA						
	OUTPUT MODULE 24V DC	POTTER & BRUMFIELD	ODCM-5 V906145	1	IO 865	71-4	
	24VDC MODULO USCITA						
	OUTPUT MODULE 24V DC	POTTER & BRUMFIELD	ODCM-5 V906145	1	IO 866	71-6	
	24VDC MODULO USCITA						
	OUTPUT MODULE 24V DC	POTTER & BRUMFIELD	ODCM-5 V906145	1	IO 867	71-8	
	24VDC MODULO USCITA						
	OUTPUT MODULE 24V DC	POTTER & BRUMFIELD	ODCM-5 V906145	1	IO 868	71-10	
	24VDC MODULO USCITA						
	OUTPUT MODULE 24V DC	POTTER & BRUMFIELD	ODCM-5 V906145	1	IO 869	71-12	
	24VDC MODULO USCITA						
	OUTPUT MODULE 24V DC	POTTER & BRUMFIELD	ODCM-5 V906145	1	IO 870	71-14	
	24VDC MODULO USCITA						
	OUTPUT MODULE 24V DC	POTTER & BRUMFIELD	ODCM-5 V906145	1	IO 871	71-16	
	24VDC MODULO USCITA						
	OUTPUT MODULE 24V DC	POTTER & BRUMFIELD	ODCM-5 V906145	1	IO 880	72-2	
	24VDC MODULO USCITA						
	OUTPUT MODULE 24V DC	POTTER & BRUMFIELD	ODCM-5 V906145	1	IO 881	72-4	
	24VDC MODULO USCITA						
	OUTPUT MODULE 24V DC	POTTER & BRUMFIELD	ODCM-5 V906145	1	IO 882	72-6	
	24VDC MODULO USCITA						
	OUTPUT MODULE 24V DC	POTTER & BRUMFIELD	ODCM-5 V906145	1	IO 883	72-8	
	24VDC MODULO USCITA						

DRAWN ROP							KE	KE	KE	KE	KE	KE	KE	KE	KE	NAME
CHECKED							17-02-97	17-02-97	17-02-97	17-02-97	17-02-97	17-02-97	17-02-97	17-02-97	17-02-97	DATE
APPROVED							W/O 95596	W/O 95596	W/O 97287	W/O 97562	W/O 97562	W/O 95596	W/O 95596	W/O 95596	W/O 97562	C I
LAYOUT APP'D																CHANGES

TITLE

STOCK LIST.

LISTA DEL COMPONENTI

M/C No 318-89

FMA

EY01529

MICROFILM

REF.DRG –

SHEET 143

SHEETS 150

19 FEB 97 08.00

ITEM No.	DESCRIPTION *DESCRIZIONE*	MANUFACTURER *COSTRUTTORE*	CATALOGUE No. *No CATALOGO*	QTY *Q.TA*	DESIGNATION *DENOMINAZIONE*	LOCATION *POSIZIONE*	MACHINE LOCATION
	OUTPUT MODULE 24V DC	POTTER & BRUMFIELD	ODCM-5 V906145	1	IO 884	72-10	
	24VDC MODULO USCITA						
	OUTPUT MODULE 24V DC	POTTER & BRUMFIELD	ODCM-5 V906145	1	IO 885	72-12	
	24VDC MODULO USCITA						
	OUTPUT MODULE 24V DC	POTTER & BRUMFIELD	ODCM-5 V906145	1	IO 886	72-14	
	24VDC MODULO USCITA						
	OUTPUT MODULE 24V DC	POTTER & BRUMFIELD	ODCM-5 V906145	1	IO 887	72-16	
	24VDC MODULO USCITA						
	OUTPUT MODULE 24V DC	POTTER & BRUMFIELD	ODCM-5 V906145	1	IO 896	73-2	
	24VDC MODULO USCITA						
	OUTPUT MODULE 24V DC	POTTER & BRUMFIELD	ODCM-5 V906145	1	IO 897	73-4	
	24VDC MODULO USCITA						
	OUTPUT MODULE 24V DC	POTTER & BRUMFIELD	ODCM-5 V906145	1	IO 898	73-6	
	24VDC MODULO USCITA						
	OUTPUT MODULE 24V DC	POTTER & BRUMFIELD	ODCM-5 V906145	1	IO 899	73-8	
	24VDC MODULO USCITA						
	I/O MODULE STATION	LANDIS LUND	- W127100	1	IO 9	57-2	
	SUPPORTO MODULO I/O						
	OUTPUT MODULE 24V DC	POTTER & BRUMFIELD	ODCM-5 V906145	1	IO 900	73-10	
	24VDC MODULO USCITA						
	OUTPUT MODULE 24V DC	POTTER & BRUMFIELD	ODCM-5 V906145	1	IO 901	73-12	
	24VDC MODULO USCITA						
	OUTPUT MODULE 24V DC	POTTER & BRUMFIELD	ODCM-5 V906145	1	IO 902	73-14	
	24VDC MODULO USCITA						
	OUTPUT MODULE 24V DC	POTTER & BRUMFIELD	ODCM-5 V906145	1	IO 903	73-16	
	24VDC MODULO USCITA						
	OUTPUT MODULE 24V DC	POTTER & BRUMFIELD	ODCM-5 V906145	1	IO 912	74-2	
	24VDC MODULO USCITA						
	OUTPUT MODULE 24V DC	POTTER & BRUMFIELD	ODCM-5 V906145	1	IO 913	74-4	
	24VDC MODULO USCITA						
	OUTPUT MODULE 24V DC	POTTER & BRUMFIELD	ODCM-5 V906145	1	IO 914	74-6	
	24VDC MODULO USCITA						
	OUTPUT MODULE 24V DC	POTTER & BRUMFIELD	ODCM-5 V906145	1	IO 915	74-8	
	24VDC MODULO USCITA						
	OUTPUT MODULE 24V DC	POTTER & BRUMFIELD	ODCM-5 V906145	1	IO 916	74-10	
	24VDC MODULO USCITA						
	OUTPUT MODULE 24V DC	POTTER & BRUMFIELD	ODCM-5 V906145	1	IO 917	74-12	
	24VDC MODULO USCITA						
	OUTPUT MODULE 24V DC	POTTER & BRUMFIELD	ODCM-5 V906145	1	IO 918	74-14	
	24VDC MODULO USCITA						
	OUTPUT MODULE 24V DC	POTTER & BRUMFIELD	ODCM-5 V906145	1	IO 919	74-16	
	24VDC MODULO USCITA						
	OUTPUT MODULE 24V DC	POTTER & BRUMFIELD	ODCM-5 V906145	1	IO 928	75-2	
	24VDC MODULO USCITA						
	OUTPUT MODULE 24V DC	POTTER & BRUMFIELD	ODCM-5 V906145	1	IO 929	75-4	
	24VDC MODULO USCITA						
	OUTPUT MODULE 24V DC	POTTER & BRUMFIELD	ODCM-5 V906145	1	IO 930	75-6	
	24VDC MODULO USCITA						
	OUTPUT MODULE 24V DC	POTTER & BRUMFIELD	ODCM-5 V906145	1	IO 931	75-8	
	24VDC MODULO USCITA						
	OUTPUT MODULE 24V DC	POTTER & BRUMFIELD	ODCM-5 V906145	1	IO 932	75-10	
	24VDC MODULO USCITA						
	OUTPUT MODULE 24V DC	POTTER & BRUMFIELD	ODCM-5 V906145	1	IO 933	75-12	
	24VDC MODULO USCITA						
	OUTPUT MODULE 24V DC	POTTER & BRUMFIELD	ODCM-5 V906145	1	IO 934	75-14	
	24VDC MODULO USCITA						
	OUTPUT MODULE 24V DC	POTTER & BRUMFIELD	ODCM-5 V906145	1	IO 935	75-16	
	24VDC MODULO USCITA						
	OUTPUT MODULE 24V DC	POTTER & BRUMFIELD	ODCM-5 V906145	1	IO 944	76-2	
	24VDC MODULO USCITA						
	OUTPUT MODULE 24V DC	POTTER & BRUMFIELD	ODCM-5 V906145	1	IO 945	76-4	
	24VDC MODULO USCITA						
	OUTPUT MODULE 24V DC	POTTER & BRUMFIELD	ODCM-5 V906145	1	IO 946	76-6	
	24VDC MODULO USCITA						
	OUTPUT MODULE 24V DC	POTTER & BRUMFIELD	ODCM-5 V906145	1	IO 947	76-8	
	24VDC MODULO USCITA						

DRAWN RDP					XE	XE	XE	XE	XE	XE	XE	XE	XE	NAME	CHANGES
CHECKED					17-02-97	17-02-97	17-02-97	17-02-97	17-02-97	17-02-97	17-02-97	17-02-97	17-02-97	DATE	
APPROVED					W/O 95958	W/O 95959	W/O 97287	W/O 97862	W/O 97545	W/O 96507	W/O 96990	W/O 97032		C.I.	
LAYOUT APP'D															

TITLE

STOCK LIST.

LISTA DEL COMPONENTI

M/C No 318-89

FMA

EY01529

MICROFILM

REF. DRG -

SHEET 144

SHEETS 150

19 FEB 97 08.00

ITEM No.	DESCRIPTION *DESCRIZIONE*	MANUFACTURER *COSTRUTTORE*	CATALOGUE No. *No CATALOGO*		QTY *Q.TA*	DESIGNATION *DENOMINAZIONE*		LOCATION *POSIZIONE*	MACHINE LOCATION
	OUTPUT MODULE 24V DC *24VDC MODULO USCITA*	POTTER & BRUMFIELD	ODCM-5	V906145	1	IO	948	76-10	
	OUTPUT MODULE 24V DC *24VDC MODULO USCITA*	POTTER & BRUMFIELD	ODCM-5	V906145	1	IO	949	76-12	
	OUTPUT MODULE 24V DC *24VDC MODULO USCITA*	POTTER & BRUMFIELD	ODCM-5	V906145	1	IO	950	76-14	
	OUTPUT MODULE 24V DC *24VDC MODULO USCITA*	POTTER & BRUMFIELD	ODCM-5	V906145	1	IO	951	76-16	
	LOAD CONTROL *CONTROLLO CARICO*	Wm. DON Ltd.	AACU Mk. 4	V027631	1	LCR	1	30-0	
	FLUORESCENT LAMP *LAMPADA FLUORESCENTE*	THORN EMI	ASD450 4300K 220V	V025914	1	LS	1	2-9	
	FLUORESCENT LAMP *LAMPADA FLUORESCENTE*	THORN EMI	ASD450 4300K 220V	V025914	1	LS	2	2-13	
	FLUORESCENT LAMP *LAMPADA FLUORESCENTE*	THORN EMI	ASD450 4300K 220V	V025914	1	LS	3	2-17	
	LAMPHOLDER+LAMP *LAMPADA*	SIEMENS	3sb13-00-2a+3sx1-344	V020747+V020739	1	LS	4	16-8	
	STATUS LAMP RED LENS *VETRINO LAMPADA DI STATO ROSSO*	TELEMECANIQUE	XVA-C34+BA15D 24V DC	V021121+V020968	1	LS	832	69-4	
	LENS UNIT ORG *UNITA DI VETRO ARANCIO*	TELEMECANIQUE	XVA-C45	V025438+V020968	1	LS	834	69-8	
	STATUS LAMP GREEN LENS *VETRINO LAMPADA DI STATO VERDE*	TELEMECANIQUE	XVA-C33+BA15D 24VDC	V020964+V020968	1	LS	835	69-10	
	AC MAIN SPINDLE MOTOR *MOTORE PRINCIPALE MANDRINO A.C.*	INDRAMAT	2AD160B-B35XX2AS01	V025868	1	M	1	4-3	
	SERVO MOTOR *SERVOMOTORE*	INDRAMAT	MAC63B-0-JS-4-X	V027508	1	M	10	9-19	
	SERVO MOTOR *SERVOMOTORE*	INDRAMAT	MAC63B-0-JS-4-X	V027508	1	M	11	10-5	
	SERVO MOTOR *SERVOMOTORE*	INDRAMAT	MAC63B-0-JS-4-X	V027508	1	M	12	10-12	
	SERVO MOTOR *SERVOMOTORE*	INDRAMAT	MAC63B-0-JS-4-X	V027508	1	M	13	10-19	
	SERVO MOTOR *SERVOMOTORE*	INDRAMAT	MAC09C-0-KD-3	V029734	1	M	14	11-9	
	SERVO MOTOR *SERVOMOTORE*	INDRAMAT	MAC63D-0FS3C/09581	V029729	1	M	15	11-16	
	SERVO MOTOR *SERVOMOTORE*	INDRAMAT	MAC63D-0-FS-4-C	V028443	1	M	16	12-5	
	MOTOR *MOTORE*	BROOK CROMPTON	UD132SH	V029916	1	M	2	6-2	
	LEVEL SWITCH *INTERRUTTORE LEVELLO*	VOGEL	WS32-2/230	PART OF V028061	1	M	3	6-12	
	MOTOR *MOTORE*	BROOK CROMPTON	0.75KW UD80BH	V029917	1	M	5	7-2	
	MOTOR *MOTORE*	BROOK CROMPTON	UD71FD (380V)	V029908	1	M	6	7-8	
	SERVO MOTOR *SERVOMOTORE*	INDRAMAT	MAC112C-0-ED-4-C	V027510	1	M	7	8-17	
	AC SERVO MOTOR *SERVOMOTORE A.C.*	INDRAMAT	MAC90A-0ZD4C/110A1	V025699	1	M	8	9-5	
	SERVO MOTOR *SERVOMOTORE*	INDRAMAT	MAC112A-0-VD-4-X	V027811	1	M	9	9-12	
	MAN MACHINE INTERFACE *INTERFACCIA UOMO MACCHINA*	LANDIS LUND	(AUTO DIM)	W124585	1	MMI	1	89-11	
	CONTACTOR *CONTATTORE*	SIEMENS	3TF44-17-0BB4	V029033	1	MT	1	16-10	
	CONTACTOR (22 AMP) *CONTATTORE*	SIEMENS	3TF43 22-0BB4	V029032	1	MT	3	24-12	
	CONTACTOR (22 AMP) *CONTATTORE*	SIEMENS	3TF43 22-0BB4	V029032	1	MT	3A	24-15	
	CONTACTOR (22 AMP) *CONTATTORE*	SIEMENS	3TF43 22-0BB4	V029032	1	MT	3B	24-19	
	CONTACTOR (22 AMP) *CONTATTORE*	SIEMENS	3TF43 22-0BB4	V029032	1	MT	3C	25-1	

CHANGES								
NAME	KE	KC	KE	KE	KE	KE	KE	KE
DATE	17-02-97	17-02-97	17-02-97	17-02-97	17-02-97	17-02-97	17-02-97	17-02-97
C.I.	W/O 97032	W/O 95950	W/O 96607	W/O 97645	W/O 97662	W/O 97297	W/O 97833	W/O 95688

DRAWN RDP

CHECKED

APPROVED

LAYOUT APP'D

TITLE

STOCK LIST.

LISTA DEL COMPONENTI

M/C No 318-89

FMA

EY01529

MICROFILM

REF.DRG —

SHEET 145

SHEETS 150

19 FEB 97 08.00

ITEM No.	DESCRIPTION *DESCRIZIONE*	MANUFACTURER *COSTRUTTORE*	CATALOGUE No. *No CATALOGO*		QTY *Q.TA*	DESIGNATION *DENOMINAZIONE*		LOCATION *POSIZIONE*	MACHINE LOCATION
	CONTACTOR (22 AMP)	SIEMENS	3TF43 22-0BB4	V029032	1	MT	3D	25-4	
	CONTATTORE								
	CONTACTOR (22 AMP)	SIEMENS	3TF43 22-0BB4	V029032	1	MT	3E	25-8	
	CONTATTORE								
	CONTACTOR	SIEMENS	3TF22 22-0BB4	V029030	1	MT	4	27-1	
	CONTATTORE								
	CONTACTOR	SIEMENS	3TF22 22-0BB4	V029030	1	MT	6	27-5	
	CONTATTORE								
	CONTACTOR	SIEMENS	3TF44-17-0BB4	V029033	1	MT	7	27-15	
	CONTATTORE								
	CONTACTOR (22 AMP)	SIEMENS	3TF43 22-0BB4	V029032	1	MT	771	65-10	
	CONTATTORE								
	CONTACTOR	SIEMENS	3TF22 22-0BB4	V029030	1	MT	785	66-6	
	CONTATTORE								
	CONTACTOR (REVERSER)	SIEMENS	3TD20-02-2BB4	V029943	1	MT	787	66-10	
	CONTATTORE								
	CONTACTOR (REVERSER)	SIEMENS	PART OF MT787	-	1	MT	788	66-12	
	CONTATTORE								
	CONTACTOR	SIEMENS	3TF44-17-0BB4	V029033	1	MT	8	27-21	
	CONTATTORE								
	OPTIMISING MODULE	INDRAMAT	AS 61/007-000	V029103	1	OPT	1	8-3	
	MODULO DI OTTIMIZZAZ.								
	OPTIMISING MODULE	INDRAMAT	MOD 13/1X009	V029736	1	OPT	10	11-18	
	MODULO DI OTTIMIZZAZ.								
	OPTIMISING MODULE	INDRAMAT	MOD 13/1X0009-388	V030253	1	OPT	11	12-7	
	MODULO DI OTTIMIZZAZ.								
	OPTIMISING MODULE	INDRAMAT	MOD1/1X028-050	V027800	1	OPT	2	8-19	
	MODULO DI OTTIMIZZAZ.								
	OPTIMISING MODULE	INDRAMAT	MOD 1/1X056	V027288	1	OPT	3	9-7	
	MODULO DI OTTIMIZZAZ.								
	OPTIMISING MODULE	INDRAMAT	MOD1/1X129-050	V027807	1	OPT	4	9-14	
	MODULO DI OTTIMIZZAZ.								
	OPTIMISING MODULE	INDRAMAT	MOD 13/1X007-353	V027806	1	OPT	5	9-21	
	MODULO DI OTTIMIZZAZ.								
	OPTIMISING MODULE	INDRAMAT	MOD 13/1X007-353	V027806	1	OPT	6	10-7	
	MODULO DI OTTIMIZZAZ.								
	OPTIMISING MODULE	INDRAMAT	MOD 13/1X007-353	V027806	1	OPT	7	10-14	
	MODULO DI OTTIMIZZAZ.								
	OPTIMISING MODULE	INDRAMAT	MOD 13/1X007-353	V027806	1	OPT	8	10-21	
	MODULO DI OTTIMIZZAZ.								
	OPTIMISING MODULE	INDRAMAT	MOD 1/1X0024-521	V029735	1	OPT	9	11-11	
	MODULO DI OTTIMIZZAZ.								
	SERVICE SOCKET	LEGRAND	573 71	V027698	1	PR	1	17-17	
	PRESE DI SERVIZIO								
	SERVICE SOCKET	LEGRAND	573 80	V027697	1	PR	2	17-20	
	PRESE DI SERVIZIO								
	PUSHBUTTON (RED)	SIEMENS	3SB10 00 0AC20+0A	V020719+V020743	1	PS	1	3-22	
	PULSANTE ROSSO								
	PUSH BUTTON	SIEMENS	3SB10-00-0AB20+20-0A	V020718+V020743	1	PS	2	19-21	
	PULSANTE								
	PUSHBUTTON (40mm RED)	SIEMENS	3SB10-00-1CC20	V029543+V020744	1	PS	3	24-9	
	PULSANTE ROSSO								
	PUSHBUTTON (40mm RED)	SIEMENS	3SB10-00-1CC20	V029543+V020744	1	PS	4	24-9	
	PULSANTE ROSSO								
	PUSHBUTTON (40mm RED)	SIEMENS	3SB10-00-1CC20	V029543+V020744	1	PS	5	24-9	
	PULSANTE ROSSO								
	PUSHBUTTON (GREEN)	SIEMENS	3SB10-00-0AE20+20-0A	V020721+V020743	1	PS	512	41-4	
	PULSANTE VERDE								
	PUSH BUTTON	SIEMENS	3SB10-00-0AE20+20-0D	V020721+V020744	1	PS	560	47-4	
	PULSANTE								
	PUSHBUTTON (RED)	SIEMENS	3BS10-00-0AC20+20-0D	V020719+V020744	1	PS	561	47-6	
	PULSANTE ROSSO								
	PUSH BUTTON	SIEMENS	3SB10-00-1DB20+20-0A	V020725+V020743	1	PS	562	47-8	
	PULSANTE								
	PUSH BUTTON	SIEMENS	3SB10-00-1DB20+20-0A	V020725+V020743	1	PS	563	47-10	
	PULSANTE								

DRAWN RDP								NAME	CHANGES
CHECKED					KE	KE	KE	KE	KE
APPROVED					17-02-97	17-02-97	17-02-97	17-02-97	17-02-97
LAYOUT APP'D					M/O 95896	M/O 97397	M/O 97397	M/O 97668	M/O 97645

KE	KE	KE	KE	KE	KE	KE	KE	NAME	CHANGES
17-02-97	17-02-97	17-02-97	17-02-97	17-02-97	17-02-97	17-02-97	17-02-97	DATE	
M/O 95896	M/O 97397	M/O 97397	M/O 97668	M/O 97645	M/O 95602	M/O 95950	M/O 97032	C.I.	

TITLE

STOCK LIST.

LISTA DEL COMPONENTI

M/C No 318-89

FMA

EY01529

MICROFILM

REF.DRG –

SHEET 146

SHEETS 150

19 FEB 97 08.00

ITEM No.	DESCRIPTION *DESCRIZIONE*	MANUFACTURER *COSTRUTTORE*	CATALOGUE No. *No CATALOGO*	QTY *Q.TA*	DESIGNATION *DENOMINAZIONE*	LOCATION *POSIZIONE*	MACHINE LOCATION
	PUSHBUTTON (RED)	SIEMENS	3SB10-00-0AC20+20-0A V020719+V020743	1	PS 564	47-12	
	PULSANTE ROSSO						
	PUSHBUTTON (GREEN)	SIEMENS	3SB10-00-0AE20+20-0A V020721+V020743	1	PS 568	48-4	
	PULSANTE VERDE						
	PUSH BUTTON	SIEMENS	3SB10-00-0AB20 V020718+V020744	1	PS 611	53-10	
	CONTATTORE						
	TIMER	KLOCKNER MOELLER	DILET 70-A V030385	1	R 1	22-17	
	TEMPORIZZATORE						
	TIMER	KLOCKNER MOELLER	DILET 70-A V030385	1	R 2	25-16	
	TEMPORIZZATORE						
	AC MAIN SPINDLE CONTROLLER	INDRAMAT	RAC3.1-150-460-A00W1 V029102	1	RAC 1	4--2	
	AZIONAM. MOLA A.C.						
	CONTROL RELAY (3-1)	SIEMENS	3TH20-31-0JB4 V029001	1	RELAY A	19-4	
	RELE' (3-1)						
	CONTROL RELAY (3-1)	SIEMENS	3TH20-31-0JB4 V029001	1	RELAY AA	65-16	
	RELE' (3-1)						
	CONTROL RELAY (3-1)	SIEMENS	3TH20-31-0JB4 V029001	1	RELAY AB	65-18	
	RELE' (3-1)						
	CONTROL RELAY (3-1)	SIEMENS	3TH20-31-0JB4 V029001	1	RELAY AC	73-4	
	RELE' (3-1)						
	CONTROL RELAY (3-1)	SIEMENS	3TH20-31-0JB4 V029001	1	RELAY AD	73-6	
	RELE' (3-1)						
	CONTROL RELAY (3-1)	SIEMENS	3TH20-31-0JB4 V029001	1	RELAY B	19-6	
	RELE' (3-1)						
	CONTROL RELAY (3-1)	SIEMENS	3TH20-31-0JB4 V029001	1	RELAY C	19-21	
	RELE' (3-1)						
	CONTROL RELAY (4-4)	SIEMENS	3TH22-44-0BB4 V029003	1	RELAY D	20-1	
	RELE' (4-4)						
	CONTROL RELAY (6-2)	SIEMENS	3TH22-62-0BB4 V029002	1	RELAY E	20-4	
	RELE' (6-2)						
	CONTROL RELAY (6-2)	SIEMENS	3TH22-62-0BB4 V029002	1	RELAY F	20-8	
	RELE' (6-2)						
	CONTROL RELAY (4-4)	SIEMENS	3TH22-44-0BB4 V029003	1	RELAY G	20-12	
	RELE' (4-4)						
	CONTROL RELAY (7-1)	SIEMENS	3TH22-71-0BB4 V031990	1	RELAY H	20-15	
	RELE' (7-1)						
	CONTROL RELAY (6-2)	SIEMENS	3TH22-62-0BB4 V029002	1	RELAY I	20-19	
	RELE' (6-2)						
	CONTROL RELAY (4-4)	SIEMENS	3TH22-44-0BB4 V029003	1	RELAY J	21-1	
	RELE' (4-4)						
	CONTROL RELAY (7-1)	SIEMENS	3TH22-71-0BB4 V031990	1	RELAY K	21-4	
	RELE' (7-1)						
	CONTROL RELAY (6-2)	SIEMENS	3TH22-62-0BB4 V029002	1	RELAY L	21-8	
	RELE' (6-2)						
	CONTROL RELAY (6-2)	SIEMENS	3TH22-62-0BB4 V029002	1	RELAY M	21-12	
	RELE' (6-2)						
	CONTROL RELAY (3-1)	SIEMENS	3TH20-31-0JB4 V029001	1	RELAY N	21-14	
	RELE' (3-1)						
	CONTROL RELAY (6-2)	SIEMENS	3TH22-62-0BB4 V029002	1	RELAY O	21-16	
	RELE' (6-2)						
	CONTROL RELAY (3-1)	SIEMENS	3TH20-31-0JB4 V029001	1	RELAY P	21-21	
	RELE' (3-1)						
	CONTROL RELAY (3-1)	SIEMENS	3TH20-31-0JB4 V029001	1	RELAY Q	22-1	
	RELE' (3-1)						
	CONTROL RELAY (3-1)	SIEMENS	3TH20-31-0JB4 V029001	1	RELAY R	22-4	
	RELE' (3-1)						
	CONTROL RELAY (3-1)	SIEMENS	3TH20-31-0JB4 V029001	1	RELAY S	22-8	
	RELE' (3-1)						
	CONTROL RELAY (3-1)	SIEMENS	3TH20-31-0JB4 V029001	1	RELAY T	22-11	
	RELE' (3-1)						
	CONTROL RELAY (3-1)	SIEMENS	3TH20-31-0JB4 V029001	1	RELAY U	23-1	
	RELE' (3-1)						
	CONTROL RELAY (3-1)	SIEMENS	3TH20-31-0JB4 V029001	1	RELAY V	23-21	
	RELE' (3-1)						
	CONTROL RELAY (3-1)	SIEMENS	3TH20-31-0JB4 V029001	1	RELAY W	28-12	
	RELE' (3-1)						

DRAWN RDP						KE	KE	KE	KE	KE	KE	KE	KE	NAME	CHANGES
CHECKED						17-02-97	17-02-97	17-02-97	17-02-97	17-02-97	17-02-97	17-02-97	17-02-97	DATE	
APPROVED						M/O 95958	M/O 97645	M/O 97287	M/O 97652	M/O 97645	M/O 95507	M/O 95950	M/O 97032	C.I.	
LAYOUT APP'D															

TITLE

STOCK LIST.

LISTA DEL COMPONENTI

M/C No 318-89

FMA

EY01529

MICROFILM

REF.DRG —

SHEET 147

SHEETS 150

19 FEB 97 08.00

ITEM No.	DESCRIPTION *DESCRIZIONE*	MANUFACTURER *COSTRUTTORE*	CATALOGUE No. *No CATALOGO*		QTY *Q.TA*	DESIGNATION *DENOMINAZIONE*		LOCATION *POSIZIONE*	MACHINE LOCATION
	CONTROL RELAY (3-1)	SIEMENS	3TH20-31-0JB4	V029001	1	RELAY	X	26-11	
	RELE' (3-1)								
	SPEED DETECTOR	SYNATEL	AMR4BTP	V030620	1	RS	1	34-2	
	MONITOR VELOCITA MOLA								
	ROTATION MODULE	THRICIS ELECRONICS	AMR 4	V019223	1	RS	2	35-3	
	MODULO DI ROTAZIONE								
	ROTATION MODULE	THRICIS ELECRONICS	AMR 4	V019223	1	RS	3	35-17	
	MODULO DI ROTAZIONE								
	R-C FILTER	PLASTICS TECH	C01-5220-STAR	V902084	1	RVCD	1	3-9	
	FILTRO R-C								
	R-C FILTER	PLASTICS TECH	C01-5220-STAR	V902084	1	RVCD	2	4-21	
	FILTRO R-C								
	R-C FILTER	PLASTICS TECH	C01-5220-STAR	V902084	1	RVCD	3	6-3	
	FILTRO R-C								
	R-C FILTER	PLASTICS TECH	C01-5220-STAR	V902084	1	RVCD	4	6-13	
	FILTRO R-C								
	R-C FILTER	PLASTICS TECH	C01-5220-STAR	V902084	1	RVCD	5	7-3	
	FILTRO R-C								
	R-C FILTER	PLASTICS TECH	C01-5220-STAR	V902084	1	RVCD	6	7-9	
	FILTRO R-C								
	FILTER UNIT	LANDIS LUND	-	X122978	1	RVCD	7	15-1	
	UNITA' FILTRO								
	DISTRIBUTION BLOCK	TAYLOR ELECTRIC	66043	V023207	1	SB	1	3-16	
	BLOCCO DISTRIBUTORE								
	SWITCH CONTROL	SIEMENS	3LF1 200-2AE47	V028996	1	SL	1	3-6	
	SELETTORE								
	KEY SWITCH+CONTACT BLOCK	SIEMENS	3SB10-00-4MA20	V026025+V020743	1	SL	2	3-12	
	SELETTORE A CHIAVE + BLOCCO CONTATTI								
	KEY SWITCH+CONTACT BLOCK	SIEMENS	3SB10-00-4MA20	V026025+V020743	1	SL	3	3-18	
	SELETTORE A CHIAVE + BLOCCO CONTATTI								
	KEY SWITCH	SIEMENS	3SB10-00-4LB01	V020729+V020743	1	SL	4	16-10	
	SELETTORE A CHIAVE								
	SELECTOR SWITCH	SIEMENS	3SB10-00-5LA20+20-0A	V023894+V020743	1	SL	565	47-14	
	SELETTORE								
	SELECTOR SWITCH	SIEMENS	3SB10-00-4LA20	V023296+V020743	1	SL	566	47-16	
	SELETTORE								
	KEY SWITCH	SIEMENS	3SB10-00-4LB01	V020729+V020743	1	SL	567	47-18	
	SELETTORE A CHIAVE								
	SELECTOR SWITCH	SIEMENS	3SB10002AB+3SB1320	V020727+V020743	1	SL	569	48-6	
	SELETTORE								
	SELECTOR SWITCH	SIEMENS	3SB10002AB+3SB1320	V020727+V020743	1	SL	576	49-4	
	SELETTORE								
	SERVO CONTROLLER	INDRAMAT	TDM 1.2 100-300W1	V024120	1	TDM	1	8-17	
	AZIONAMENTO SERVO								
	SERVO AMPLIFIER	INDRAMAT	TDM3.2-300-W0	V027007	1	TDM	10	12-9	
	AZIONAMENTO SERVO								
	SERVO CONTROLLER	INDRAMAT	TDM 1.2 30 300 W0	V024456	1	TDM	2	9-5	
	AZIONAMENTO SERVO								
	SERVO AMPLIFIER	INDRAMAT	TDM1.2 50 300 W1	V023032	1	TDM	3	9-12	
	AZIONAMENTO SERVO								
	SERVO AMPLIFIER	INDRAMAT	TDM3.2-300-W0	V027007	1	TDM	4	9-19	
	AZIONAMENTO SERVO								
	SERVO AMPLIFIER	INDRAMAT	TDM3.2-300-W0	V027007	1	TDM	5	10-5	
	AZIONAMENTO SERVO								
	SERVO AMPLIFIER	INDRAMAT	TDM3.2-300-W0	V027007	1	TDM	6	10-12	
	AZIONAMENTO SERVO								
	SERVO AMPLIFIER	INDRAMAT	TDM3.2-300-W0	V027007	1	TDM	7	10-19	
	AZIONAMENTO SERVO								
	SERVO AMPLIFIER	INDRAMAT	TDM1.2 50 300 W1	V023032	1	TDM	8	11-9	
	AZIONAMENTO SERVO								
	SERVO AMPLIFIER	INDRAMAT	TDM3.2-300-W0	V027007	1	TDM	9	11-16	
	AZIONAMENTO SERVO								
	TRANSFORMER 3PH 8KVA	INDRAMAT	DLT 8.0/S-380-220V	V024737	1	TR	3	8-1	
	TRASFORMATORE 3PH 8KVA								
	TRANSFORMER (3KVA)	AD MAGNETICS	VDE 0551/IEC 742	V029977	1	TR	4	14-3	
	TRASFORMATORE 3KVA								

DRAWN ADP						KE	KE	KE	KE	KE	KE	KE	KE	NAME	CHANGES	TITLE
CHECKED						17-02-97	17-02-97	17-02-97	17-02-97	17-02-97	17-02-97	17-02-97	17-02-97	DATE		STOCK LIST.
APPROVED						W/O 95258	W/O 97633	W/O 97287	W/O 97662	W/O 97645	W/O 95607	W/O 95950	W/O 97033	C.I.		*LISTA DEL COMPONENTI*
LAYOUT APP'D																M/C No 318-89

FMA

EY01529

MICROFILM

REF.DRG —

SHEET 148

SHEETS 150

ITEM No.	DESCRIPTION *DESCRIZIONE*	MANUFACTURER *COSTRUTTORE*	CATALOGUE No. *No CATALOGO*		QTY *Q.TA*	DESIGNATION *DENOMINAZIONE*		LOCATION *POSIZIONE*	MACHINE LOCATION
	CONSTANT VOLTAGE TRANSFORMER	LANDIS LUND	-	X117166	1	TA	5	15-7	
	TRASFORMATORE TENSIONE COSTANTE								
	POWER SUPPLY 24VDC 35A	MURRELEKTRONKIK	856157	V030912	1	TA	6	16-1	
	ALIMENTATORE 24VDC 35A								
	TRANSFORMER (630VA)	AD MAGNETICS	VDE 0551/IEC 742	V029975	1	TA	7	17-14	
	TRASFORMATORE 630VA								
	TRANSFORMER (1KVA)	AD MAGNETICS	VDE 0551/IEC 742	V029976	1	TA	8	18-3	
	TRASFORMATORE 1KVA								
	SERVO POWER SUPPLY	INDRAMAT	TVM2 1.50 220/300W1	V024121	1	TVM	1	8-10	
	ALIMENTATORE SERVO								
	SERVO POWER SUPPLY	INDRAMAT	TVM2 1.50 220/300W1	V024121	1	TVM	2	11-2	
	ALIMENTATORE SERVO								

229FEB997 08.05

DRAWN	RDP
CHECKED	
APPROVED	
LAYOUT APP'D	

NAME	DATE	C.I.
KE	17-02-97	W/O 97032
KE	17-02-97	W/O 95050
KE	17-02-97	W/O 96607
KE	17-02-97	W/O 97645
KE	17-02-97	W/O 97662
KE	17-02-97	W/O 97287
KE	17-02-97	W/O 97883
KE	17-02-97	W/O 95566

CHANGES

TITLE

STOCK LIST.

LISTA DEL COMPONENTI

M/C No 318-89

FMA

EY01529

MICROFILM

REF.DRG —

SHEET 149

SHEETS 150