Rockwell N-Series to MDM N-Series Replacement Conversion Table

Description	Rockwell N-Series P/N	MDM N-Series P/N	MDM Dwg	Speed-Torque Curve	MDM N-Series Motor Configuration File			
					UltraMaster (Ultra 100/200)	Download	UltraWare (Ultra 3000)	Download
Motor, 1000 Line Encoder	N-2302-1-F00AA	T0601T0104	33030-004	T0601T0	T0601T0NSeriesMaster(N2302).mtr	Download	T0601T0NSeriesWare(N2302).mxf	Download
Motor-24V Brake, 1000 Line Encoder	N-2302-1-F04AA	T0601T0105	Call Factory					
Motor, 1000 Line Encoder	N-2304-1-F00AA	T0601B8100	33030-004	T0601B8	T0601B8NSeriesMaster(N2304).mtr	Download	T0601B8NSeriesWare(N2304).mxf	Download
Motor-24V Brake, 1000 Line Encoder	N-2304-1-F04AA	T0601B8101	Call Factory					
Motor, 2000 Line Encoder	N-3406-2-H00AA	T0851A0109	31030-078	T0851A0	T0851A0NSeriesMaster(N3406).mtr	Download	T0851A0NSeriesWAre(N3406).mxf	Download
Motor-24V Brake, 2000 Line Encoder	N-3406-2-H04AA	T0851A0110	Call Factory					
Motor, 2000 Line Encoder	N-3412-2-H00AA	T0851C0103	31030-078	T0851C0	T0851C0NSeriesMaster(N3412).mtr	Download	T0851C0NSeriesWAre(N3412).mxf	Download
Motor-24V Brake, 2000 Line Encoder	N-3412-2-H04AA	T0851C0106	Call Factory					
Motor, 2000 Line Encoder	N-4214-2-H00AA	T1101D0102	32030-047	T1101D0	T1101D0NSeriesMaster(N4214).mtr	Download	T1101D0NSeriesWare(N4214).mxf	Download
Motor-24V Brake, 2000 Line Encoder	N-4214-2-H04AA	T1101D0103	Call Factory					
Motor, 2000 Line Encoder	N-4220-2-H00AA	T1101C6100	32030-047	T1101C6	T1101C6NSeriesMaster(N4220).mtr	Download	T1101C6NSeriesWare(N4220).mxf	Download
Motor-24V Brake, 2000 Line Encoder	N-4220-2-H04AA	T1101C6101	Call Factory					
Motor, 2000 Line Encoder	N-5630-2-H00AA	T1101D3100	32030-050	T1101D3	T1101D3NSeriesMaster(N5630).mtr	Download	T1101D3NSeriesWare(N5630).mxf	Download
Motor-24V Brake, 2000 Line Encoder	N-5630-2-H04AA	T1101D3101	Call Factory					
Motor, 2000 Line Encoder	N-5637-2-H00AA	T1102E0103	32030-052	T1102E0	T1102E0NSeriesMaster(N5637).mtr	Download	T1102E0NSeriesWare(N5637).mxf	Download
Motor-24V Brake, 2000 Line Encoder	N-5637-2-H04AA	T1102E0103	Call Factory					
Motor, 2000 Line Encoder	N-5647-2-H00AA	T1102G3100	32030-052	T1102G3	T1102G3NSeriesMaster(N5647).mtr	Download	T1102G3NSeriesWare(N5647).mxf	Download
Motor-24V Brake, 2000 Line Encoder	N-5647-2-H04AA	T1102G3101	Call Factory					

REVISIONS				
REV	ECN	DESCRIPTION	DATE	APP'D
A	DR8319	RELEASED	11/8/06	T.M.
B	ECN3230	WAS 33030-004-007, IS 33030-004,NOTES ADDED	07/03/07	J.S.

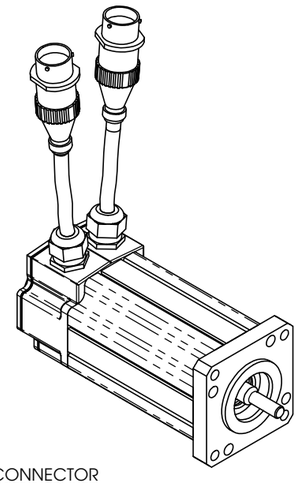

Clockwise rotation, viewed from the motor shaft, results in these waveforms.

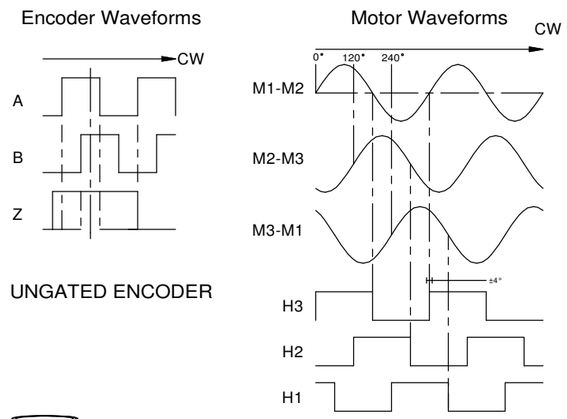

UNGATED ENCODER

ENCODER CONN WIRING CODE	
FROM	TO PIN
OUTPUT A	A
OUTPUT A'	B
OUTPUT B	C
OUTPUT B'	D
OUTPUT Z	E
OUTPUT Z'	F
CASE GROUND	G
N/C	H
+ 5 VDC	J
+ 5 VDC	K
COMMON	L
COMMON	M
N/C	N
N/C	P
THERM	R
THERM	S
OUTPUT W (H1)	T
OUTPUT U (H3)	U
OUTPUT V (H2)	V

MOTOR CONN. WIRING CODE	
FROM	TO PIN
MOTOR M1	A
MOTOR M2	B
MOTOR M3	C
CASE	D
N/C	E

NOTE:
TEMPERATURE SENSOR:
CONTACTS: NORMALLY CLOSED
MAX AMPS: 6 AMP
RATED VOLTAGE: 24VDC

B **USE MOTOR CONFIGURATION FILE FROM CMC PER MOTOR MODEL NUMBER**

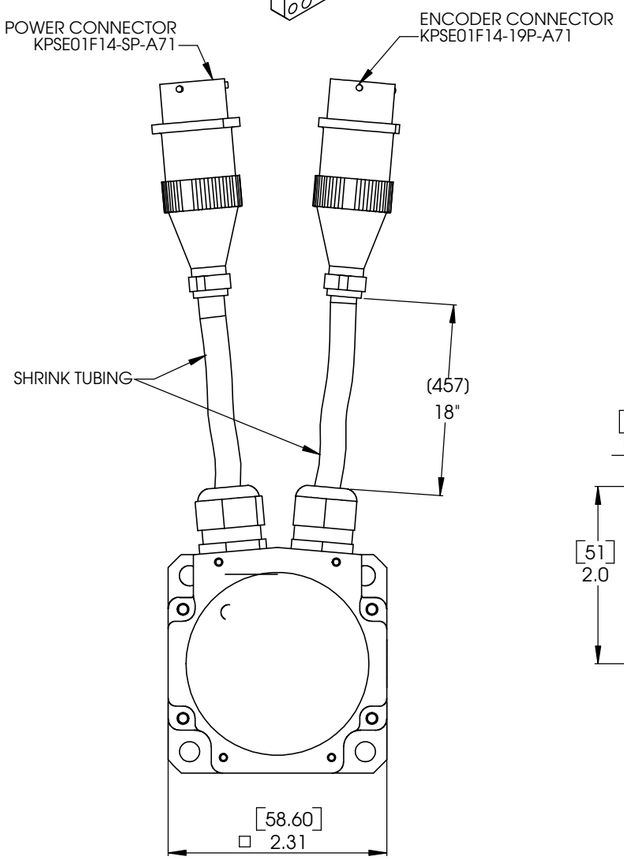

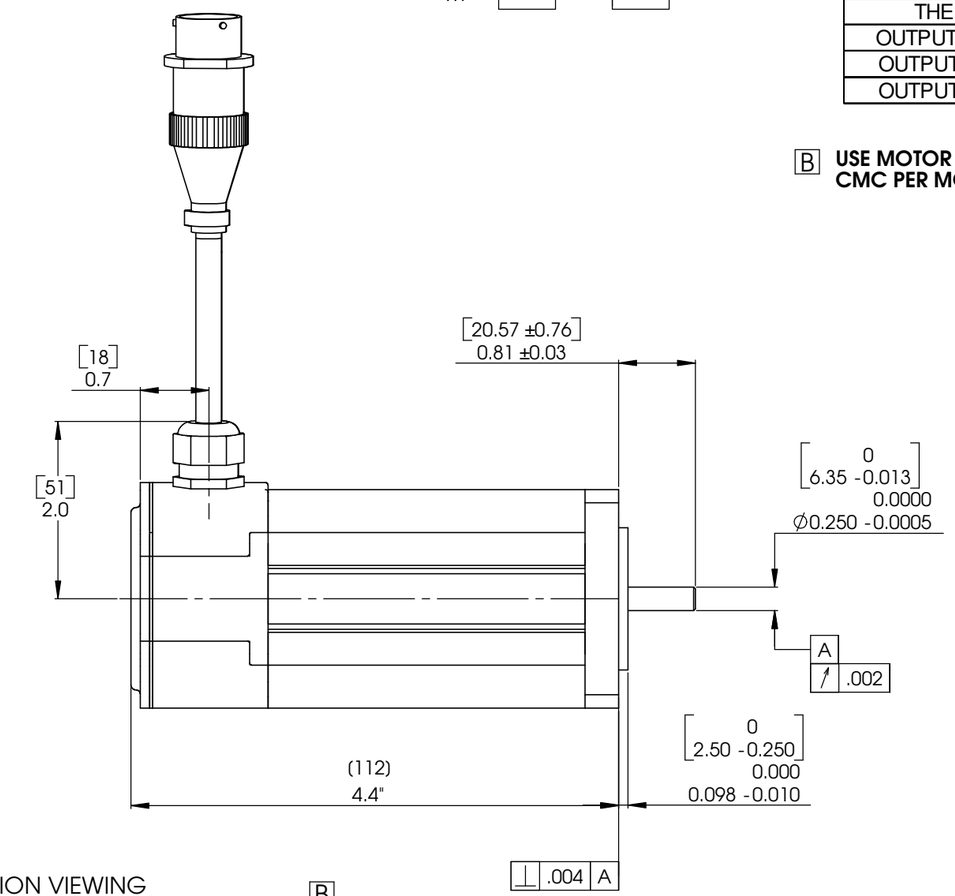

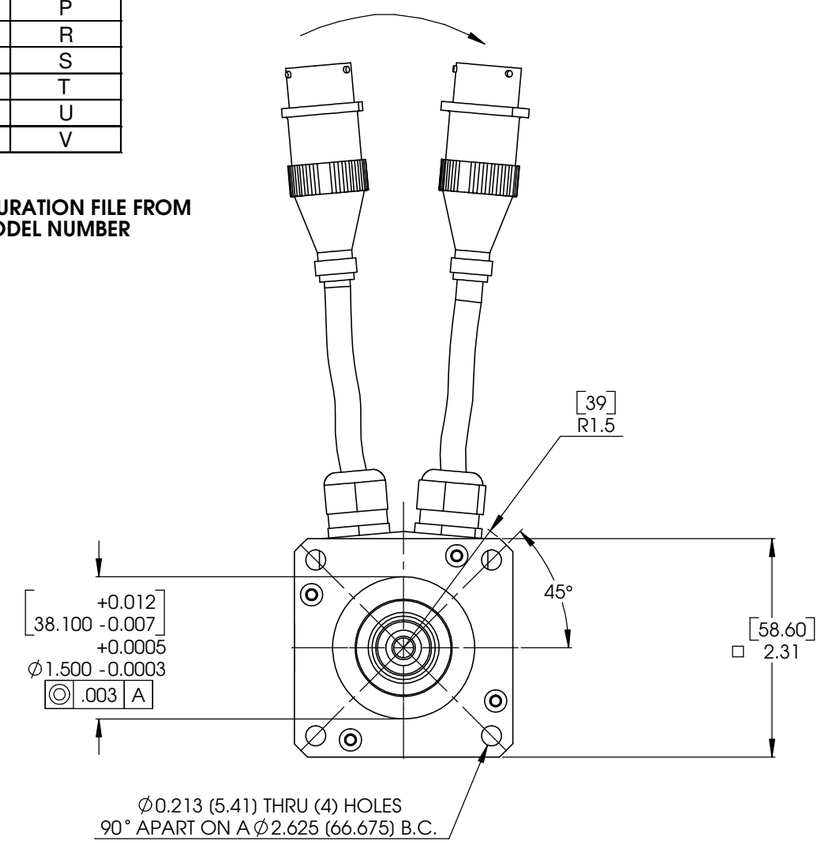

DIMENSIONS IN BRACKETS (DUAL) ARE IN MILLIMETERS

NOTES:

1. ROTATION: CLOCKWISE MOTOR ROTATION VIEWING DRIVE END OCCURS WHEN PHASE A LEADS PHASE B, PHASE B LEADS PHASE C.

B **FRAME: T0601 WITH NEMA 23 FLANGE**

CAD GENERATED DRAWING, DO NOT MANUALLY UPDATE

NOTICE
Information contained herein is the sole property of Cleveland Motion Controls, Torque Systems Division. This may not be reproduced, copied or traced in any manner in part or whole without the written permission by Cleveland Motion Controls, Torque Systems Division.

THIRD ANGLE PROJECTION

Dimensions in millimeters (mm) and apply after processing. Remove burrs & sharp edges. Finish: Clean and free per ASME Y14.5M-1994.

MILLIMETERS (mm) TOLERANCES (UNLESS OTHERWISE SPECIFIED	
X	+/- 2.5
XX	+/- 0.25
XXX	+/- 0.100
ANGLES	+/- 0°-30'
MATERIAL	N/A
FINISH	N/A

APPLICATION	
NEXT ASSY	USED ON
	60mm
DRAWN T. MEZHER	9/26/06
CHECKED	
APPROVED	

CMC Cleveland Motion Controls An EMERSON Company Torque Systems Division

TITLE
OUTLINE,N-2302
N-2304 ELECTROCRAFT REPLACEMENT

SIZE	DWG. NO.	REV.
D	33030-004	B

SCALE 1:1 SHEET 1 OF 1

CAD FILE: 33030-004.SLDDRW

ENTER DRIVE LETTER BELOW(S for Sine, T for Trap)

s

ENTER UNIT LETTER BELOW(M for SI, E for English)

m

SELECT WINDING FROM DROP DOWN LIST

Ke = T0(Kv = 10 Vpk/krpm)

MODEL NUMBER

CHECKED: SD	T0601 T0(Kv = 10 Vpk/krpm)	DRAWN:	AR
all values at 25 deg c unless stated otherwise	STD	CUST	APPROVED:
TORQUE & CURRENT AT 40 Deg C AMBIENT	YES		SD

Symbol		Units	^SPECIFICATIONS NOM	MIN	MAX
Tpk	Torque,peak stall	Nm			2.5
Tc	Torque,continuous stall	Nm	0.52	0.47	0.57
Ktp	Torque sensitivity (L TO L)	Nm/Apeak	0.083	0.07	0.09
Kt	Torque sensitivity (L TO L)	Nm/Arms	0.117	0.11	0.13
Ra	Armature resistance (L TO L)	ohms	1.35	1.15	1.55
La	Armature inductance (L TO L)	millihenry	1.7	1.19	2.21
Ip	Amps at Tpk	Apeak	30.1	27.1	33.1
Isp	Amps at Tc stall	Apeak	7.35	6.62	8.09
Is	Amps at Tc stall	Arms	5.20	4.68	5.72
Kep	Back EMF constant	Vpeak/Krpm	**10.00**	9.00	11.00
Ke	Back EMF constant	Vrms/Krpm	7.07	6.36	7.78
Kep	Back EMF constant	Vpeak/rad/sec	0.096	0.07	0.09
Ke	Back EMF constant	Vrms/rad/sec	0.068	0.06	0.07
Ep	Volts @ Tpk	Vpeak	40.64		
Fi	Viscous friction	Nm/Krpm	0.005		
Tf	Static friction torque	Nm	0.020		
Ec	volts @ Tc	Vpeak	14.884		
Jm	Moment of inertia	Kg-cm2	0.15593		
Tm	Time constant,mechanical	milliseconds	2.31		
Te	Time constant,electrical	milliseconds	1.26		
Rth	Thermal resistance	deg C/watt	1.30		
Tth	Time constant,thermal	minutes	15		
Oa	Max armature temp	deg C			155
Km	Figure of Merit	Nm/(amp-ohm)	0.07		
Nls	Max operating speed	rpmmax			8000
	# of motor poles		8		
Wt	weight	Kg	1.0		

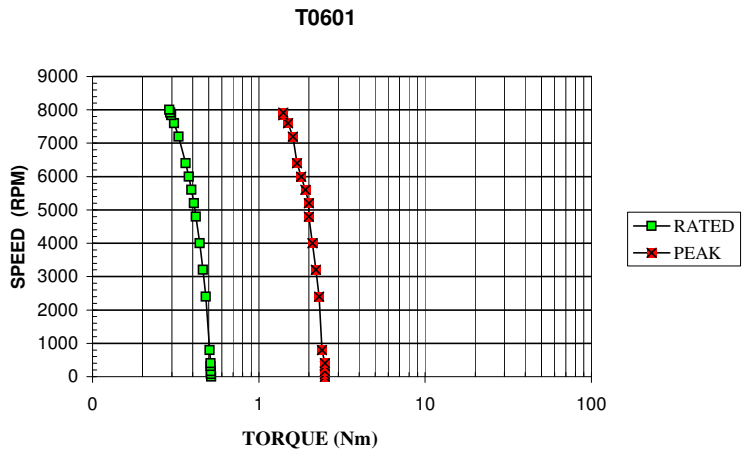

RPM	Trated Nm	Peak Voltage	Peak Current	RMS Current	Watts
0	0.516	14.9	7.34	5.19	82
400	0.512	18.7	7.28	5.15	106
800	0.506	22.6	7.20	5.09	129
1600	0.494	30.2	7.03	4.97	172
2400	0.479	37.8	6.81	4.82	212
3200	0.462	45.3	6.57	4.65	248
4000	0.442	52.7	6.29	4.45	278
4800	0.419	60.1	5.96	4.21	301
5600	0.393	67.3	5.59	3.95	318
6400	0.363	74.4	5.16	3.65	327
7200	0.329	81.5	4.68	3.31	325
8000	0.289	88.3	4.11	2.91	311

Rated Speed	Rated Torque
7200	0.3
Rated watts	248

MOTOR IS MOUNTED ON A 254 mmx254 mmx6.35 mm ALUMINUM PLATE IN A 40 DEG.C AMBIENT

SPEED/ TORQUE CURVE SHOWN IS RATED. TYPICAL VALUES ARE WITH IN +/- 10% OF RATING

OTHER SPECIFICATIONS

SINUSOIDAL DRIVE

REV(Dt)	Description
A(11/11/05)	Initial Release
B(2/08/06)	Add RMS Kt and Ke
C(2/24/06)	Add # of poles
D(4/6/06)	Sine SI Ke values corrected
E(2/20/07)	Add B8 winding

ENTER DRIVE LETTER BELOW(S for Sine, T for Trap)

s

ENTER UNIT LETTER BELOW(M for SI, E for English)

m

SELECT WINDING FROM DROP DOWN LIST

Ke = B8(Kv = 22 Vpk/krpm)

MODEL NUMBER

CHECKED: SD	T0601 B8(Kv = 22 Vpk/krpm)	DRAWN:	AR
all values at 25 deg c unless stated otherwise	STD	CUST	APPROVED:
TORQUE & CURRENT AT 40 Deg C AMBIENT	YES		SD

^SPECIFICATIONS

Symbol		Units	NOM	MIN	MAX
Tpk	Torque,peak stall	Nm			2.5
Tc	Torque,continuous stall	Nm	0.51	0.46	0.56
Ktp	Torque sensitivity (L TO L)	Nm/Apeak	0.182	0.16	0.20
Kt	Torque sensitivity (L TO L)	Nm/Arms	0.257	0.23	0.28
Ra	Armature resistance (L TO L)	ohms	6.7	5.70	7.71
La	Armature inductance (L TO L)	millihenry	8.2	5.74	10.66
Ip	Amps at Tpk	Apeak	13.7	12.3	15.1
Isp	Amps at Tc stall	Apeak	3.30	2.97	3.63
Is	Amps at Tc stall	Arms	2.33	2.10	2.56
Kep	Back EMF constant	Vpeak/Krpm	**22.00**	19.80	24.20
Ke	Back EMF constant	Vrms/Krpm	15.56	14.00	17.12
Kep	Back EMF constant	Vpeak/rad/sec	0.210	0.16	0.20
Ke	Back EMF constant	Vrms/rad/sec	0.149	0.13	0.16
Ep	Volts @ Tpk	Vpeak	91.79		
Fi	Viscous friction	Nm/Krpm	0.005		
Tf	Static friction torque	Nm	0.020		
Ec	volts @ Tc	Vpeak	33.165		
Jm	Moment of inertia	Kg-cm2	0.15593		
Tm	Time constant,mechanical	milliseconds	2.37		
Te	Time constant,electrical	milliseconds	1.22		
Rth	Thermal resistance	deg C/watt	1.30		
Tth	Time constant,thermal	minutes	15		
Oa	Max armature temp	deg C			155
Km	Figure of Merit	Nm/(amp-ohm)	0.07		
Nls	Max operating speed	rpmmax			8000
	# of motor poles		8		
Wt	weight	Kg	1.0		

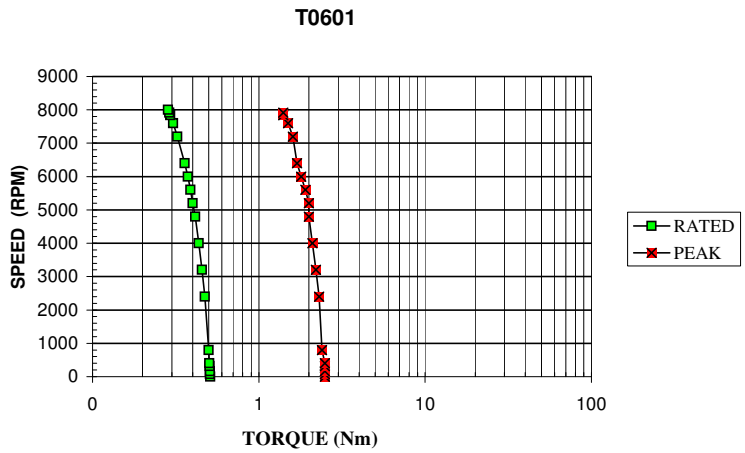

RPM	Trated Nm	Peak Voltage	Peak Current	RMS Current	Watts
0	0.510	33.2	3.30	2.33	82
400	0.505	41.7	3.27	2.31	105
800	0.500	50.1	3.23	2.28	128
1600	0.487	66.9	3.15	2.23	171
2400	0.473	83.6	3.06	2.16	210
3200	0.456	100.0	2.95	2.09	246
4000	0.436	116.3	2.82	1.99	274
4800	0.414	132.5	2.68	1.90	300
5600	0.388	148.4	2.51	1.77	314
6400	0.358	164.1	2.32	1.64	323
7200	0.324	179.5	2.10	1.48	320
8000	0.284	194.5	1.84	1.30	306

Rated Speed	Rated Torque
7200	0.3
Rated watts	245

MOTOR IS MOUNTED ON A 254 mmx254 mmx6.35 mm ALUMINUM PLATE IN A 40 DEG.C AMBIENT

SPEED/ TORQUE CURVE SHOWN IS RATED. TYPICAL VALUES ARE WITH IN +/- 10% OF RATING

OTHER SPECIFICATIONS

SINUSOIDAL DRIVE

REV(Dt)	Description
A(11/11/05)	Initial Release
B(2/08/06)	Add RMS Kt and Ke
C(2/24/06)	Add # of poles
D(4/6/06)	Sine SI Ke values corrected
E(2/20/07)	Add B8 winding

REVISIONS				
REV	ECN	DESCRIPTION	DATE	APP'D
A	DR8374	RELEASED	1/25/07	T.M.
B	ECN3064	ENCODER WAVEFORM BLOCK REPLACED	02/15/07	J.S.
C	ECN3230	MOTOR CONFIG. & NEMA NOTE ADDED	07/03/07	J.S.

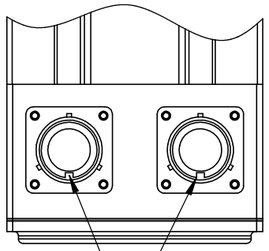

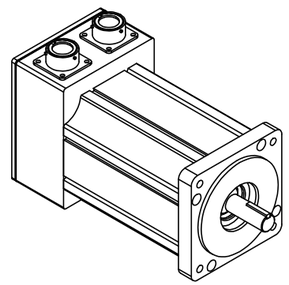

Clockwise rotation, viewed from the motor shaft, results in these waveforms.

ENCODER WAVEFORMS

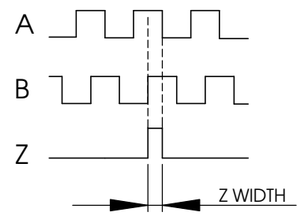

Z GATED TO A&B:
Z WIDTH MIN = 80°
Z WIDTH MAX = A&B TRUE

Motor Waveforms

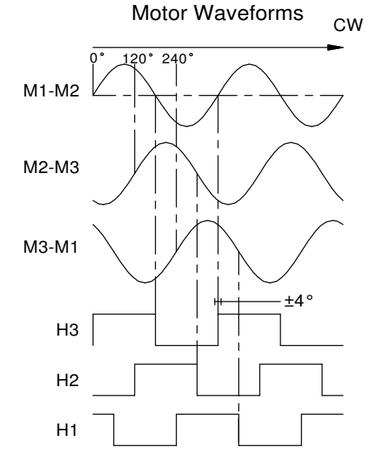

ENCODER CONN WIRING CODE	
FROM	TO PIN
OUTPUT A	A
OUTPUT A'	B
OUTPUT B	C
OUTPUT B'	D
OUTPUT Z	E
OUTPUT Z'	F
CASE GROUND	G
N/C	H
+ 5 VDC	J
+ 5 VDC	K
COMMON	L
COMMON	M
N/C	N
N/C	P
THERMOSTAT	R
THERMOSTAT	S
OUTPUT H1	T
OUTPUT H3	U
OUTPUT H2	V

MOTOR CONN. WIRING CODE	
FROM	TO PIN
MOTOR M1	A
MOTOR M2	B
MOTOR M3	C
CASE	D

NOTE:
TEMPERATURE SENSOR:
CONTACTS: NORMALLY CLOSED
MAX AMPS: 6 AMP
RATED VOLTAGE: 24VDC

C **USE MOTOR CONFIGURATION FILE FROM CMC PER MOTOR MODEL NUMBER**

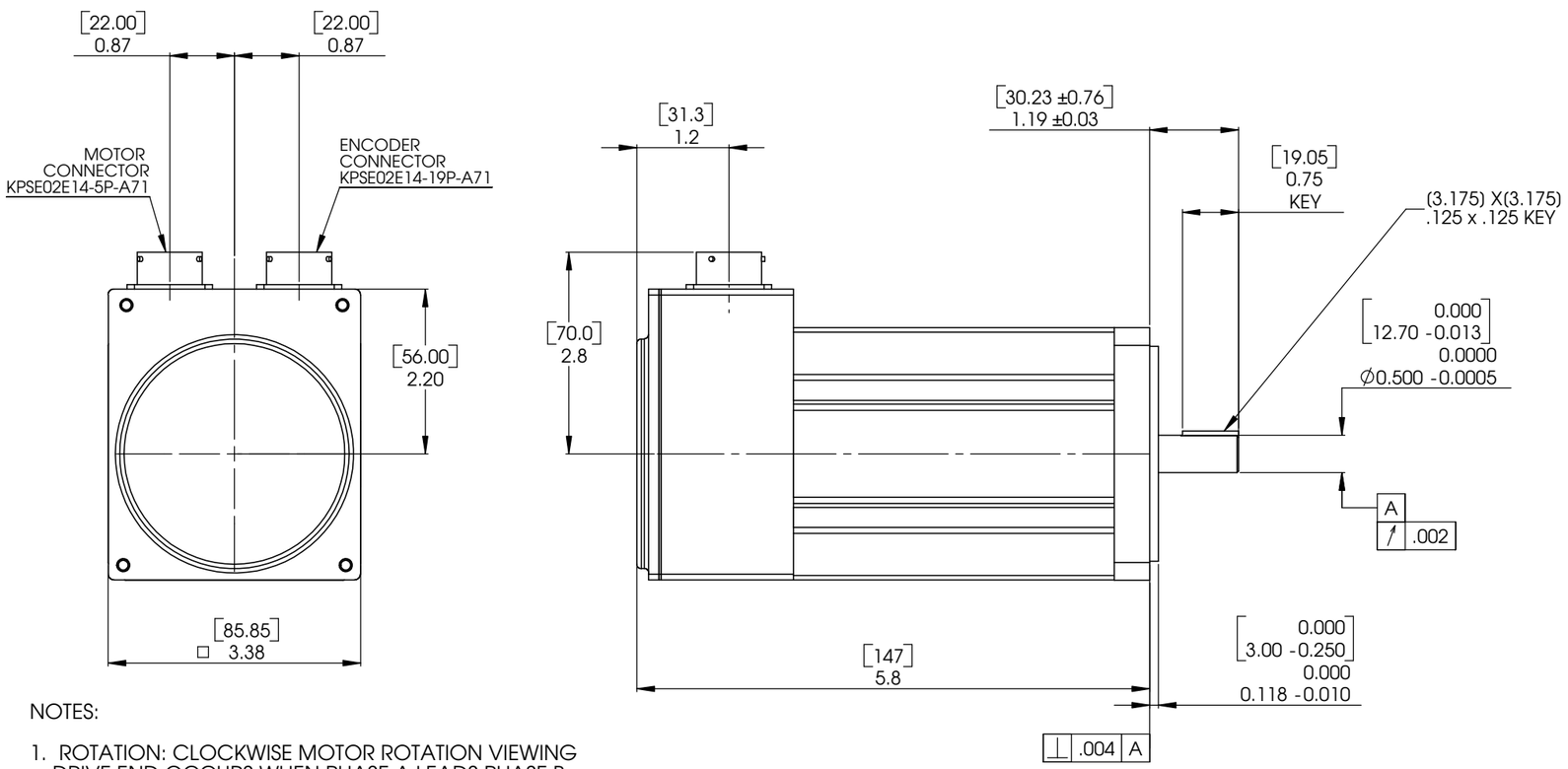

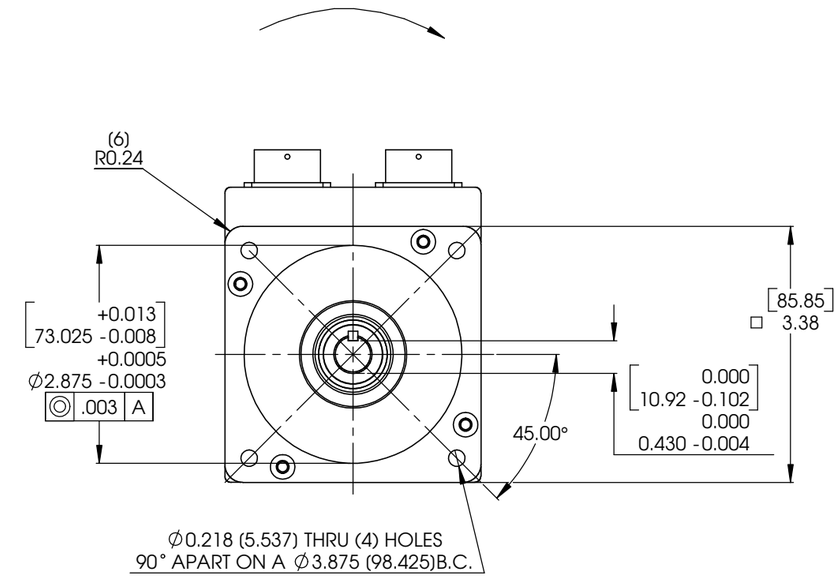

NOTES:

1. ROTATION: CLOCKWISE MOTOR ROTATION VIEWING DRIVE END OCCURS WHEN PHASE A LEADS PHASE B, PHASE B LEADS PHASE C.

2. THE INDEX PULSE OCCURS WHEN FACING THE MOTOR, THE SHAFT KEYWAY IS ORIENTED 90°±10° CLOCLWISE (MECHANICAL) AWAY FROM THE CONNECTORS

C **FRAME: T0851 WITH NEMA 34 FLANGE**

DIMENSIONS IN BRACKETS (DUAL) ARE IN MILLIMETERS

CAD GENERATED DRAWING, DO NOT MANUALLY UPDATE

NOTICE
Information contained herein is the sole property of Cleveland Motion Controls, Torque Systems Division. This may not be reproduced, copied or traced in any manner in part or whole without the written permission by Cleveland Motion Controls, Torque Systems Division.

THIRD ANGLE PROJECTION

Dimensions in millimeters (mm) and apply after processing. Remove Burrs & Sharp Edges. Interpret dim. and tol. per ASME Y14.5M-1994.

MILLIMETERS (mm) TOLERANCES UNLESS OTHERWISE SPECIFIED

X	+/- 2.5
XX	+/- 0.25
XXX	+/- 0.100
ANGLES	+/- 0°-30'

MATERIAL: N/A
FINISH: N/A

APPLICATION	
NEXT ASSY	USED ON: 85mm
DRAWN: T. MEZHER 1/25/07	
CHECKED	
APPROVED	

Cleveland Motion Controls
An EMC Company Torque Systems Division

TITLE: OUTLINE N-3406, N-3412 ELECTROCRAFT REPLACEMENT

SIZE D | DWG. NO. 31030-078 | REV. C

SCALE 1:1 | SHEET 1 OF 1

CAD FILE: 31030-078.SLDDRW

ENTER DRIVE LETTER BELOW(S for Sine, T for Trap)

s

ENTER UNIT LETTER BELOW(M for SI, E for English)

m

SELECT WINDING FROM DROP DOWN LIST

Ke = A0(Ke = 20 Vpk/krpm)

MODE NUMBER

CHECKED: SD	T0851 A0(Ke = 20 Vpk/krpm)	DRAWN:	AR
all values at 25 deg c unless stated otherwise	STD	CUST	APPROVED:
TORQUE & CURRENT AT 40 Deg C AMBIENT	YES		SD

Symbol		Units	NOM	MIN	MAX
		^SPECIFICATIONS			
Tpk	Torque,peak stall	Nm			6.4
Tc	Torque,continuous stall	Nm	2.02	1.82	2.22
Ktp	Torque sensitivity (L TO L)	Nm/Apeak	0.165	0.149	0.182
Kt	Torque sensitivity (L TO L)	Nm/Arms	0.234	0.211	0.257
Ra	Armature resistance (L TO L)	ohms	0.36	0.31	0.41
La	Armature inductance (L TO L)	millihenry	1.9	1.33	2.47
Ip	Amps at Tpk	Apeak	38.9	35.0	42.8
Isp	Amps at Tc stall	Apeak	14.37	12.93	15.81
Is	Amps at Tc stall	Arms	10.16	9.14	11.18
Kep	Back EMF constant	Vpeak/Krpm	**20.00**	18.00	22.00
Ke	Back EMF constant	Vrms/Krpm	14.14	12.73	15.55
Kep	Back EMF constant	Vpeak/rad/sec	0.191	0.149	0.182
Ke	Back EMF constant	Vrms/rad/sec	0.135	0.122	0.149
Ep	Volts @ Tpk	Vpeak	14.00		
Fi	Viscous friction	Nm/Krpm	0.009		
Tf	Static friction torque	Nm	0.019		
Ec	volts @ Tc	Vpeak	7.760		
Jm	Moment of inertia	Kg-cm2	0.7345		
Tm	Time constant,mech	milliseconds	0.72		
Te	Time constant,elect	milliseconds	5.28		
Rth	Thermal resistance	deg C/watt	1.35		
Tth	Time constant,thermal	minutes	20		
Oa	Max armature temp	deg C			155
Km	Figure of Merit	Nm/(amp-ohm)	0.28		
Nls	Max operating speed	rpmmax			6000
	# of motor pole		8		
Wt	weight	Kg	2.8		

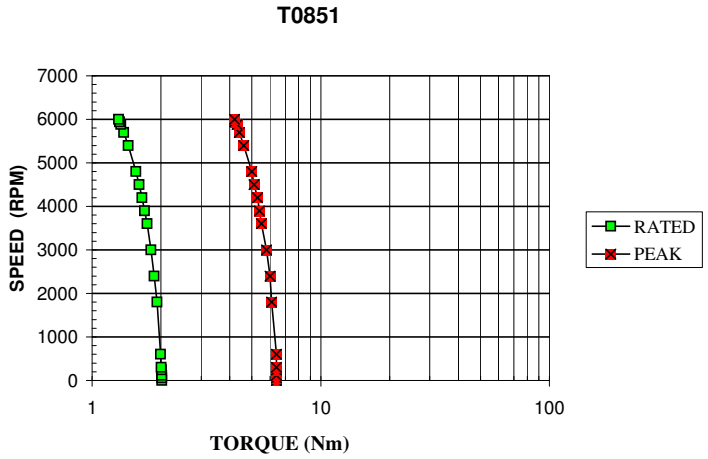

RPM	Trated Nm	Peak Voltage	Peak Current	RMS Current	Watts
0	2.020	7.8	14.37	10.16	84
300	2.009	13.7	14.29	10.10	157
600	1.996	19.7	14.20	10.04	229
1200	1.963	31.5	13.96	9.87	369
1800	1.922	43.4	13.67	9.67	502
2400	1.871	55.2	13.31	9.41	625
3000	1.810	66.9	12.87	9.10	736
3600	1.738	78.7	12.36	8.74	833
4200	1.654	90.4	11.76	8.32	912
4800	1.556	102.0	11.07	7.83	970
5400	1.441	113.5	10.25	7.25	1002
6000	1.306	125.0	9.29	6.57	1001

Rated Speed	Rated Torque
6000	1.3
Rated watts	822

MOTOR IS MOUNTED ON A 254 mmx254 mmx6.35 mm ALUMINUM PLATE IN A 40 DEG.C AMBIENT

SPEED/ TORQUE CURVE SHOWN IS RATED. TYPICAL VALUES ARE WITH IN +/- 10% OF RATING

OTHER SPECIFICATIONS

SINUSOIDAL DRIVE

REV(Dt)	Description
A(11/11/05)	Initial release
B(2/8/06)	Add RMS Kt and Ke
C(3/20/06)	Add # of poles and reconfigured speed/torque
D(4/6/06)	Sine SI Ke values corrected

ENTER DRIVE LETTER BELOW(S for Sine, T for Trap)

s

ENTER UNIT LETTER BELOW(M for SI, E for English)

m

SELECT WINDING FROM DROP DOWN LIST

Ke = C0(Ke = 40 Vpk/krpm)

MODE NUMBER

CHECKED: SD	T0851 C0(Ke = 40 Vpk/krpm)	DRAWN:	AR
all values at 25 deg c unless stated otherwise	STD	CUST	APPROVED:
TORQUE & CURRENT AT 40 Deg C AMBIENT	YES		SD

Symbol		Units	NOM	MIN	MAX
		^SPECIFICATIONS			
Tpk	Torque,peak stall	Nm			6.4
Tc	Torque,continuous stall	Nm	2.01	1.81	2.21
Ktp	Torque sensitivity (L TO L)	Nm/Apeak	0.331	0.298	0.364
Kt	Torque sensitivity (L TO L)	Nm/Arms	0.468	0.421	0.515
Ra	Armature resistance (L TO L)	ohms	1.45	1.23	1.67
La	Armature inductance (L TO L)	millihenry	7.6	5.32	9.88
Ip	Amps at Tpk	Apeak	19.5	17.6	21.5
Isp	Amps at Tc stall	Apeak	7.16	6.44	7.88
Is	Amps at Tc stall	Arms	5.06	4.55	5.57
Kep	Back EMF constant	Vpeak/Krpm	**40.00**	36.00	44.00
Ke	Back EMF constant	Vrms/Krpm	28.29	25.46	31.12
Kep	Back EMF constant	Vpeak/rad/sec	0.382	0.298	0.364
Ke	Back EMF constant	Vrms/rad/sec	0.270	0.243	0.297
Ep	Volts @ Tpk	Vpeak	28.28		
Fi	Viscous friction	Nm/Krpm	0.009		
Tf	Static friction torque	Nm	0.019		
Ec	volts @ Tc	Vpeak	15.573		
Jm	Moment of inertia	Kg-cm2	0.7345		
Tm	Time constant,mech	milliseconds	0.73		
Te	Time constant,elect	milliseconds	5.24		
Rth	Thermal resistance	deg C/watt	1.35		
Tth	Time constant,thermal	minutes	20		
Oa	Max armature temp	deg C			155
Km	Figure of Merit	Nm/(amp-ohm)	0.27		
Nls	Max operating speed	rpmmax			6000
	# of motor pole		8		
Wt	weight	Kg	2.8		

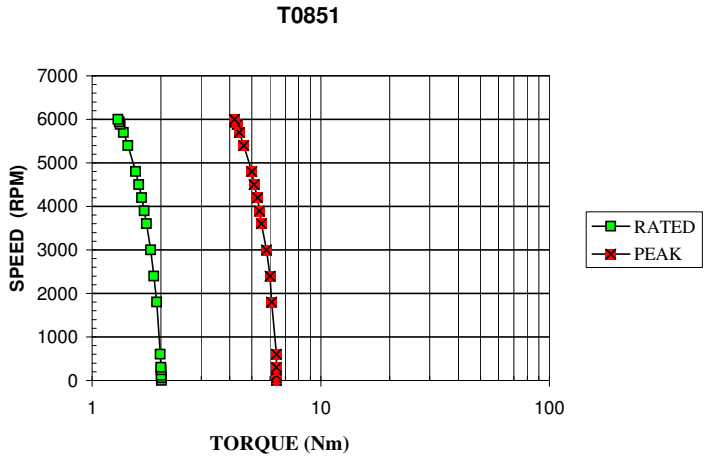

MOTOR IS MOUNTED ON A 254 mmx254 mmx6.35 mm ALUMINUM PLATE IN A 40 DEG.C AMBIENT

SPEED/ TORQUE CURVE SHOWN IS RATED. TYPICAL VALUES ARE WITH IN +/- 10% OF RATING

OTHER SPECIFICATIONS

SINUSOIDAL DRIVE

REV(Dt)	Description
A(11/11/05)	Initial release
B(2/8/06)	Add RMS Kt and Ke
C(3/20/06)	Add # of poles and reconfigured speed/torque
D(4/6/06)	Sine SI Ke values corrected

RPM	Trated Nm	Peak Voltage	Peak Current	RMS Current	Watts
0	2.012	15.6	7.16	5.06	84
300	2.001	27.5	7.12	5.03	156
600	1.988	39.4	7.07	5.00	229
1200	1.956	63.1	6.96	4.92	368
1800	1.915	86.8	6.81	4.82	501
2400	1.864	110.4	6.63	4.69	623
3000	1.803	133.9	6.41	4.53	733
3600	1.732	157.4	6.16	4.36	831
4200	1.648	180.7	5.86	4.14	908
4800	1.550	204.0	5.51	3.90	967
5400	1.435	227.1	5.10	3.61	998
6000	1.300	250.0	4.62	3.27	996

Rated Speed	Rated Torque
6000	1.3
Rated watts	818

REVISIONS				
REV	ECN	DESCRIPTION	DATE	APP'D
A	DR8318	RELEASED	11/1/06	T.M.
B	ECN3230	ADDED CONFIG AND FRAME NOTES	07/03/07	J.S.

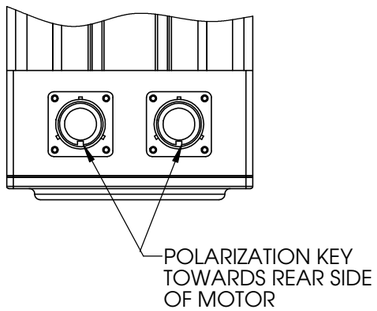

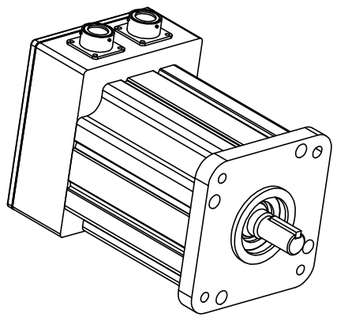

Clockwise rotation, viewed from the motor shaft, results in these waveforms.

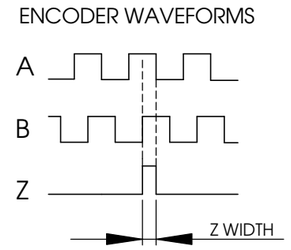

Z GATED TO A&B:
Z WIDTH MIN = 80°
Z WIDTH MAX = A&B TRUE

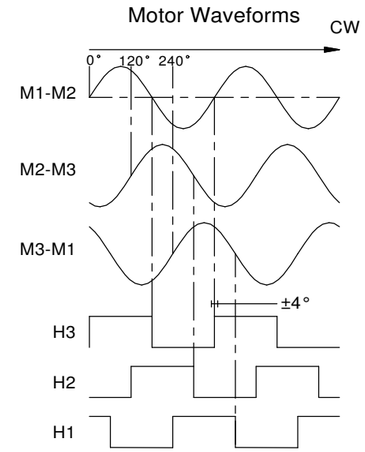

ENCODER CONN WIRING CODE	
FROM	TO PIN
OUTPUT A	A
OUTPUT A'	B
OUTPUT B	C
OUTPUT B'	D
OUTPUT Z	E
OUTPUT Z'	F
CASE GROUND	G
N/A	H
+ 5 VDC	J
+ 5 VDC	K
COMMON	L
COMMON	M
N/A	N
N/A	P
THERMOSTAT	R
THERMOSTAT	S
OUTPUT W (H1)	T
OUTPUT U (H3)	U
OUTPUT V (H2)	V

MOTOR CONN. WIRING CODE	
FROM	TO PIN
MOTOR M1	A
MOTOR M2	B
MOTOR M3	C
CASE	D

NOTE:
TEMPERATURE SENSOR:
CONTACTS: NORMALLY CLOSED
MAX AMPS: 6 AMP
RATED VOLTAGE: 24VDC

[B] USE MOTOR CONFIGURATION FILE FROM CMC PER MOTOR MODEL NUMBER

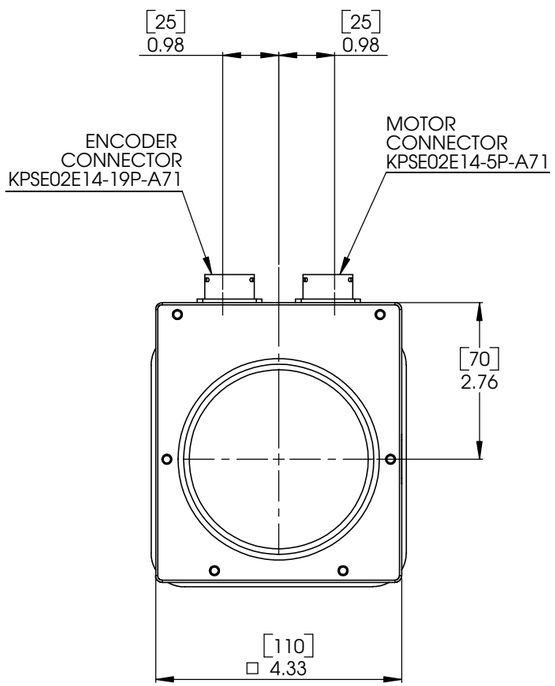

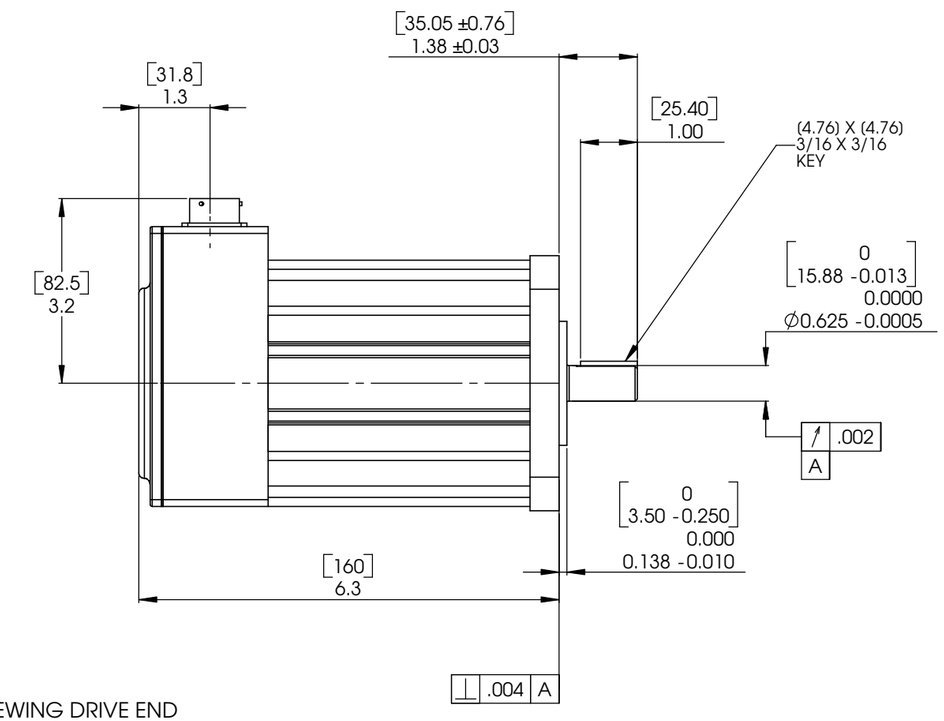

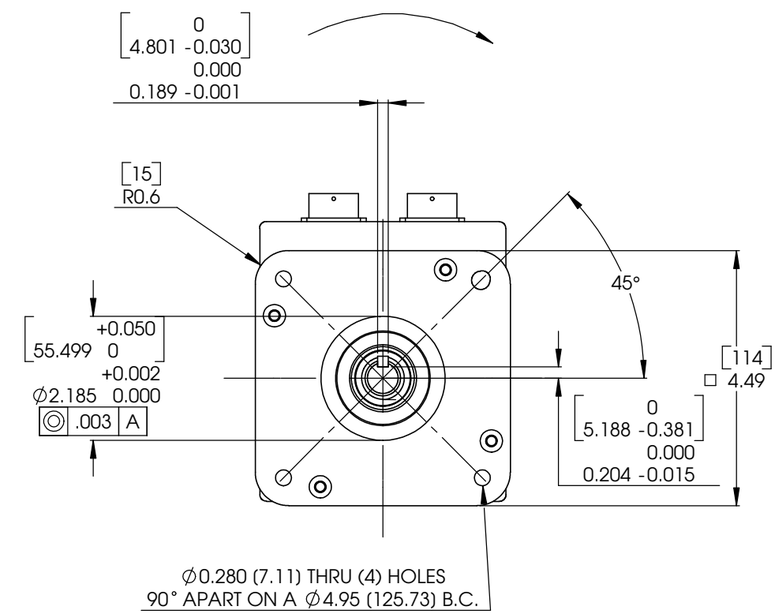

NOTES:

1. ROTATION: CLOCKWISE MOTOR ROTATION VIEWING DRIVE END OCCURS WHEN PHASE A LEADS PHASE B, PHASE B LEADS PHASE C.
2. THE INDEX PULSE OCCURS WHEN FACING THE MOTOR, THE SHAFT KEYWAY IS ORIENTED 90° ± 10° CLOCKWISE (MECHANICAL) FROM CONNECTORS.

[B] FRAME: T1101 WITH NEMA 42 FLANGE

DIMENSIONS IN BRACKETS (DUAL) ARE IN MILLIMETERS

NOTICE
Information contained herein is the sole property of Cleveland Motion Controls, Torque Systems Division. This may not be reproduced, copied or traced in any manner in part or whole without the written permission by Cleveland Motion Controls, Torque Systems Division.

THIRD ANGLE PROJECTION

Dimensions in millimeters (mm) and apply after processing. Remove Burrs & Sharp Edges. Interpret dim. and tol. per ASME Y14.5M-1994.

MILLIMETERS (mm) TOLERANCES UNLESS OTHERWISE SPECIFIED	
X	+/- 2.5
XX	+/- 0.25
XXX	+/- 0.100
ANGLES	+/- 0°-30'
MATERIAL	N/A
FINISH	N/A

CAD GENERATED DRAWING, DO NOT MANUALLY UPDATE

APPLICATION	
NEXT ASSY	USED ON
	110mm
DRAWN T. MEZHER 1/25/07	
CHECKED	
APPROVED	

Cleveland Motion Controls
An EMS Company Torque Systems Division

TITLE
OUTLINE N-4214, N-4220
ELECTROCRAFT REPLACEMENT

SIZE D | DWG. NO. 32030-047 | REV. B
SCALE: 1:1 | SHEET 1 OF 1

CAD FILE: 32030-047.SLDDRW

ENTER DRIVE LETTER BELOW(S for Sine, T for Trap)

s

ENTER UNIT LETTER BELOW(M for SI, E for English)

m

SELECT WINDING FROM DROP DOWN LIST

Ke = D0(Ke = 50 Vpk/krpm)

MODEL NUMBER

CHECKED: SD	T1101 D0(Ke = 50 Vpk/krpm)	DRAWN:	AR
all values at 25 deg c unless stated otherwise	STD	CUST	APPROVED:
TORQUE & CURRENT AT 40 Deg C AMBIENT	YES		SD

Symbol		^SPECIFICATIONS Units	NOM	MIN	MAX
Tpk	Torque,peak stall	Nm			12.0
Tc	Torque,continuous stall	Nm	4.85	4.37	5.34
Ktp	Torque sensitivity (L TO L)	Nm/Apeak	0.413	0.372	0.454
Kt	Torque sensitivity (L TO L)	Nm/Arms	0.585	0.527	0.644
Ra	Armature resistance (L TO L)	ohms	1.04	0.88	1.20
La	Armature inductance (L TO L)	millihenry	5	3.50	6.50
Ip	Amps at Tpk	Apeak	29.0	26.1	31.9
Isp	Amps at Tc stall	Apeak	13.79	12.41	15.17
Is	Amps at Tc stall	Arms	9.75	8.78	10.73
Kep	Back EMF constant	Vpeak/Krpm	**50.00**	45.00	55.00
Ke	Back EMF constant	Vrms/Krpm	**35.36**	31.82	38.90
Kep	Back EMF constant	Vpeak/rad/sec	0.478	0.372	0.454
Ke	Back EMF constant	Vrms/rad/sec	0.338	0.304	0.372
Ep	Volts @ Tpk	Vpeak	30.16		
Fi	Viscous friction	Nm/Krpm	0.031		
Tf	Static friction torque	Nm	0.034		
Ec	volts @ Tc	Vpeak	21.512		
Jm	Moment of inertia	Kg-cm2	2.37288		
Tm	Time constant,mech	milliseconds	1.08		
Te	Time constant,elect	milliseconds	4.81		
Rth	Thermal resistance	deg C/watt	0.51		
Tth	Time constant,thermal	minutes	25		
Oa	Max armature temp	deg C			155
Km	Figure of Merit	Nm/(amp-ohm)	0.406		
Nls	Max operating speed	rpmmax			6000
	# of motor poles		8		
Wt	weight	Kg	4.9		

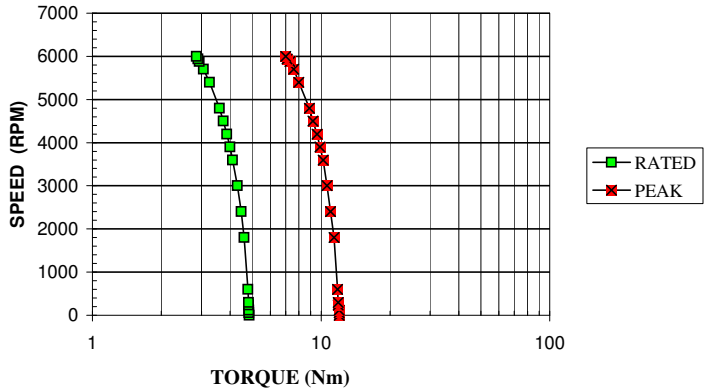

RPM	Trated Nm	Peak Voltage	Peak Current	RMS Current	Watts
0	4.845	21.5	13.79	9.75	222
300	4.821	36.4	13.72	9.70	398
600	4.791	51.3	13.63	9.64	572
1200	4.711	80.9	13.41	9.48	907
1800	4.605	110.4	13.10	9.26	1221
2400	4.471	139.8	12.72	8.99	1510
3000	4.306	169.1	12.25	8.66	1766
3600	4.108	198.2	11.69	8.27	1983
4200	3.871	227.2	11.02	7.79	2146
4800	3.590	255.9	10.22	7.23	2247
5400	3.255	284.4	9.26	6.55	2266
6000	2.847	312.6	8.10	5.73	2182

Rated Speed	Rated Torque
5400	3.3
Rated watts	1844

MOTOR IS MOUNTED ON A 304.8 mmx304.8 mmx12.7 mm ALUMINUM PLATE IN A 40 DEG.C AMBIENT

SPEED/ TORQUE CURVE SHOWN IS RATED. TYPICAL VALUES ARE WITH IN +/- 10% OF RATING

OTHER SPECIFICATIONS

SINUSOIDAL DRIVE

REV(Dt)	Description
A(11/11/05)	Initial Release
B(2/10/06)	Add RMS Kt and Ke
C(3/20/06)	Add # of poles
D(4/6/06)	Sine SI Ke values corrected
E(2/20/07)	Add C6 and D3 winding
F(5/07/07)	Reconfigured speed/torque

ENTER DRIVE LETTER BELOW(S for Sine, T for Trap)

s

ENTER UNIT LETTER BELOW(M for SI, E for English)

m

SELECT WINDING FROM DROP DOWN LIST

Ke = C6(Ke = 34 Vpk/krpm)

MODEL NUMBER

CHECKED: SD	T1101 C6(Ke = 34 Vpk/krpm)	DRAWN:	AR
all values at 25 deg c unless stated otherwise	STD	CUST	APPROVED:
TORQUE & CURRENT AT 40 Deg C AMBIENT	YES		SD

Symbol		^SPECIFICATIONS Units	NOM	MIN	MAX
Tpk	Torque,peak stall	Nm			12.0
Tc	Torque,continuous stall	Nm	5.07	4.56	5.58
Ktp	Torque sensitivity (L TO L)	Nm/Apeak	0.281	0.253	0.309
Kt	Torque sensitivity (L TO L)	Nm/Arms	0.398	0.358	0.438
Ra	Armature resistance (L TO L)	ohms	.44	0.37	0.51
La	Armature inductance (L TO L)	millihenry	2.3	1.61	2.99
Ip	Amps at Tpk	Apeak	42.6	38.3	46.9
Isp	Amps at Tc stall	Apeak	21.20	19.08	23.32
Is	Amps at Tc stall	Arms	14.99	13.49	16.49
Kep	Back EMF constant	Vpeak/Krpm	**34.00**	30.60	37.40
Ke	Back EMF constant	Vrms/Krpm	**24.05**	21.65	26.46
Kep	Back EMF constant	Vpeak/rad/sec	0.325	0.253	0.309
Ke	Back EMF constant	Vrms/rad/sec	0.230	0.207	0.253
Ep	Volts @ Tpk	Vpeak	18.74		
Fi	Viscous friction	Nm/Krpm	0.031		
Tf	Static friction torque	Nm	0.034		
Ec	volts @ Tc	Vpeak	13.992		
Jm	Moment of inertia	Kg-cm2	2.37288		
Tm	Time constant,mech	milliseconds	0.99		
Te	Time constant,elect	milliseconds	5.23		
Rth	Thermal resistance	deg C/watt	0.51		
Tth	Time constant,thermal	minutes	25		
Oa	Max armature temp	deg C			155
Km	Figure of Merit	Nm/(amp-ohm)	0.424		
Nls	Max operating speed	rpmmax			6000
	# of motor poles		8		
Wt	weight	Kg	4.9		

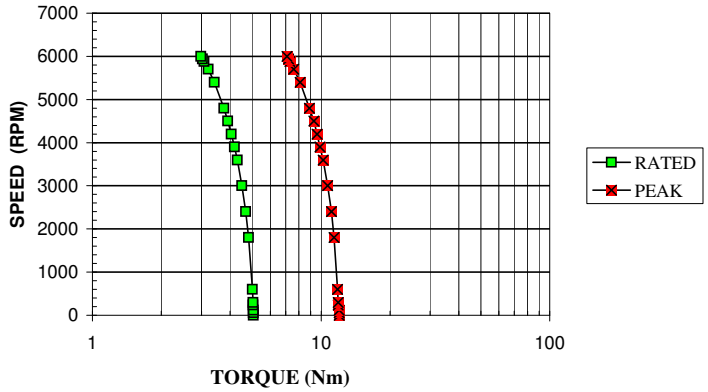

RPM	Trated Nm	Peak Voltage	Peak Current	RMS Current	Watts
0	5.066	14.0	21.20	14.99	222
300	5.042	24.1	21.10	14.92	407
600	5.011	34.2	20.97	14.83	588
1200	4.928	54.4	20.62	14.58	939
1800	4.818	74.5	20.16	14.26	1270
2400	4.678	94.5	19.58	13.85	1574
3000	4.507	114.4	18.86	13.34	1843
3600	4.301	134.3	18.00	12.73	2069
4200	4.054	154.0	16.97	12.00	2241
4800	3.762	173.6	15.74	11.13	2347
5400	3.411	193.0	14.27	10.09	2370
6000	2.986	212.3	12.50	8.84	2286

Rated Speed	Rated Torque
5400	3.4
Rated watts	1932

MOTOR IS MOUNTED ON A 304.8 mmx304.8 mmx12.7 mm ALUMINUM PLATE IN A 40 DEG.C AMBIENT

SPEED/ TORQUE CURVE SHOWN IS RATED. TYPICAL VALUES ARE WITH IN +/- 10% OF RATING

OTHER SPECIFICATIONS

SINUSOIDAL DRIVE

REV(Dt)	Description
A(11/11/05)	Initial Release
B(2/10/06)	Add RMS Kt and Ke
C(3/20/06)	Add # of poles
D(4/6/06)	Sine SI Ke values corrected
E(2/20/07)	Add C6 and D3 winding
F(5/07/07)	Reconfigured speed/torque

REVISIONS				
REV	ECN	DESCRIPTION	DATE	APP'D
A	DR8318	RELEASED	11/1/06	T.M.
B	ECN3230	ADDED MTR CONFIG AND FRAME NOTES	07/03/07	J.S.

Clockwise rotation, viewed from the motor shaft, results in these waveforms.

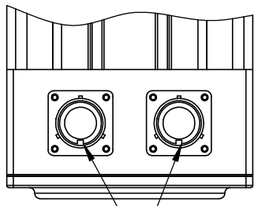

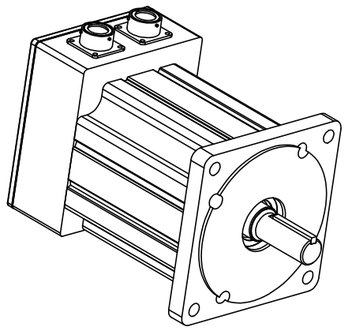

ENCODER WAVEFORMS

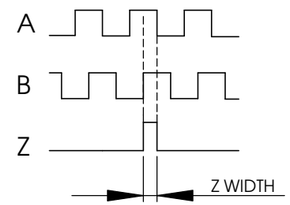

Z GATED TO A&B:
Z WIDTH MIN = 80°
Z WIDTH MAX = A&B TRUE

Motor Waveforms

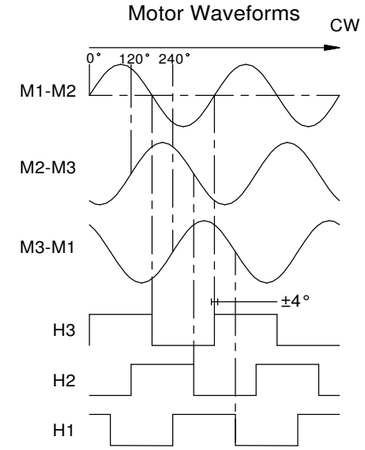

ENCODER CONN WIRING CODE	
FROM	TO PIN
OUTPUT A	A
OUTPUT A'	B
OUTPUT B	C
OUTPUT B'	D
OUTPUT Z	E
OUTPUT Z'	F
CASE GROUND	G
N/A	H
+ 5 VDC	J
+ 5 VDC	K
COMMON	L
COMMON	M
N/A	N
N/A	P
THERMOSTAT	R
THERMOSTAT	S
OUTPUT W (H1)	T
OUTPUT U (H3)	U
OUTPUT V (H2)	V

MOTOR CONN. WIRING CODE	
FROM	TO PIN
MOTOR M1	A
MOTOR M2	B
MOTOR M3	C
CASE	D

NOTE:
TEMPERATURE SENSOR:
CONTACTS: NORMALLY CLOSED
MAX AMPS: 6 AMP
RATED VOLTAGE: 24VDC

B USE MOTOR CONFIGURATION FILE FROM CMC PER MOTOR MODEL NUMBER

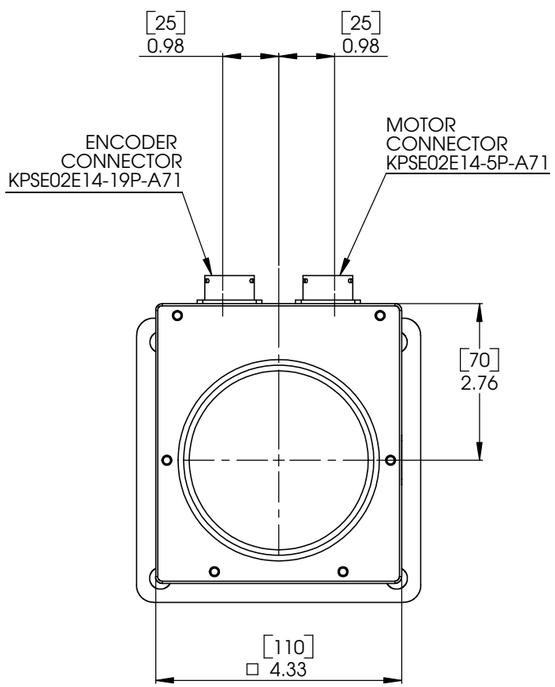

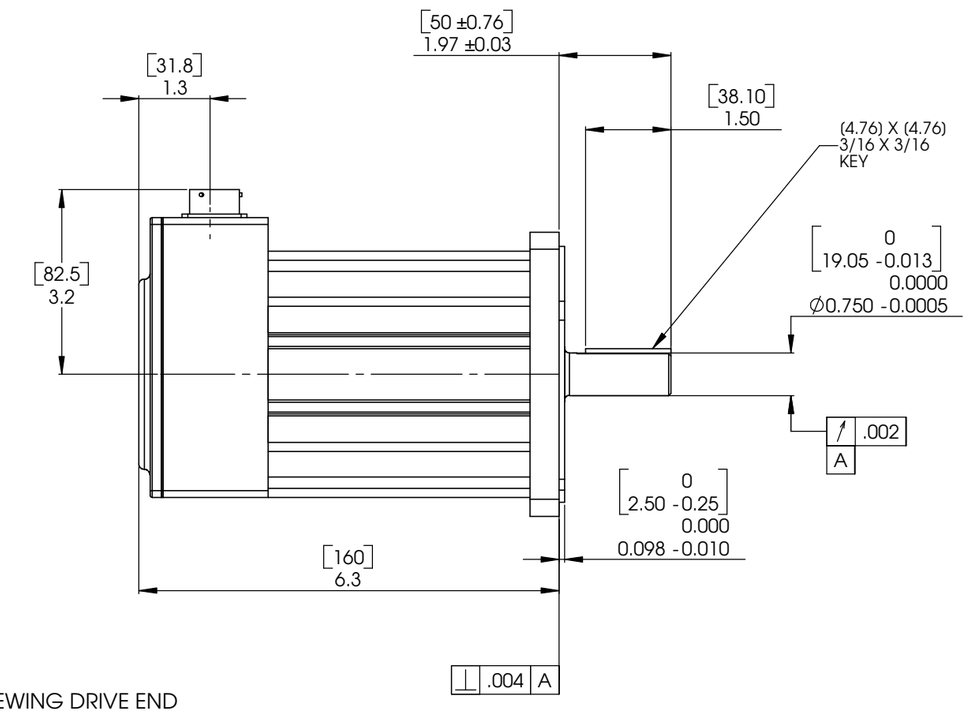

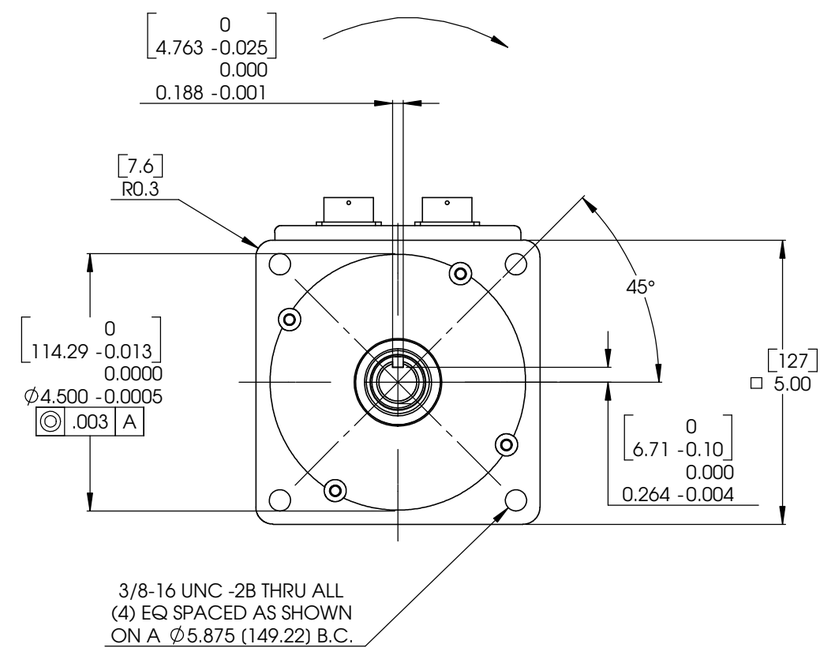

NOTES:

1. ROTATION: CLOCKWISE MOTOR ROTATION VIEWING DRIVE END OCCURS WHEN PHASE A LEADS PHASE B, PHASE B LEADS PHASE C.
2. THE INDEX PULSE OCCURS WHEN FACING THE MOTOR, THE SHAFT KEYWAY IS ORIENTED 90° ± 10° CLOCKWISE (MECHANICAL) FROM CONNECTORS.

B FRAME: T1101 WITH NEMA 56 FLANGE

DIMENSIONS IN BRACKETS (DUAL) ARE IN MILLIMETERS

CAD GENERATED DRAWING, DO NOT MANUALLY UPDATE

NOTICE
Information contained herein is the sole property of Cleveland Motion Controls, Torque Systems Division. This may not be reproduced, copied or traced in any manner in part or whole without the written permission by Cleveland Motion Controls, Torque Systems Division.

THIRD ANGLE PROJECTION

Dimensions in millimeters (mm) and apply after processing. Remove burrs & sharp edges. Interpret drawing and tol. per ASME Y14.5M-1994.

MILLIMETERS (mm) TOLERANCES UNLESS OTHERWISE SPECIFIED	
X	+/- 2.5
XX	+/- 0.25
XXX	+/- 0.100
ANGLES	+/- 0°-30'
MATERIAL	N/A
FINISH	N/A

APPLICATION	
NEXT ASSY	USED ON
	110mm
DRAWN M. MEZHER	1/29/07
CHECKED	
APPROVED	

Cleveland Motion Controls
An EMC Company
Torque Systems Division

TITLE
OUTLINE N-5630
ELECTROCRAFT REPLACEMENT

SIZE D | DWG. NO. 32030-050 | REV. B

SCALE 1:1 | SHEET 1 OF 1

CAD FILE: 32030-050.SLDDRW

ENTER DRIVE LETTER BELOW(S for Sine, T for Trap)

s

ENTER UNIT LETTER BELOW(M for SI, E for English)

m

SELECT WINDING FROM DROP DOWN LIST

Ke = D3(Ke = 47 Vpk/krpm)

MODEL NUMBER

CHECKED:	SD	T1101 D3(Ke = 47 Vpk/krpm)	DRAWN: AR
all values at 25 deg c unless stated otherwise		STD / CUST	APPROVED:
TORQUE & CURRENT AT 40 Deg C AMBIENT		YES	SD

Symbol		^SPECIFICATIONS Units	NOM	MIN	MAX
Tpk	Torque,peak stall	Nm			12.0
Tc	Torque,continuous stall	Nm	4.98	4.48	5.48
Ktp	Torque sensitivity (L TO L)	Nm/Apeak	0.389	0.350	0.428
Kt	Torque sensitivity (L TO L)	Nm/Arms	0.550	0.495	0.605
Ra	Armature resistance (L TO L)	ohms	.87	0.74	1.00
La	Armature inductance (L TO L)	millihenry	4.4	3.08	5.72
Ip	Amps at Tpk	Apeak	30.8	27.7	33.9
Isp	Amps at Tc stall	Apeak	15.08	13.57	16.59
Is	Amps at Tc stall	Arms	10.66	9.59	11.73
Kep	Back EMF constant	Vpeak/Krpm	**47.00**	42.30	51.70
Ke	Back EMF constant	Vrms/Krpm	**33.24**	29.92	36.56
Kep	Back EMF constant	Vpeak/rad/sec	0.449	0.350	0.428
Ke	Back EMF constant	Vrms/rad/sec	0.318	0.286	0.350
Ep	Volts @ Tpk	Vpeak	26.80		
Fi	Viscous friction	Nm/Krpm	0.031		
Tf	Static friction torque	Nm	0.034		
Ec	volts @ Tc	Vpeak	19.679		
Jm	Moment of inertia	Kg-cm2	2.37288		
Tm	Time constant,mech	milliseconds	1.02		
Te	Time constant,elect	milliseconds	5.06		
Rth	Thermal resistance	deg C/watt	0.51		
Tth	Time constant,thermal	minutes	25		
Oa	Max armature temp	deg C			155
Km	Figure of Merit	Nm/(amp-ohm)	0.417		
Nls	Max operating speed	rpmmax			6000
	# of motor poles		8		
Wt	weight	Kg	4.9		

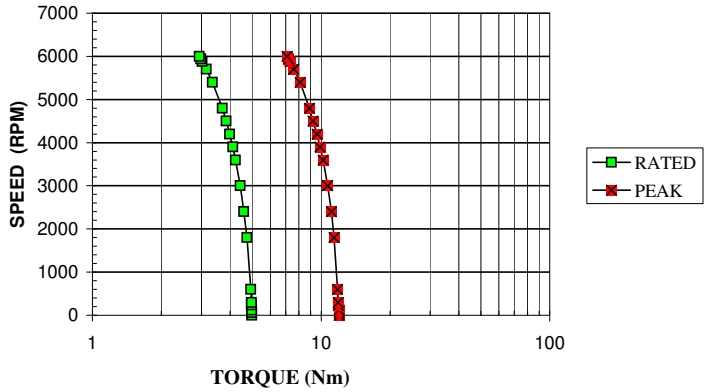

RPM	Trated Nm	Peak Voltage	Peak Current	RMS Current	Watts
0	4.981	19.7	15.08	10.66	222
300	4.957	33.7	15.00	10.61	404
600	4.926	47.7	14.91	10.54	581
1200	4.845	75.5	14.66	10.37	927
1800	4.736	103.3	14.33	10.13	1250
2400	4.598	131.0	13.92	9.84	1549
3000	4.430	158.5	13.41	9.48	1813
3600	4.226	185.9	12.79	9.04	2033
4200	3.984	213.1	12.06	8.53	2205
4800	3.696	240.2	11.19	7.91	2308
5400	3.351	267.0	10.14	7.17	2329
6000	2.933	293.6	8.88	6.28	2246

Rated Speed	Rated Torque
5400	3.4
Rated watts	1898

MOTOR IS MOUNTED ON A 304.8 mmx304.8 mmx12.7 mm ALUMINUM PLATE IN A 40 DEG.C AMBIENT

SPEED/ TORQUE CURVE SHOWN IS RATED. TYPICAL VALUES ARE WITH IN +/- 10% OF RATING

OTHER SPECIFICATIONS

SINUSOIDAL DRIVE

REV(Dt)	Description
A(11/11/05)	Initial Release
B(2/10/06)	Add RMS Kt and Ke
C(3/20/06)	Add # of poles
D(4/6/06)	Sine SI Ke values corrected
E(2/20/07)	Add C6 and D3 winding
F(5/07/07)	Reconfigured speed/torque

REVISIONS				
REV	ECN	DESCRIPTION	DATE	APP'D
A	DR8384	RELEASED	1/29/07	T.M.
B	ECN3230	LABEL REMOVED FROM DRG,NOTES ADDED	07/03/07	J.S.

Clockwise rotation, viewed from the motor shaft, results in these waveforms.

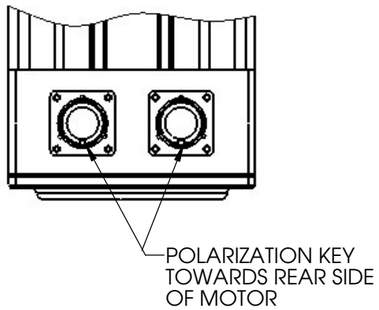

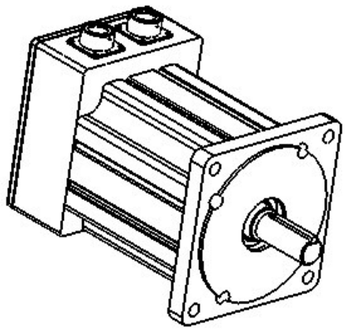

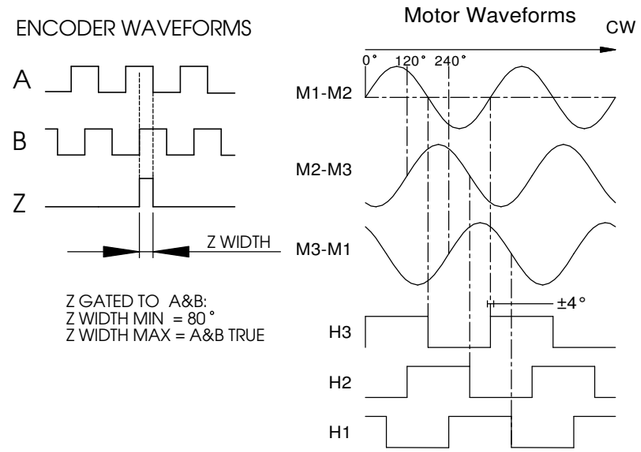

ENCODER CONN WIRING CODE	
FROM	TO PIN
OUTPUT A	A
OUTPUT A'	B
OUTPUT B	C
OUTPUT B'	D
OUTPUT Z	E
OUTPUT Z'	F
CASE GROUND	G
N/A	H
+ 5 VDC	J
+ 5 VDC	K
COMMON	L
COMMON	M
N/A	N
N/A	P
THERMOSTAT	R
THERMOSTAT	S
OUTPUT W (H1)	T
OUTPUT U (H3)	U
OUTPUT V (H2)	V

MOTOR CONN. WIRING CODE	
FROM	TO PIN
MOTOR M1	A
MOTOR M2	B
MOTOR M3	C
CASE	D

NOTE:
TEMPERATURE SENSOR:
CONTACTS: NORMALLY CLOSED
MAX AMPS: 6 AMP
RATED VOLTAGE: 24VDC

[B] **USE MOTOR CONFIGURATION FILE FROM CMC PER MOTOR MODEL NUMBER**

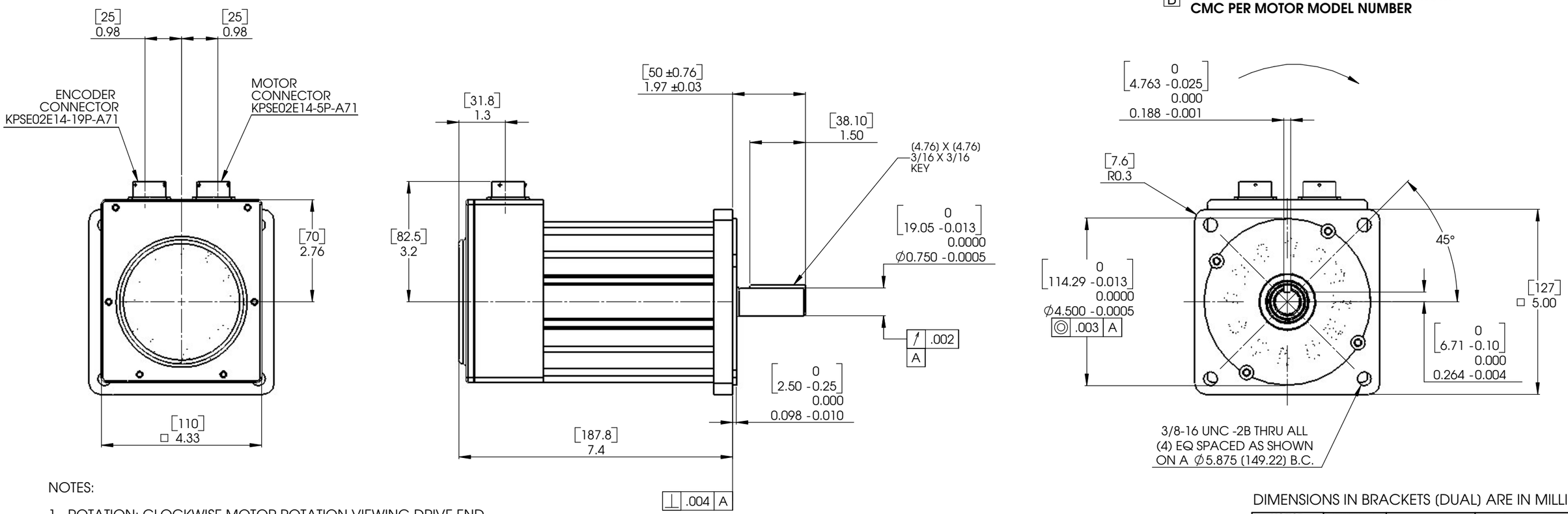

NOTES:

1. ROTATION: CLOCKWISE MOTOR ROTATION VIEWING DRIVE END OCCURS WHEN PHASE A LEADS PHASE B, PHASE B LEADS PHASE C.
2. THE INDEX PULSE OCCURS WHEN FACING THE MOTOR, THE SHAFT KEYWAY IS ORIENTED 90° ± 10° CLOCKWISE (MECHANICAL) FROM CONNECTORS.

[B] FRAME: T1102 with nema 56 flange

DIMENSIONS IN BRACKETS (DUAL) ARE IN MILLIMETERS

CAD GENERATED DRAWING, DO NOT MANUALLY UPDATE

NOTICE
Information contained herein is the sole property of Cleveland Motion Controls, Torque Systems Division. This may not be reproduced, copied or traced in any manner in part or whole without the written permission by Cleveland Motion Controls, Torque Systems Division.

THIRD ANGLE PROJECTION

Dimensions in millimeters (mm) and apply after processing. Remove burrs & sharp edges. Interpret drawing and tol. per ASME Y14.5M-1994.

MILLIMETERS (mm) TOLERANCES UNLESS OTHERWISE SPECIFIED	
X	+/- 2.5
XX	+/- 0.25
XXX	+/- 0.100
ANGLES	+/- 0°-30'
MATERIAL	N/A
FINISH	N/A

APPLICATION	
NEXT ASSY	USED ON
	110mm
DRAWN M.MEZHER 1/29/07	
CHECKED	
APPROVED	

Cleveland Motion Controls
An Company Torque Systems Division

TITLE
OUTLINE N-5637, N-5647
ELECTROCRAFT REPLACEMENT

SIZE D | DWG. NO. 32030-052 | REV. B

SCALE 1:1 | SHEET 1 OF 1

CAD FILE: 32030-052.SLDDRW

ENTER DRIVE LETTER BELOW(S for Sine, T for Trap)

s

ENTER BUS VOLT BELOW(Vdc)

325

ENTER UNIT LETTER BELOW(M for SI, E for English)

m

SELECT WINDING FROM DROP DOWN LIST

Ke = E0(Ke = 60 Vpk/krpm)

MODE NUMBER

CHECKED:	SD	T1102 E0(Ke = 60 Vpk/krpm)	DRAWN: AR
all values at 25 deg c unless stated otherwise		STD / CUST	APPROVED:
TORQUE & CURRENT AT 40 Deg C AMBIENT		YES	SD

^SPECIFICATIONS

Symbol		Units	NOM	MIN	MAX
Tpk	Torque,peak stall	Nm			21.9
Tc	Torque,continuous stall	Nm	8.29	7.46	9.12
Ktp	Torque sensitivity (L TO L)	Nm/Apeak	0.496	0.446	0.546
Kt	Torque sensitivity (L TO L)	Nm/Arms	0.702	0.632	0.772
Ra	Armature resistance (L TO L)	ohms	0.58	0.49	0.67
La	Armature inductance (L TO L)	millihenry	3.6	2.52	4.68
Ip	Amps at Tpk	Apeak	44.2	39.8	48.6
Isp	Amps at Tc stall	Apeak	19.66	17.69	21.63
Is	Amps at Tc stall	Arms	13.90	12.51	15.29
Kep	Back EMF constant	Vpeak/Krpm	**60.00**	54.00	66.00
Ke	Back EMF constant	Vrms/Krpm	42.43	38.19	46.67
Kep	Back EMF constant	Vpeak/rad/sec	0.573	0.446	0.546
Ke	Back EMF constant	Vrms/rad/sec	0.405	0.365	0.446
Ep	Volts @ Tpk	Vpeak	25.64		
Fi	Viscous friction	Nm/Krpm	0.350		
Tf	Static friction torque	Nm	0.500		
Ec	volts @ Tc	Vpeak	17.104		
Jm	Moment of inertia	Kg-cm2	4.29379		
Tm	Time constant,mech	milliseconds	0.76		
Te	Time constant,elect	milliseconds	6.21		
Rth	Thermal resistance	deg C/watt	0.45		
Tth	Time constant,thermal	minutes	28		
Oa	Max armature temp	deg C			155
Km	Figure of Merit	Nm/(amp-ohm)	0.65		
Nls	Max operating speed	rpmmax			5237
	# of motor poles		8		
Wt	weight	Kg	6.7		

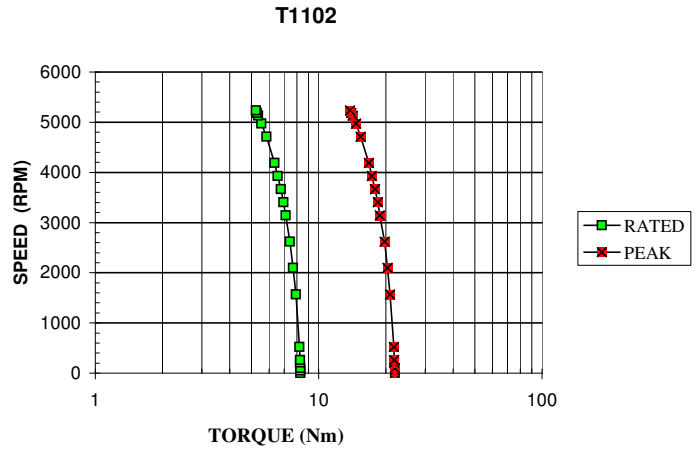

MOTOR IS MOUNTED ON A 304.8 mmx304.8 mmx12.7 mm ALUMINUM PLATE IN A 40 DEG.C AMBIENT

SPEED/ TORQUE CURVE SHOWN IS RATED. TYPICAL VALUES ARE WITH IN +/- 10% OF RATING

OTHER SPECIFICATIONS

SINUSOIDAL DRIVE

RPM	Trated Nm	Peak Voltage	Peak Current	RMS Current	Watts
0	8.290	17.1	19.66	13.90	252
262	8.249	32.7	19.56	13.83	516
524	8.199	48.4	19.44	13.75	776
1047	8.071	79.5	19.14	13.53	1280
1571	7.902	110.6	18.74	13.25	1759
2095	7.691	141.6	18.24	12.90	2203
2619	7.434	172.5	17.63	12.47	2603
3142	7.128	203.2	16.90	11.95	2945
3666	6.766	233.9	16.04	11.34	3223
4190	6.338	264.5	15.03	10.63	3420
4713	5.834	294.8	13.83	9.78	3512
5237	5.231	325.0	12.40	8.77	3475

Rated Speed	Rated Torque
4713	5.8
Rated watts	2884

REV(Dt)	Description
A(11/11/05)	Initial Release
B(2/10/06)	Add RMS Kt and Ke
C(3/20/06)	Add # of poles
D(4/6/06)	Sine SI Ke values corrected
E(2/20/07)	Add G3 winding
F(5/07/07)	Reconfigured speed/torque

ENTER DRIVE LETTER BELOW(S for Sine, T for Trap)

s

ENTER BUS VOLT BELOW(Vdc)

325

ENTER UNIT LETTER BELOW(M for SI, E for English)

m

SELECT WINDING FROM DROP DOWN LIST

Ke = G3(Ke = 77 Vpk/krpm)

MODE NUMBER

CHECKED:	SD	T1102 G3(Ke = 77 Vpk/krpm)	DRAWN: AR
all values at 25 deg c unless stated otherwise		STD / CUST	APPROVED:
TORQUE & CURRENT AT 40 Deg C AMBIENT		YES	SD

^SPECIFICATIONS

Symbol		Units	NOM	MIN	MAX
Tpk	Torque,peak stall	Nm			21.9
Tc	Torque,continuous stall	Nm	8.39	7.55	9.23
Ktp	Torque sensitivity (L TO L)	Nm/Apeak	0.637	0.573	0.701
Kt	Torque sensitivity (L TO L)	Nm/Arms	0.900	0.810	0.990
Ra	Armature resistance (L TO L)	ohms	.932	0.79	1.07
La	Armature inductance (L TO L)	millihenry	5.9	4.13	7.67
Ip	Amps at Tpk	Apeak	34.4	31.0	37.8
Isp	Amps at Tc stall	Apeak	15.51	13.96	17.06
Is	Amps at Tc stall	Arms	10.97	9.87	12.07
Kep	Back EMF constant	Vpeak/Krpm	**77.00**	69.30	84.70
Ke	Back EMF constant	Vrms/Krpm	54.46	49.01	59.91
Kep	Back EMF constant	Vpeak/rad/sec	0.735	0.573	0.701
Ke	Back EMF constant	Vrms/rad/sec	0.520	0.468	0.572
Ep	Volts @ Tpk	Vpeak	32.06		
Fi	Viscous friction	Nm/Krpm	0.350		
Tf	Static friction torque	Nm	0.500		
Ec	volts @ Tc	Vpeak	21.683		
Jm	Moment of inertia	Kg-cm2	4.29379		
Tm	Time constant,mech	milliseconds	0.74		
Te	Time constant,elect	milliseconds	6.33		
Rth	Thermal resistance	deg C/watt	0.45		
Tth	Time constant,thermal	minutes	28		
Oa	Max armature temp	deg C			155
Km	Figure of Merit	Nm/(amp-ohm)	0.66		
Nls	Max operating speed	rpmmax			4000
	# of motor poles		8		
Wt	weight	Kg	6.7		

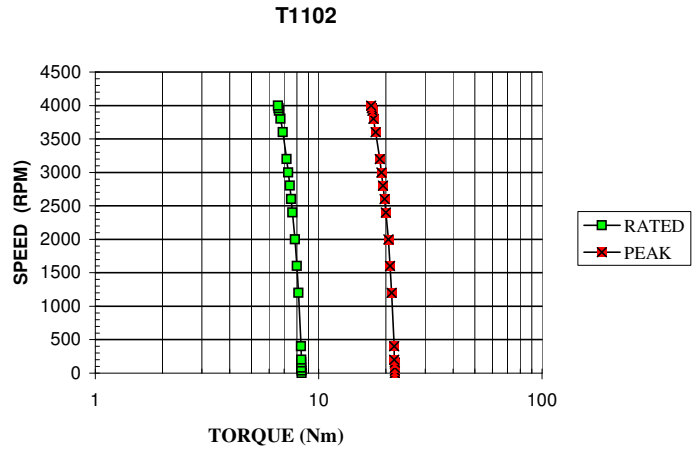

MOTOR IS MOUNTED ON A 304.8 mmx304.8 mmx12.7 mm ALUMINUM PLATE IN A 40 DEG.C AMBIENT

SPEED/ TORQUE CURVE SHOWN IS RATED. TYPICAL VALUES ARE WITH IN +/- 10% OF RATING

OTHER SPECIFICATIONS

SINUSOIDAL DRIVE

RPM	Trated Nm	Peak Voltage	Peak Current	RMS Current	Watts
0	8.393	21.7	15.51	10.97	252
200	8.363	37.0	15.45	10.92	456
400	8.327	52.3	15.39	10.88	659
800	8.238	82.9	15.22	10.76	1055
1200	8.126	113.4	15.01	10.61	1437
1600	7.991	143.8	14.76	10.44	1804
2000	7.830	174.2	14.47	10.23	2149
2400	7.642	204.5	14.12	9.98	2468
2800	7.427	234.8	13.72	9.70	2759
3200	7.181	265.0	13.27	9.38	3015
3600	6.901	295.0	12.75	9.02	3233
4000	6.585	325.0	12.17	8.61	3403

Rated Speed	Rated Torque
4000	6.6
Rated watts	2763

REV(Dt)	Description
A(11/11/05)	Initial Release
B(2/10/06)	Add RMS Kt and Ke
C(3/20/06)	Add # of poles
D(4/6/06)	Sine SI Ke values corrected
E(2/20/07)	Add G3 winding
F(5/07/07)	Reconfigured speed/torque