REVISIONS				
REV	ECN	DESCRIPTION	DATE	APP'D
A	DR8374	RELEASED	1/25/07	T.M.
B	ECN3064	ENCODER WAVEFORM BLOCK REPLACED	02/15/07	J.S.
C	ECN3230	MOTOR CONFIG. & NEMA NOTE ADDED	07/03/07	J.S.

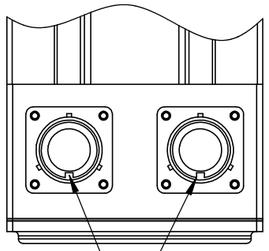

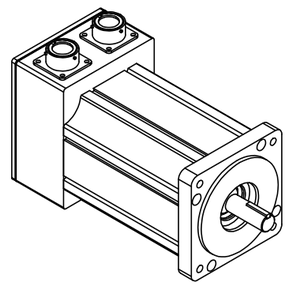

Clockwise rotation, viewed from the motor shaft, results in these waveforms.

ENCODER WAVEFORMS

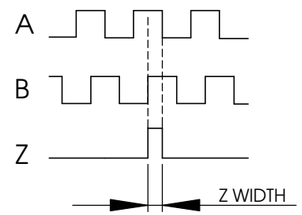

Z GATED TO A&B:
Z WIDTH MIN = 80°
Z WIDTH MAX = A&B TRUE

Motor Waveforms

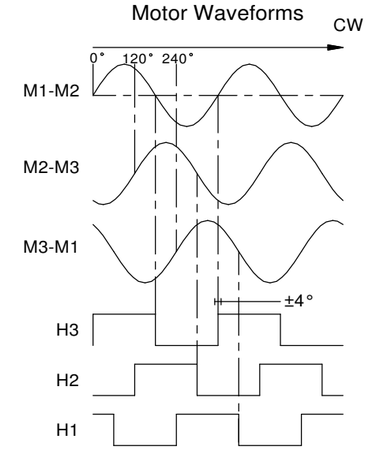

ENCODER CONN WIRING CODE	
FROM	TO PIN
OUTPUT A	A
OUTPUT A'	B
OUTPUT B	C
OUTPUT B'	D
OUTPUT Z	E
OUTPUT Z'	F
CASE GROUND	G
N/C	H
+ 5 VDC	J
+ 5 VDC	K
COMMON	L
COMMON	M
N/C	N
N/C	P
THERMOSTAT	R
THERMOSTAT	S
OUTPUT H1	T
OUTPUT H3	U
OUTPUT H2	V

MOTOR CONN. WIRING CODE	
FROM	TO PIN
MOTOR M1	A
MOTOR M2	B
MOTOR M3	C
CASE	D

NOTE:
TEMPERATURE SENSOR:
CONTACTS: NORMALLY CLOSED
MAX AMPS: 6 AMP
RATED VOLTAGE: 24VDC

C **USE MOTOR CONFIGURATION FILE FROM CMC PER MOTOR MODEL NUMBER**

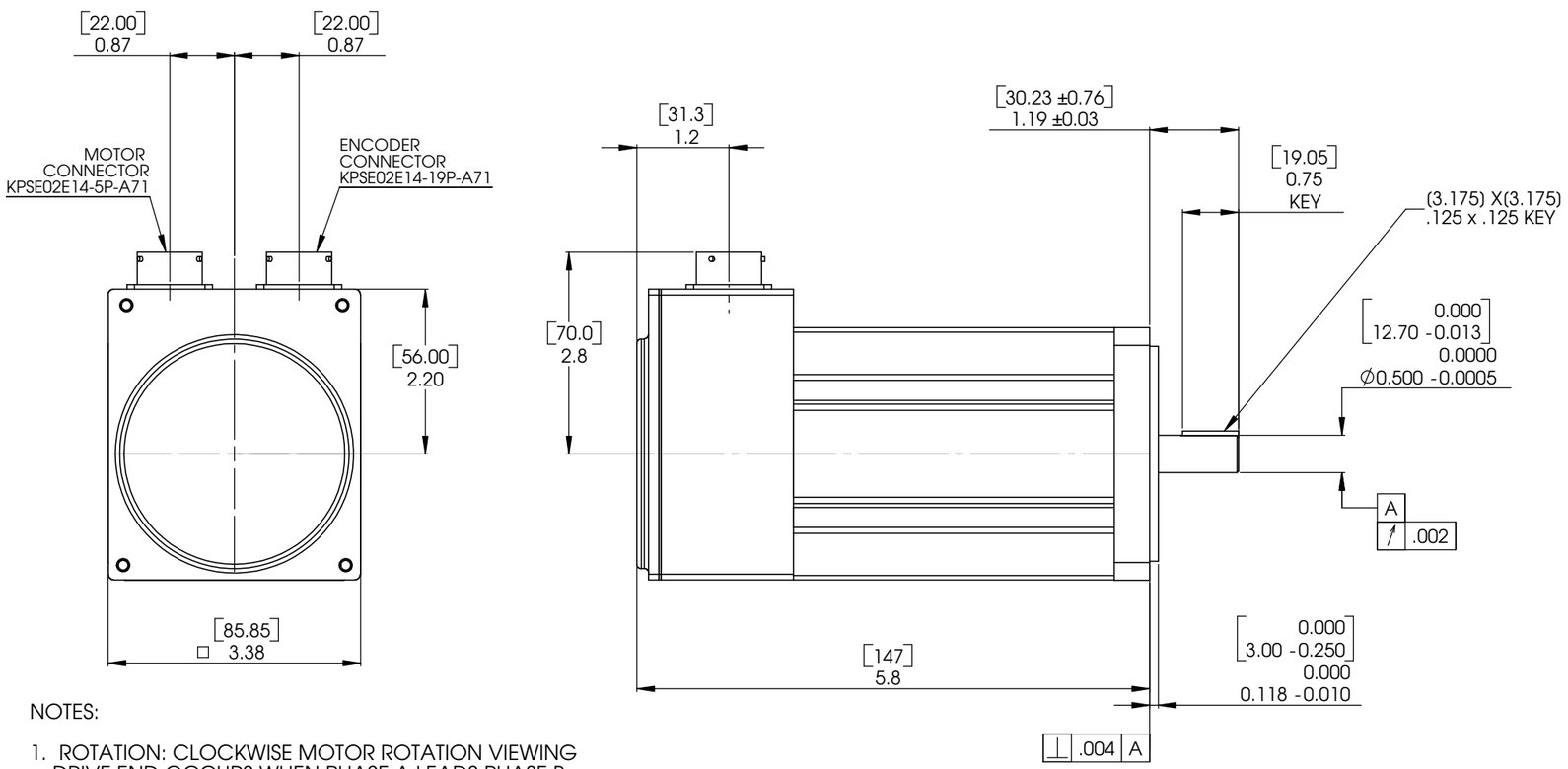

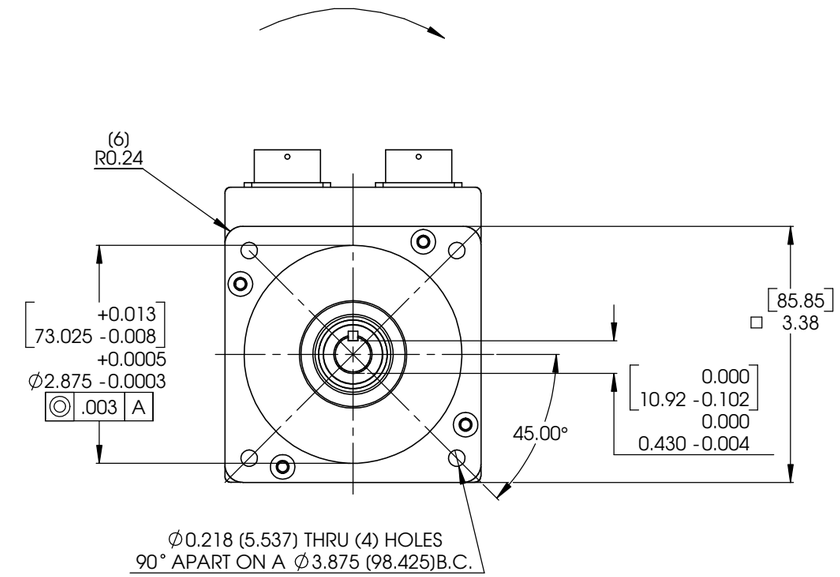

NOTES:

1. ROTATION: CLOCKWISE MOTOR ROTATION VIEWING DRIVE END OCCURS WHEN PHASE A LEADS PHASE B, PHASE B LEADS PHASE C.

2. THE INDEX PULSE OCCURS WHEN FACING THE MOTOR, THE SHAFT KEYWAY IS ORIENTED 90°±10° CLOCLWISE (MECHANICAL) AWAY FROM THE CONNECTORS

C **FRAME: T0851 WITH NEMA 34 FLANGE**

DIMENSIONS IN BRACKETS (DUAL) ARE IN MILLIMETERS

CAD GENERATED DRAWING, DO NOT MANUALLY UPDATE

NOTICE
Information contained herein is the sole property of Cleveland Motion Controls, Torque Systems Division. This may not be reproduced, copied or traced in any manner in part or whole without the written permission by Cleveland Motion Controls, Torque Systems Division.

THIRD ANGLE PROJECTION

Dimensions in millimeters (mm) and apply after processing. Remove Burrs & Sharp Edges. Interpret dim. and tol. per ASME Y14.5M-1994.

MILLIMETERS (mm) TOLERANCES UNLESS OTHERWISE SPECIFIED

X	+/- 2.5
XX	+/- 0.25
XXX	+/- 0.100
ANGLES	+/- 0°-30'

MATERIAL: N/A
FINISH: N/A

APPLICATION	
NEXT ASSY	USED ON: 85mm
DRAWN: T. MEZHER 1/25/07	
CHECKED	
APPROVED	

Cleveland Motion Controls
An EMC Company Torque Systems Division

TITLE: OUTLINE N-3406, N-3412 ELECTROCRAFT REPLACEMENT

SIZE D | DWG. NO. 31030-078 | REV. C

SCALE 1:1 | SHEET 1 OF 1

CAD FILE: 31030-078.SLDDRW