Copyright reserved | Drepturile de reproducere rezervate | Tous droits de reproduction reserves | Alle rechte vorbehalten

# CAGE ROTOR INDUCTION MOTOR

## 1600kW, 600rpm, D6000V, IC 01, IPW 24

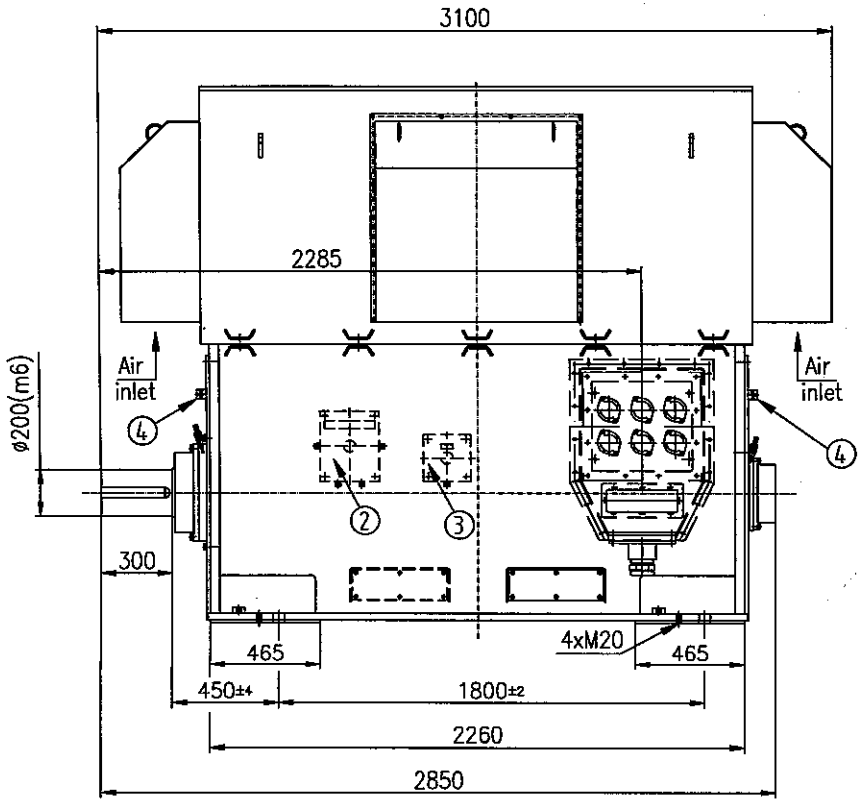


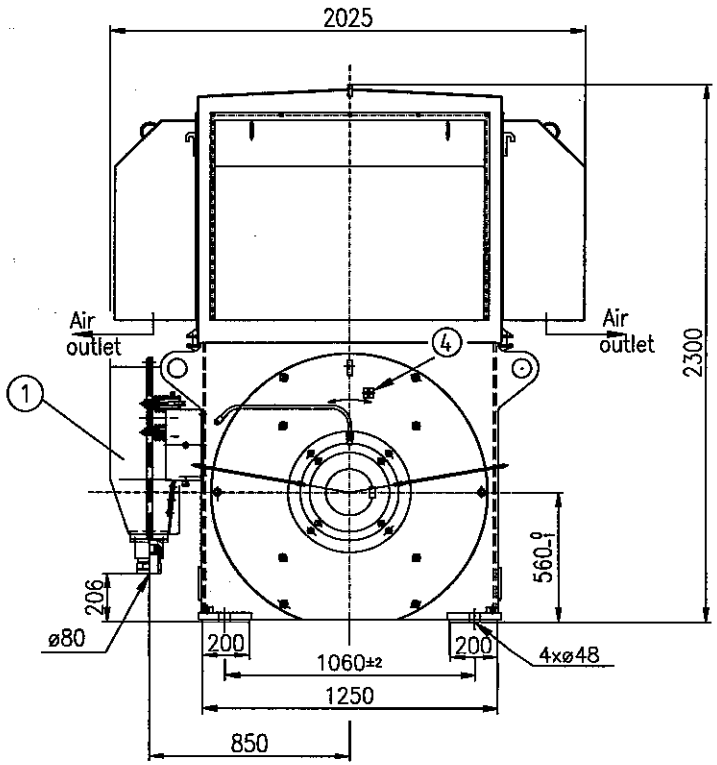


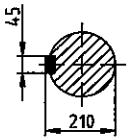


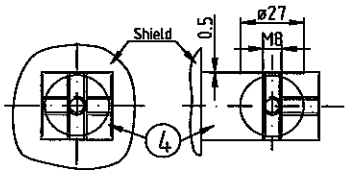


① –Main terminal box
② –Winding and bearing RTD's PT 100
③ –Space heaters:2x500W,220V,a.c.
④ –SPM nipple

**CENTRO ROTTAMI s.r.l.**
Via Grotte di Nottola n. 16
04012 CISTERNA DI LATINA (LT)
Cod. Fisc. e P. IVA 01239480597

| | | | | | |
|---|---|---|---|---|---|
| Revision | 0 | | | | |
| Date | 2018.05.31 | | | | |
| Approved | D.G. J.V. J.V. | | | | |

**comelmar motors** | OUTLINE DRAWING | AG56–19 | 1/1 | FT25423

A-CAD | A3–420x297