PHASE
MOTION CONTROL

U3 ServoMotors

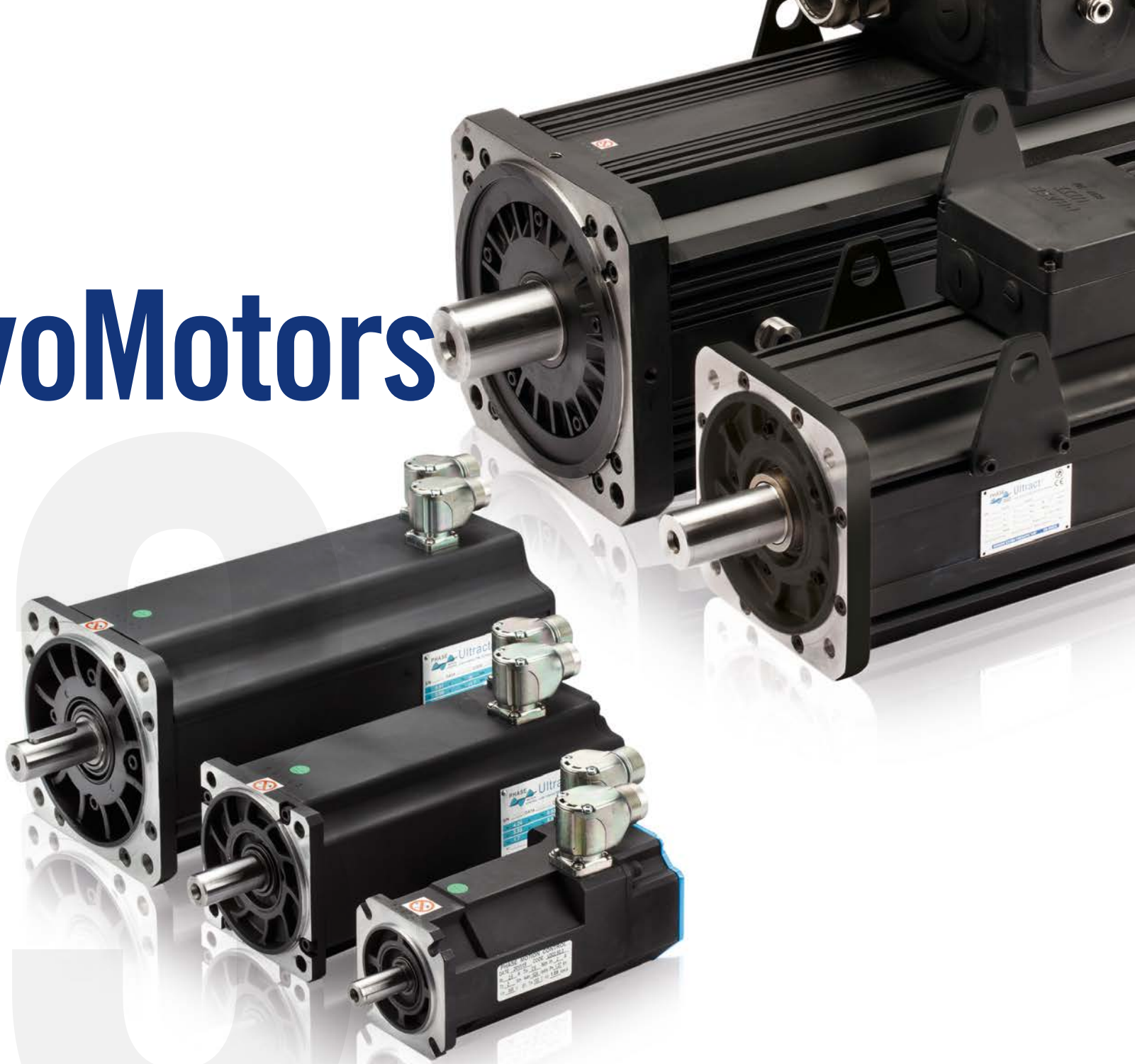

Supported Models

U303N

U305N
U305W

U307N
U307F
U307W

U310N
U310F
U310W

U313N
U313F
U313W

U318N
U318F
U318W

Available at www.phase.eu

U3 ServoMotor Series

LEADING THE INNOVATION IN HIGH DYNAMIC AND TORQUE AND POSITION CONTROL FOR AUTOMATION

U3 Servomotors are available in a wide size range with 6 flange sizes and continuous torque from 3 Nm to 1500 Nm. All sizes (except the smallest size 3) are available in Air Cooled, Fan Cooled and Water Cooled version.

U3 Servomotors are designed for highly dynamic control systems. Consequently, motors are designed with minimal inertia rotor to allow fastest dynamic response. Additional inertia an extra flywheel can be introduced in the same brake cavity (as an alternative to brake) to compensate for poor mechanical linkages between the motor and the load.

The standard shaft is for the same reason round and ready for clamping with conical hubs (recommended to avoid backlash). If a key is required (and the corresponding reduced servo performance is accepted) it can be supplied as an option. All shafts are balanced so that simple rotating parts (e.g. pulleys, gears) need not to be balanced.

All motors can be equipped with a PM safety brake. The brakes are all rare earth permanent magnet type. This new high power density brake operates without brake pads. As a consequence, the problem of pollution of the motor cavity when the brake is operated incorrectly is avoided.

Single piece extruded frame, smooth, with O-rings on all couplings and IP65 protection (IP54 for fan cooled versions) to allow flushing and sterilization in food and chemical applications. Standard lip seal on shaft accessible from outside for maintenance/replacement.

Standard circular connectors, rotatable 270 degrees, up to 60 Arms. Connection box for higher current ratings. Standard high flexibility cables available.

Standard position feedback sensor: Heidenhain absolute magnetic encoders, single or multi turn (4096 turns), accuracy 280”, resolution 19 bit/turn, ENDAT full digital serial interface. The motor can also be equipped with sinusoidal optical encoders (Heidenhain ERN 1385, accuracy 20”, interpolated resolution 24 bit/rev, or resolver (accuracy 10’) for low cost, low performance applications.

KTY84-130 or PT1000 linear thermal sensor for continuous motor temperature sensing.

Flange and shaft manufactured to Grade R (reduced tolerance IEC 72).

U3 Servomotors

Brushless PM AC servomotors, low inertia, high angular stiffness.

The U3 Motor Series of high performance servo motors, produced in the new Phase Motion Control plant specialized in high performance servo motors, is based on the last generation of rare earth magnets and embodies the patented Phase surface magnet assembly technology, which endows the motors with the highest torque density and the lowest rotor inertia.

Type

Brushless PM AC servomotors, low inertia, high angular stiffness.

Rotor

Sintered, high temperature rare earth, mechanically fastened magnets (without bonding).

Insulation

Motor: Class F according to DIN 0530.
Winding: Class H according to DIN 0530, special high frequency winding suitable for long wiring with high frequency PWM waveforms.

Thermal protection

PTC 130 and KTY 84-130 or PT 1000 (to be specified in ordering code).

Concentricity and squareness of mounting flange

Grade R (reduced tolerance) according to IEC 72-DIN 0530.

Bearings

Heavy duty, life lubricated; Sizes 3 and 5; Sizes 7, 10, 13 and 18: front bearing locked in high strenght cast iron seat.

Balancing

G 6,3 (G 2,5 only on customer request).

Cooling options

Models	Natural	Fan	Water
U303	✓		
U305	✓		✓
U307	✓	✓	✓
U310	✓	✓	✓
U313	✓	✓	✓
U318	✓	✓	✓

Working position

Any.

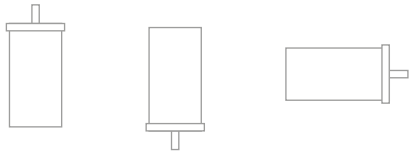

Sensors

N08	EQI 1331 ENDAT 01
R09	TS2640N101E64 RESOLVER 2 POLES
Z00	No sensor
C00	ECN 1313 2048
S00	ERN 1385 2048
U00	EQN 1325 2048 Endat 2.2
U01	EQN 1337 2048
M06	ECI 1319 ENDAT 01
N07	EQI 1331 Endat 21
C01	ECN1325 2048
Q01	EQN 1325 2048 Endat 2.1
M07	ECI 1319 ENDAT 22

Shaft

Cylindrical without keyway, tolerance j6, for interference mounting with shrink rings; axial threaded hole.

Stray capacitance to ground

Minimized EMC impact.

Protection

IP 65 (IP 54 only for Fan).

Motor Connections: Signal

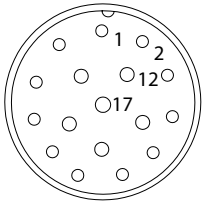

Signal Connector M23 - 17 PIN
SinCos Encoder Type Sx*500

PIN	Name	Function	Ax Drive E1 Connector*
1	A+	Encoder incremental channel	7
2	A-	Encoder incremental channel	12
3	I+ (index)	Encoder index	14
4	Sin -, 1 c/r	Encoder absolute channel	5
5	Cos +, 1 c/r	Encoder absolute channel	3
6	Cos -, 1 c/r	Encoder absolute channel	4
7	GND	Supply ground	1
8	PTC +	Thermal sensor	nc
9	PTC - / KTY -	Thermal sensor negative	nc
10	+ Vcc (5Vdc)	Encoder Supply, 5 Vdc	6
11	B +	Encoder incremental channel	15
12	B -	Encoder incremental channel	13
13	I - (index -)	Encoder index	9
14	Sin +, 1 c/r	Encoder absolute channel	2
15	GND sense	-	n.c.
16	+ Vcc sense	-	n.c.
17	KTY +	Thermal sensor positive	8

Signal Connector M23 - 17 PIN
EnDat

PIN	Name	Function	Ax Drive E1 Connector*
1	A+		-
2	A-		-
3	DATA +	Endat data	14
4	PTC +		-
5	CLOCK +	Endat clock	3
6	n.c.		-
7	GND	Supply ground	1
8	KTY84 +	Thermal sensor positive	8
9	KTY84 -		-
10	+ Vcc	Encoder supply, 8 Vdc	6
11	B+		-
12	B-		-
13	DATA -	Endat data	9
14	CLOCK -	Endat clock	4
15	GND sense		-
16	Vac sense		-
17	PTC -		-

Signal Connector M23 - 17 PIN
Resolver Type R09

PIN	Name	Function	Ax Drive E1 Connector*
1	n.c.		n.c.
2	n.c.		n.c.
3	n.c.		n.c.
4	Sin -, 1 c/r		5
5	Cos + , 1 c/r		3
6	Cos -, 1 c/r		4
7	Resex +		10
8	KTY84 +		8
9	KTY84 -		-
10	Resex -		11
11	n.c.		n.c.
12	n.c.		n.c.
13	n.c.		n.c.
14	Sin +, 1 c/r		2
15	n.c.		n.c.
16	PTC+		n.c.
17	PTC-		n.c.

Motor Connections: Power (Size 3, 5, 7N and 7W)

Wiring

1) Use shielded cable only, with shield coverage > 85%
2) Power cables longer than 20 meters may generate overvoltages on the motors and damage to the drives. Insert series inductance > 1mH

Encoder

Phasing performed at factory, no further phasing is necessary if the motor is coupled to Phase Motion Control drives.

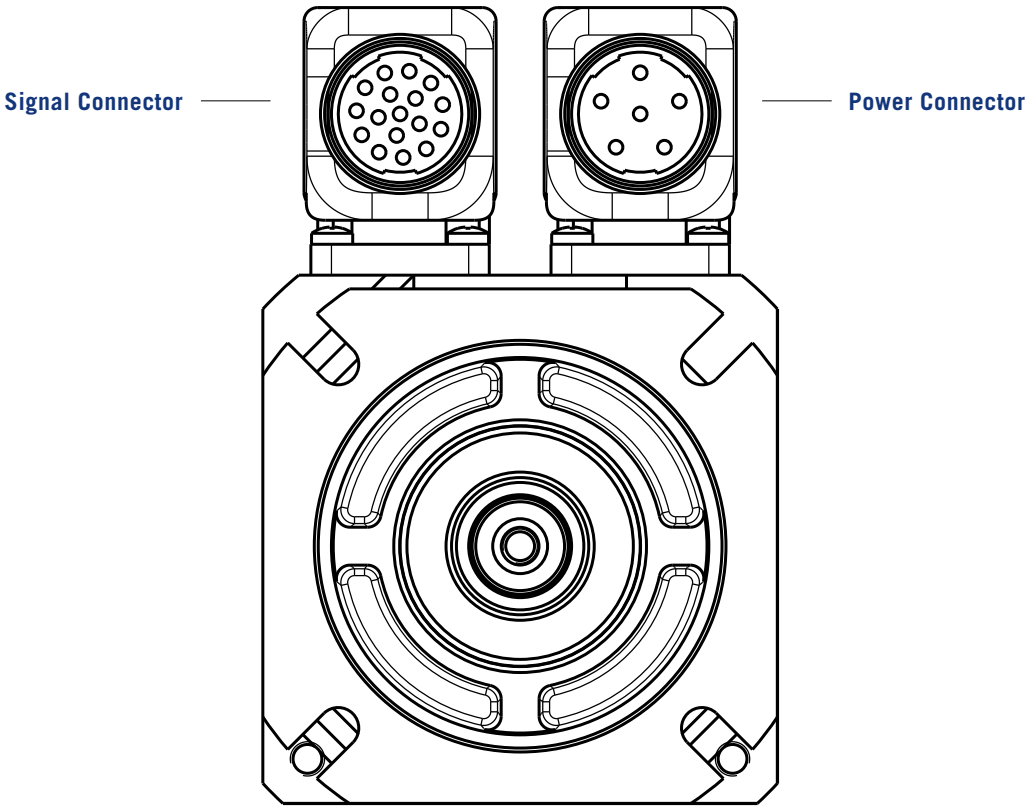

Power Connector
M23 Size 1- 5+ PE

PIN	Description
1	Phase A
2	Phase B
3	GND
4	BR + (Option)
5	BR – (Option)
6	Phase C

For motors with Inom ≤ 30 Arms

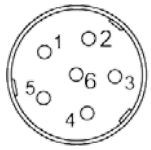

Power Connector
M40 Size 1,5-2+3+PE

PIN	Description
U	Phase A
V	Phase B
W	Phase C
+	BR + (Option)
–	BR – (Option)

For motors with Inom > 30 Arms

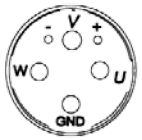

Motor Connections: Power (Size 7F,10, 13, 18)

Connection box configuration

1	Phase W
2	Phase V
3	Phase U
4	GND
5	Brake (+ 24V) *
6	Brake (0V) *
7	Fan *
8	Fan *
9	Reserved for internal use
10	Reserved for internal use
11	Reserved for internal use

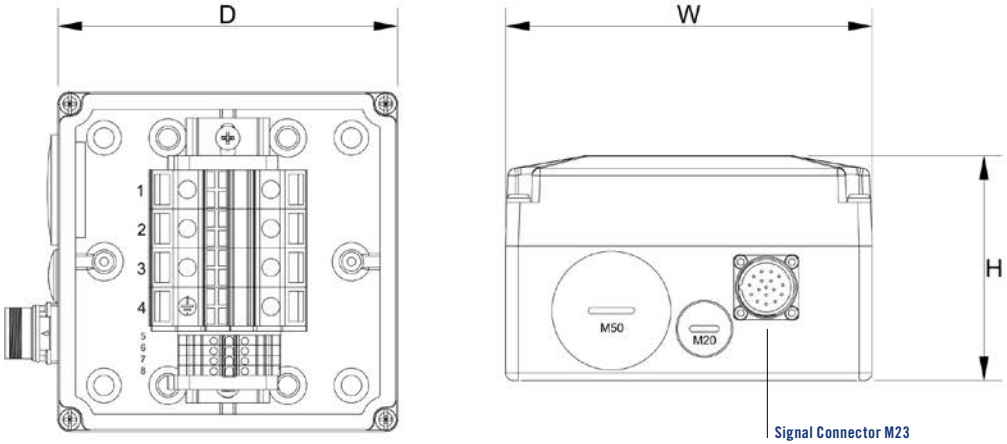

Box Connection Type A
142 x 142 x 87

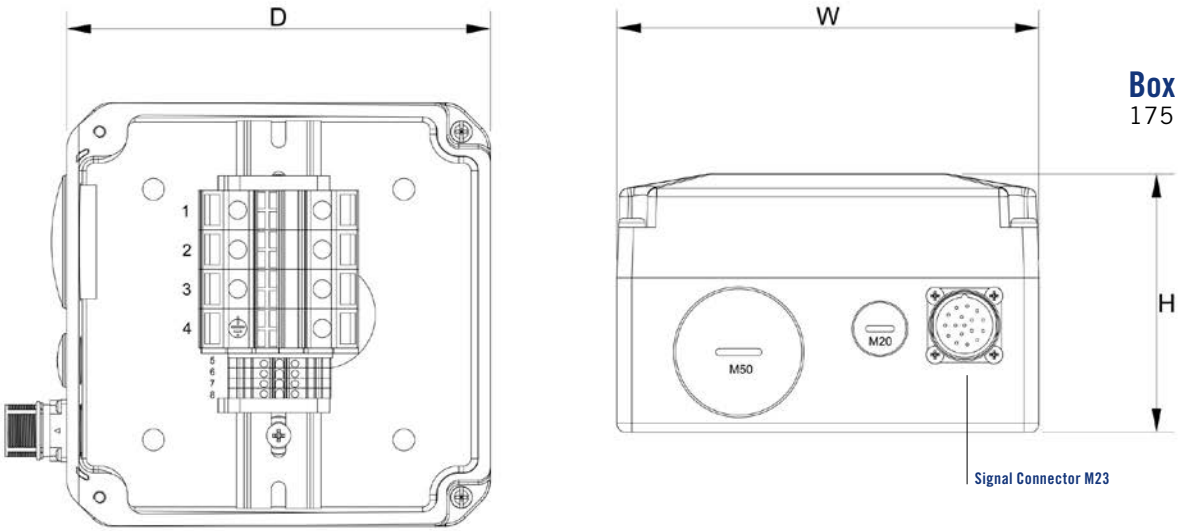

Box Connection Type B
175 x 175 x 106

(*) If present!

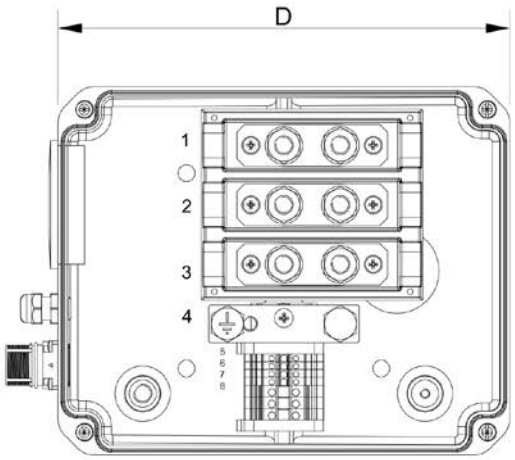

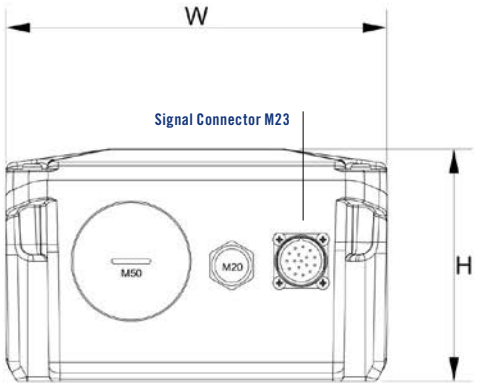

Box Connection Type C
185 x 240 x 122

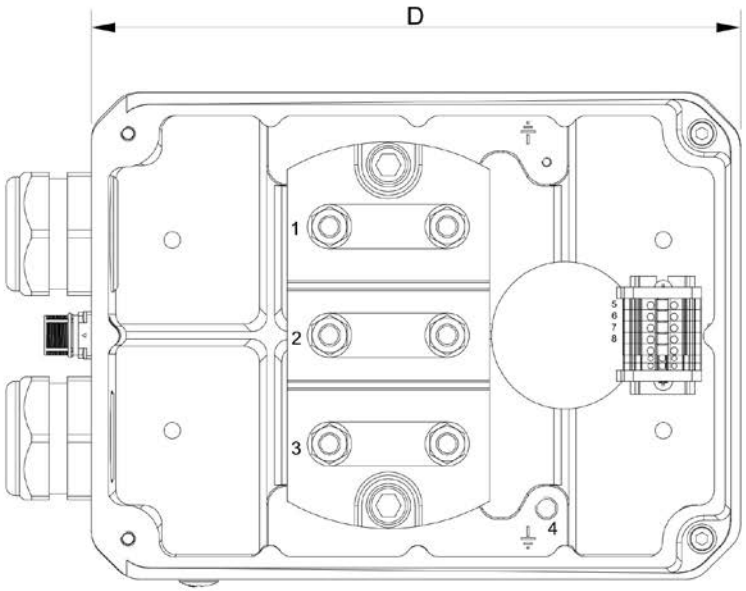

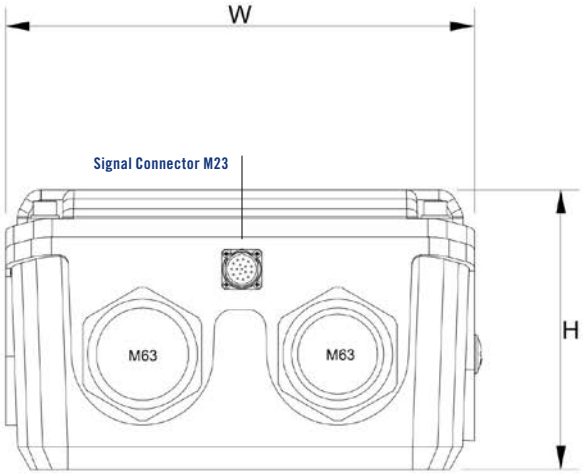

Box Connection Type D
250 x 340 x 158

Motors Performance Curves

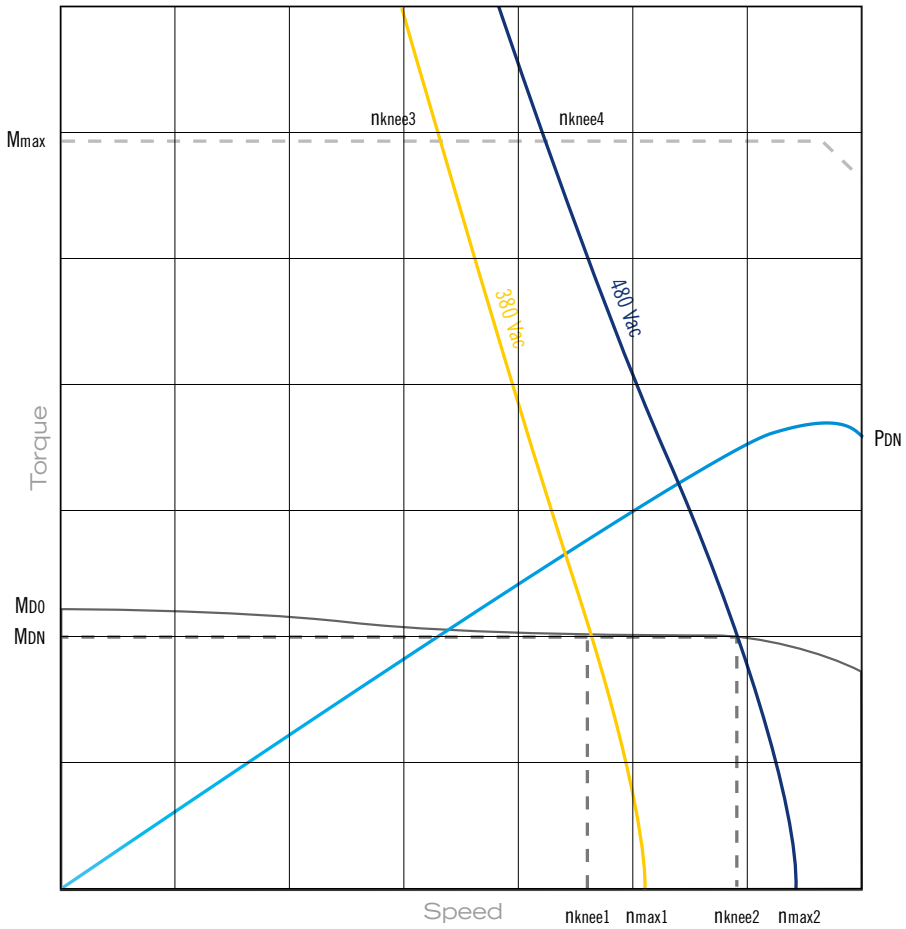

S1 Torque
Voltage Saturation 380Vac
Voltage Saturation 480Vac
Max Torque
S1 Power

Overload Rating

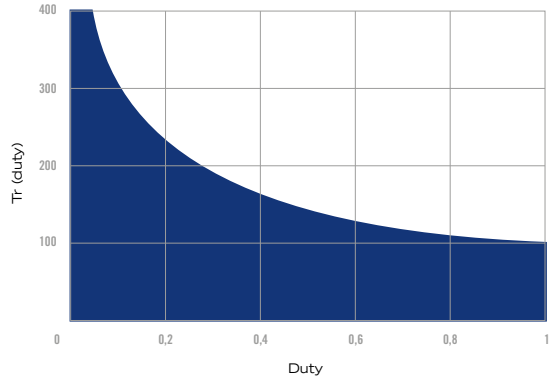

Permissible torque overload vs. duty cycle, all motors.

Thermal Derating

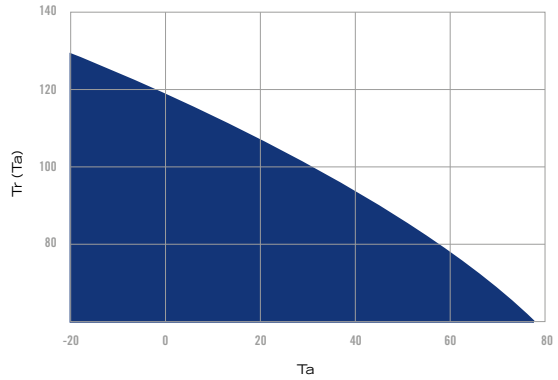

Permissible torque vs. ambient temperature, % of MdO

U303 Models

Supported Models

U303N

U303N Models

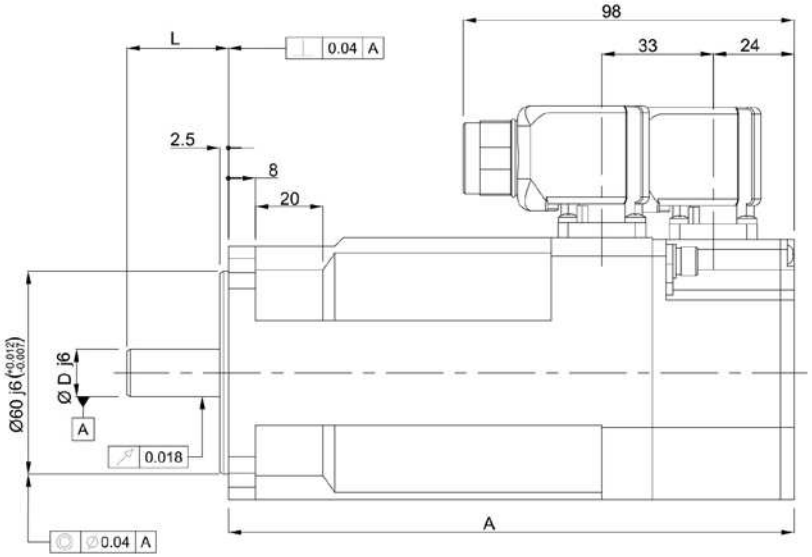

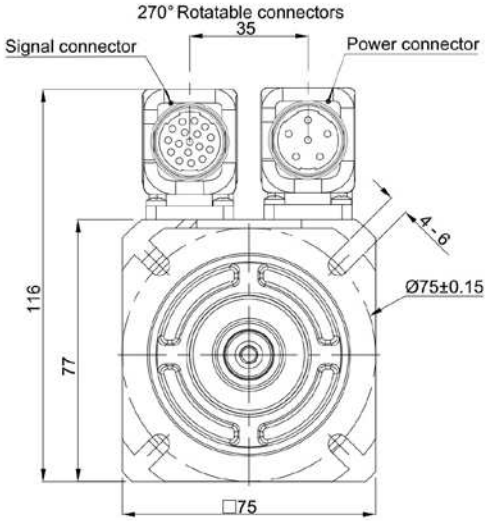

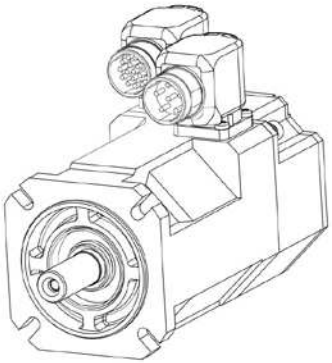

Max. Radial Load
applicable in the middle of the shaft extension

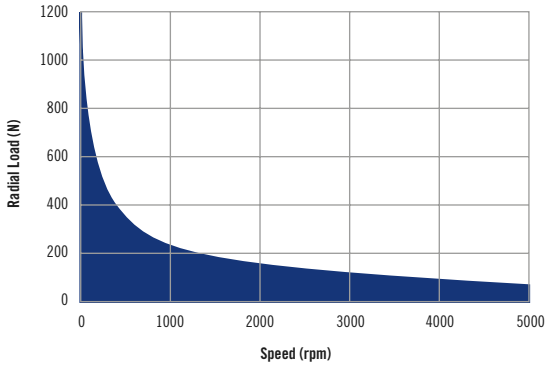

DIMENSIONS

			Shaft Dimensions	
MOTOR TYPE	**A (1)**	**A(1) (with brake or inertia)**	**∅ D*L (2)**	**∅ D*L with key**
U303N02	168	198	14*30	14*30
U303N04	222	252	14*30	14*30

1) Be carefully, with encoder: EQN1337; ECN1325 the total length is an additional 5mm.
2) Shaft dimension according to DIN 748-1 column (b): simultaneous transmission of torque and a known bending moment.

Natural Convection Cooling - For inverter rated Voltage 380Vac to 480Vac

Motor Type			02	04
Rated Speed	nM	[rpm]	5000	5000
Stall Torque 1)	Md0	[Nm]	2,15	3,7
Current @ Stall Torque 1)	Id0	[A]	1,9	3,27
Number of Poles	2p		8	
Nominal Rating				
Rated Torque 1)	MdN	[Nm]	1,57	2,1
Rated Current 1)	IdN	[A]	1,26	2,09
Rated Power	PdN	[kW]	0,82	1,10
Voltage Constant (+/- 10%)	Ke20°C	[Vrms/1000rpm]	73,22	73,22
Torque Constant (+/- 10%)	Kt20°C	[Nm/A]	1,21	1,21
Winding Resistance (+/- 10%)	Ru-v	[Ω]	9,5	3,67
Winding Inductance (+/- 10%)	Lu-v	[mH]	17,49	8,75
Derating Temp. Coeff. Of Back EMF	Dke/Dt	[%/°C]	-0,11	
Nominal Voltage	Vn	[V]	362	357
Losses	Loss	[kW]	0,830	0,940
Minimum Flow Rate	Flow	[L/min]	n.a.	
Efficiency	Eff	[%]	0,890	0,930
Knee Speed @ 380Vac	nknee1	[rpm]	5264	5336
Knee Speed @ 480Vac	nknee2	[rpm]	6813	6879
Knee Speed 380Vac and Mmax	nknee3	[rpm]	2958	3210
Knee Speed 480Vac and Mmax	nknee4	[rpm]	4314	4272
Maximum Values				
Max. Torque	Mmax	[Nm]	10	20
Max. Current (peak value)	Imax	[A]	10,3	20,6
Max. Saturation Speed @ 380Vac	nmax1	[rpm]	5520	5520
Max. Saturation Speed @ 480Vac	nmax2	[rpm]	6960	6960
Max. Mechanical Speed	nmax	[rpm]	6000	
Mechanical Data (+/- 10%)				
Inertia	Jm	[kgcm²]	0,89	1,7
Mass	M	[kg]	3,2	4
Technical Data of the holding brake				
Holding Torque	MBr	[Nm]	3,8	
Rated Voltage (±10%)	UBr	[Vdc]	24	
Rated Current 1)	IBr	[A]	0,54	
Mass	MBr	[kg]	0,55	
Inertia	JBr	[kgcm²]	0,42	
Additional motor length	Length	[mm]	30	

Test Condition
1) Motor flanged on heatsink 300x300x20; Chopper frequency 8kHz

U303 Ordering Code

Example Code

U3 03 N 02 50 3 R09 0 01 1 G1 0000000

Family Code

				Cooling		Stall Torque		Speed		Voltage	
code	description	code	description	code	description	code	description	code	description	code	description
U3	Ultract 3	03	Size 3	N	Natural cooling	02	2,15 Nm	50	5000 rpm	3	380V AC 3 phase
						04	3,7 Nm				

Option

Position Sensor		Brake		Connector		Thermal Sensor		Shaft		Label Pos		Base Plate		Motor Color		Label Pos		Package		Custom Documentation	
code	description	code	description	code	description	Code	Description	code	description	Code	Description	code	description	code	Description	code	description	code	description	code	description
Z00	No Sensor	0	No Brake	01	Std Coninvers PW & Sig	1	KTY84/PTC130	G1	14 x 30	0	STD Flange	0	NO Base Plate	0	STD Black rear cover Blu	0	STD Nameplate Right side	0	STD Package	00	STD Phasing/ Test report
R09	TS2640N101E64 Resolver 2 poles	B	Brake			2	PT1000/PTC130	K1	KEY 5x5x16 and G1Shaft												
M06	ECI 1319 EnDAT 01 EnDat 2.2	J	Inertia		ACCORDING TO MOTOR DATA																
M07	ECI 1319 EnDAT 22 EnDat 2.2																				
N07	EQI 1331 EnDAT 21 EnDat 2.2																				
N08	EQI 1331 EnDAT 01 EnDat 2.2																				
C00	ECN 1313 EnDAT 01 EnDat 2.2																				
C01	ECN1325 EnDAT 22 EnDat 2.2																				
Q01	EQN 1325 EnDAT 01 Endat 2.1																				
U00	EQN 1325 EnDAT 01 Endat 2.2																				
U01	EQN 1337 EnDAT 01 Endat 2.2																				
S00	ERN 1385																				

U305 Models

Supported Models

U305N
U305W

U305N Models

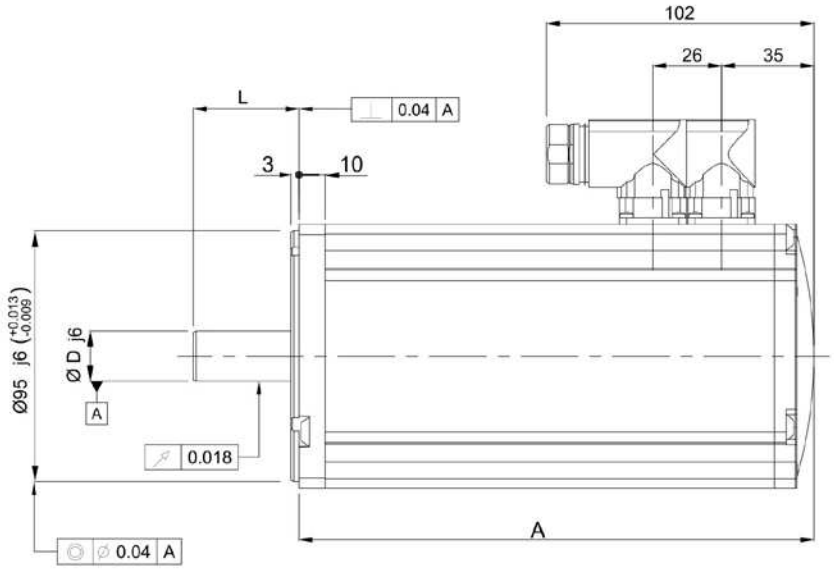

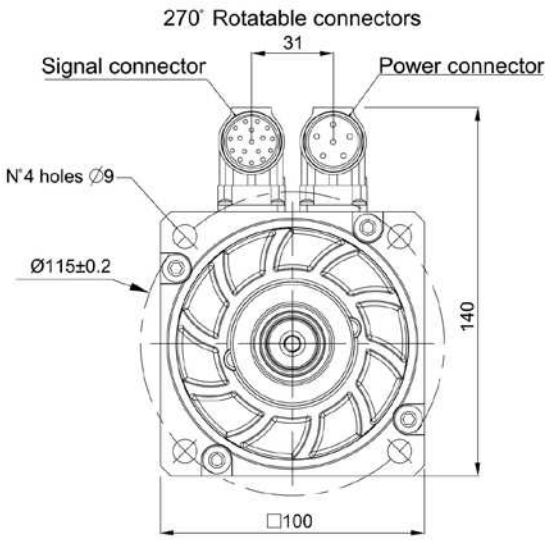

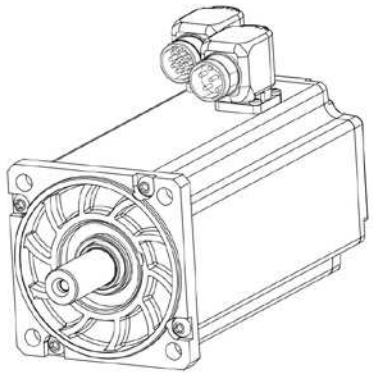

Max. Radial Load
applicable in the middle of the shaft extension

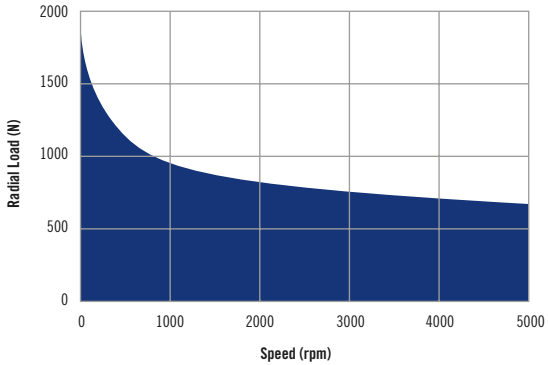

DIMENSIONS

			Shaft Dimensions	
MOTOR TYPE	**A** [1]	**A**[1] **(with brake or inertia)**	**Ø D*L** [2]	**Ø D*L with key**
U305N03	195	228	19*40	19*40
U305N06	239	272	19*40	19*40
U305N09	283	316	19*40	19*40
U305N12	327	360	19*40	24*50

1) Be carefully, with encoder: EQN1337; ECN1325 the total length is an additional 5mm.
2) Shaft dimension according to DIN 748-1 column (b): simultaneous transmission of torque and a know bending moment.

Natural Convection Cooling - For inverter rated Voltage 380Vac to 480Vac

Motor Type			03			06			09			12		
Rated Speed	nM	[rpm]	3000	4000	5000	3000	4000	5000	3000	4000	5000	3000	4000	5000
Stall Torque 1)	Md0	[Nm]	3,7			7,2			10,5			14		
Current @ Stall Torque 1)	Id0	[A]	1,9	2,6	3,2	3,8	4,9	6,45	6	7	9,2	7,9	9,9	11,9
Number of Poles	2p		8											
Nominal Rating														
Rated Torque 1)	MdN	[Nm]	3,3	3,1	2,9	6,1	5,7	5,13	8,7	8,1	6	11,7	10,1	8,6
Rated Current 1)	IdN	[A]	1,8	2,26	2,62	3,55	4,3	5,17	4,97	5,4	5,27	6,6	7,3	7,3
Rated Power	PdN	[kW]	1,05	1,33	1,53	1,95	2,41	2,69	2,74	3,5	3,16	3,68	4,36	4,54
Voltage Constant (+/- 10%)	Ke20°C	[Vrms/1000rpm]	118	90	71,26	120	93,76	71,26	112,52	95,6	73,14	113,3	90,65	75,5
Torque Constant (+/- 10%)	Kt20°C	[Nm/A]	1,954	1,49	1,18	1,99	1,55	1,18	1,86	1,58	1,21	1,87	1,50	1,25
Winding Resistance (+/- 10%)	Ru-v	[Ω]	12,73	7,39	4,6	5,15	3,17	1,83	2,62	1,89	1,1	1,78	1,138	0,79
Winding Inductance (+/- 10%)	Lu-v	[mH]	47,6	27,63	17,3	20,98	12,8	7,4	13,4	9,68	5,66	9,99	6,4	0,44
Derating Temp. Coeff. Of Back EMF	Dke/Dt	[%/°C]	-0,11											
Nominal Voltage	Vn	[V]	375	371	360	371	379	355	342,4	380	356,8	343	359	369
Losses	Loss	[kW]	0,13	0,13	0,130	0,170	0,170	0,170	0,23	0,23	0,23	0,260	0,260	0,260
Minimum Flow Rate	Flow	[L/min]	n.a.											
Efficiency	Eff	[%]	0,9	0,92	0,927	0,930	0,937	0,940	0,925	0,930	0,930	0,934	0,938	0,940
Knee Speed @ 380Vac	nknee1	[rpm]	3036	4089	5273	3069	4001	5362	3343	3968	5340	3338	4239	5160
Knee Speed @ 480Vac	nknee2	[rpm]	3921	5273	6810	3944	5133	6885	4305	5107	6000	4287	5455	6685
Knee Speed 380Vac and Mmax	nknee3	[rpm]	1461	2106	2809	1689	2302	3187	1824	2216	3021	1822	2367	2910
Knee Speed 480Vac and Mmax	nknee4	[rpm]	2005	2809	3690	2270	3040	4152	2408	2901	4200	2395	3081	3764
Maximum Values														
Max. Torque	Mmax	[Nm]	14			28			42			58		
Max. Current (peak value)	Imax	[A]	8,95	11,75	14,8	17,7	22,6	29,7	28,23	33,2	43,4	38,7	48,4	58,0
Max. Saturation Speed @ 380Vac	nmax1	[rpm]	3400	4440	5680	3360	4260	5520	3560	4200	5520	3540	4440	5280
Max. Saturation Speed @ 480Vac	nmax2	[rpm]	4300	5640	7120	4200	5400	7090	4480	5280	6960	4500	5580	6720
Max. Mechanical Speed	nmax	[rpm]	6000											
Mechanical Data (+/- 10%)														
Inertia	Jm	[kgcm²]	1,7			3,2			4,6			6		
Mass	M	[kg]	5			7			9			11		
Technical Data of the holding brake														
Holding Torque	MBr	[Nm]	10											
Rated Voltage (±10%)	UBr	[Vdc]	24											
Rated Current 1)	IBr	[A]	0,65											
Mass	MBr	[kg]	0,7											
Inertia	JBr	[kgcm²]	1,07											
Additional motor length	Length	[mm]	33											

Test Condition
1) Motor flanged on heatsink 300x300x20; Chopper frequency 8kHz

U305W Models

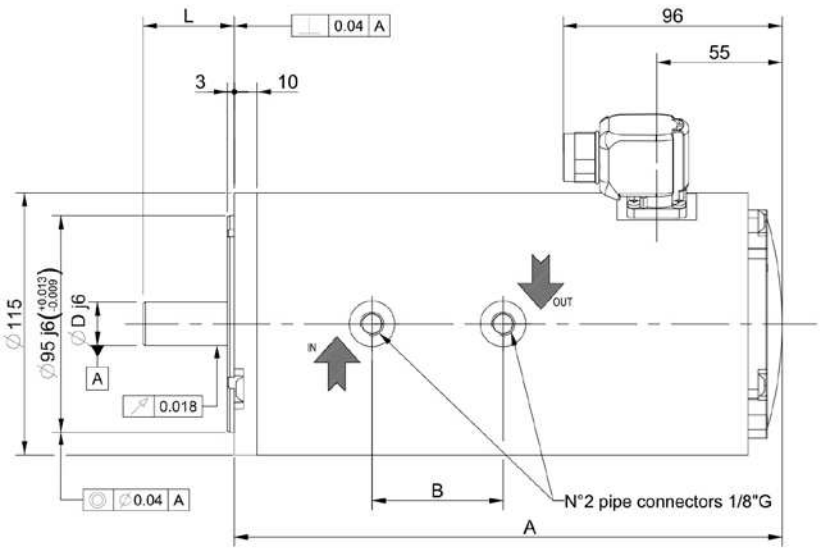

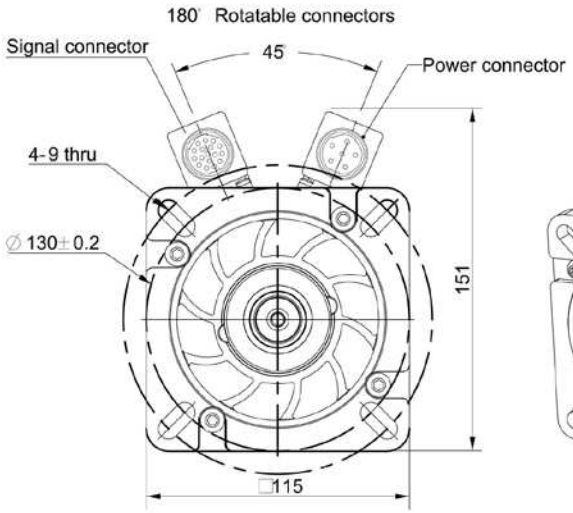

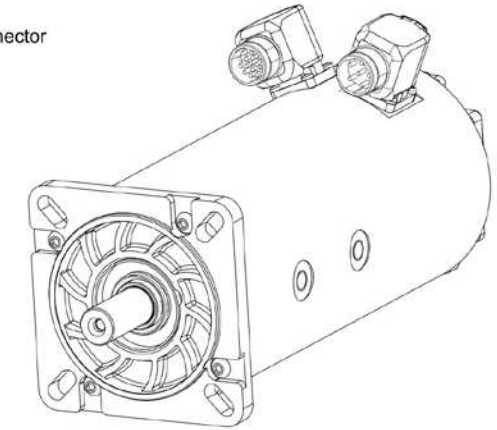

DIMENSIONS

MOTOR TYPE	A [1]	A[1] (with brake or inertiaw)	B	Shaft Dimensions	
				∅ D*L [2]	∅ D*L with key
U305W06	239	272	57,5	24*50	24*50
U305W09	283	316	101,5	24*50	24*50
U305W12	327	360	145,5	24*50	24*50

Max. Radial Load
applicable in the middle of the shaft extension

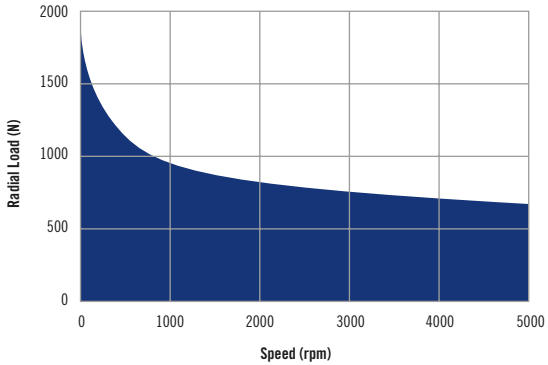

1) Be carefully, with encoder: EQN1337; ECN1325 the total length is an additional 5mm.
2) Shaft dimension according to DIN 748-1 column (b): simultaneous transmission of torque and a know bending moment.

Water Cooling - For inverter rated Voltage 380Vac to 480Vac

Motor Type			06		09		12	
Rated Speed	nM	[rpm]	3000	5000	3000	5000	3000	5000
Stall Torque 1)	Md0	[Nm]	13,3		21,2		29,1	
Current @ Stall Torque 1)	Id0	[A]	8,5	13,46	14,3	22,1	19,3	31,4
Number of Poles	2p		8					
Nominal Rating								
Rated Torque 1)	MdN	[Nm]	13,1	12,9	20,9	20,6	28,7	28,3
Rated Current 1)	IdN	[A]	8,35	13	14,1	21,5	19	30,4
Rated Power	PdN	[kW]	4,13	6,76	6,58	10,79	9,04	14,82
Voltage Constant (+/- 10%)	Ke20°C	[Vrms/1000rpm]	102,3	64	96,6	62,5	98,5	60,6
Torque Constant (+/- 10%)	Kt20°C	[Nm/A]	1,69	1,06	1,6	1,03	1,63	1,00
Winding Resistance (+/- 10%)	Ru-v	[Ω]	3,66	1,45	1,86	0,777	1,32	0,5
Winding Inductance (+/- 10%)	Lu-v	[mH]	16,53	6,55	9,83	4,1	7,66	2,9
Derating Temp. Coeff. Of Back EMF	Dke/Dt	[%/°C]	-0,11					
Nominal Voltage	Vn	[V]	357	358	337,4	350	344	340
Losses	Loss	[kW]	0,600	0,600	0,9	0,9	1,100	1,100
Minimum Flow Rate	Flow	[L/min]	0,85	0,87	1,23	1,3	1,6	1,63
Efficiency	Eff	[%]	0,875	0,920	0,860	0,925	0,890	0,925
Knee Speed @ 380Vac	nknee1	[rpm]	3176	5257	3368	5383	3290	5538
Knee Speed @ 480Vac	nknee2	[rpm]	4104	6752	4338	6902	4233	7095
Knee Speed 380Vac and Mmax	nknee3	[rpm]	1999	3437	2210	3616	2193	3771
Knee Speed 480Vac and Mmax	nknee4	[rpm]	2644	4452	2889	4660	2858	4846
Maximum Values								
Max. Torque	Mmax	[Nm]	28		42		56	
Max. Current (peak value)	Imax	[A]	20,7	32,8	32,8	50,8	43,0	69,8
Max. Saturation Speed @ 380Vac	nmax1	[rpm]	3960	6240	4140	6300	4050	6640
Max. Saturation Speed @ 480Vac	nmax2	[rpm]	4980	7840	5220	8190	5130	8000
Max. Mechanical Speed	nmax	[rpm]	6000					
Mechanical Data (+/- 10%)								
Inertia	Jm	[kgcm²]	3,2		4,6		6	
Mass	M	[kg]	8		10		12	
Technical Data of the holding brake								
Holding Torque	MBr	[Nm]	10					
Rated Voltage (±10%)	UBr	[Vdc]	24					
Rated Current 1)	IBr	[A]	0,65					
Mass	MBr	[kg]	0,7					
Inertia	JBr	[kgcm²]	1,07					
Additional motor length	Length	[mm]	33					

Test Condition
1) Water inlet temperature max 20°C; Chopper frequency 8kHz

U305 Ordering Code

Example Code

U3 05 N 03 30 3 R09 0 01 1 G2 0000000

Family Code

code	description	code	description	Cooling code	Cooling description	Stall Torque code	Stall Torque description	Speed code	Speed description	Voltage code	Voltage description
U3	Ultract 3	05	Size 5	N	Natural cooling	03	3,7 Nm	30	3000 rpm	3	380V AC 3 phase
						06	7,2 Nm	40	4000 rpm		
						09	10,5 Nm	50	5000 rpm		
						12	14 Nm				
				W	Water cooling	06	13,3 Nm	30	3000 rpm		
						09	21,2 Nm	50	5000 rpm		
						12	29,1 Nm				

Option

Position Sensor code	Position Sensor description	Brake code	Brake description	Connector code	Connector description	Thermal Sensor Code	Thermal Sensor Description	Shaft code	Shaft description
Z00	No Sensor	0	No Brake	01	Std Coninvers PW & Sig	1	KTY84/PTC130	G1	19 x 40
R09	TS2640N101E64 Resolver 2 poles	B	Brake	ACCORDING TO MOTOR DATA		2	PT1000/PTC130		**Only available for:** N03, N06, N09, N12
M06	ECI 1319 EnDAT 01 EnDat 2.2	J	Inertia					G2	24 x 50
M07	ECI 1319 EnDAT 22 EnDat 2.2								**Only available for:** W06, W09, W12
N07	EQI 1331 EnDAT 21 EnDat 2.2							K1	KEY 6x6x28 and G1 Shaft
N08	EQI 1331 EnDAT 01 EnDat 2.2								**Only available for:** N03, N06, N09
C00	ECN 1313 EnDAT 01 EnDat 2.2							K2	KEY 8x7x32 and G2 Shaft
C01	ECN1325 EnDAT 22 EnDat 2.2								**Only available for:** N12, W06, W09, W12
Q01	EQN 1325 EnDAT 01 Endat 2.1								
U00	EQN 1325 EnDAT 01 Endat 2.2								
U01	EQN 1337 EnDAT 01 Endat 2.2								
S00	ERN 1385								

Label Pos Code	Label Pos Description	Base Plate code	Base Plate description	Motor Color code	Motor Color Description	Label Pos code	Label Pos description	Package code	Package description	Custom Documentation code	Custom Documentation description
0	STD Flange	0	NO Base Plate	0	STD Black rear cover Blu	0	STD Nameplate Right side		STD Package	00	STD Phasing/ Test report

U307 Models

Supported Models

U307N
U307F
U307W

U307N Models

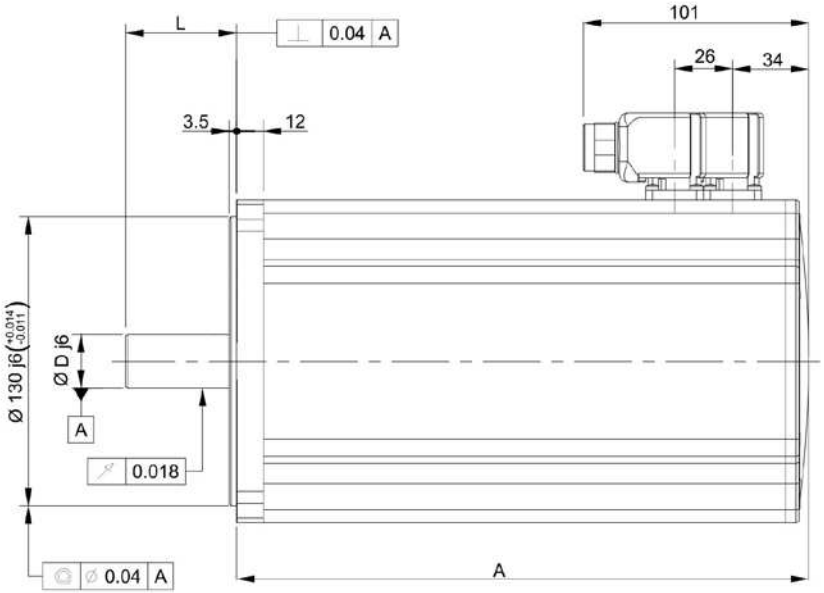

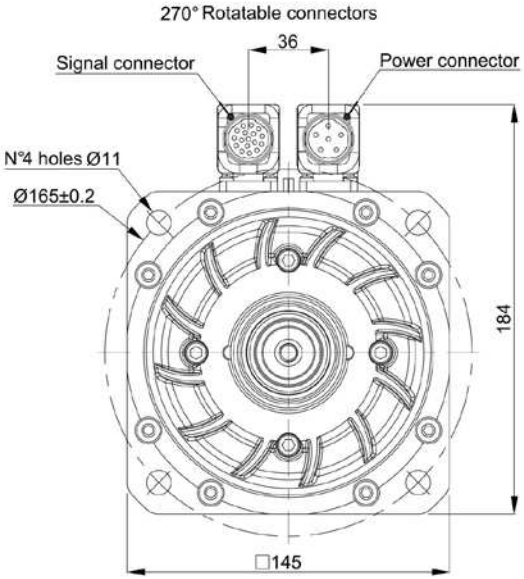

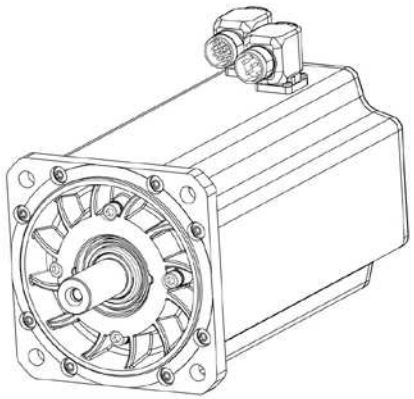

DIMENSIONS

			Shaft Dimensions	
MOTOR TYPE	**A**	**A (with brake or inertia)**	**Ø D*L [1]**	**Ø D*L with key**
U307N10	209	259	24*50	24*50
U307N20	258	308	24*50	24*50
U307N30	308	358	24*50	24*50
U307N40	359	409	28*60	28*60

1) Shaft dimension according to DIN 748-1 column (b): simultaneous transmission of torque and a know bending moment.

Max. Radial Load
applicable in the middle of the shaft extension

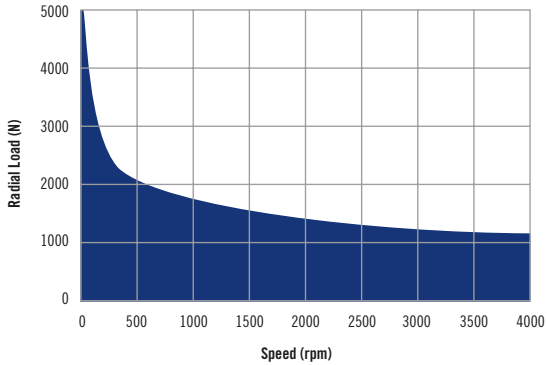

Natural Convection Cooling - For inverter rated Voltage 380Vac to 480Vac

Motor Type			10			20			30			40		
Rated Speed	nM	[rpm]	2000	3000	4000	2000	3000	4000	2000	3000	4000	2000	3000	4000
Stall Torque 1)	Md0	[Nm]	10			19			27			35		
Current @ Stall Torque 1)	Id0	[A]	3,87	5,6	7,2	7	10,6	13,8	10	15	18	12,3	19,4	24,6
Number of Poles	2p		8											
Nominal Rating														
Rated Torque 1)	MdN	[Nm]	9,1	8,5	8	16	11	8,1	23	19	14,4	32	26	21
Rated Current 1)	IdN	[A]	3,5	4,8	5,7	6	6,6	5,8	8,5	10,4	9,5	11,23	14,7	14,9
Rated Power	PdN	[kW]	1,90	2,73	3,35	3,37	3,7	3,42	4,83	6,06	6,02	6,70	8,32	8,99
Voltage Constant (+/- 10%)	Ke20°C	[Vrms/1000rpm]	167	116	90,26	173	115	89,7	174	116	96,7	183,2	116	91,6
Torque Constant (+/- 10%)	Kt20°C	[Nm/A]	2,77	1,92	1,49	2,86	1,908	1,49	2,88	1,92	1,60	3,03	1,92	1,51
Winding Resistance (+/- 10%)	Ru-v	[Ω]	6,3	2,8	1,8	2,51	1,1	0,67	1,35	0,6	0,42	0,982	0,405	0,245
Winding Inductance (+/- 10%)	Lu-v	[mH]	39,65	19	11,5	19,1	8,5	5,15	12,5	5,55	3,85	9,92	4,1	2,48
Derating Temp. Coeff. Of Back EMF	Dke/Dt	[%/°C]	-0,11											
Nominal Voltage	Vn	[V]	356	358	365	354	342	346,7	350	343	374	367	342	355
Losses	Loss	[kW]	0,210	0,210	0,210	0,25	0,25	0,25	0,310	0,310	0,310	0,350	0,350	0,350
Minimum Flow Rate	Flow	[L/min]	n.a.											
Efficiency	Eff	[%]	0,895	0,928	0,930	0,917	0,919	0,900	0,939	0,945	0,940	0,950	0,985	0,955
Knee Speed @ 380Vac	nknee1	[rpm]	2132	3117	4115	2147	3358	4400	2169	3340	4065	2062	3341	4294
Knee Speed @ 480Vac	nknee2	[rpm]	2757	4049	5433	2766	4386	5300	2784	4298	5004	2633	4283	5538
Knee Speed 380Vac and Mmax	nknee3	[rpm]	1126	1793	2369	1236	1988	2600	1283	2029	2491	1284	2100	2756
Knee Speed 480Vac and Mmax	nknee4	[rpm]	1510	2341	3071	1631	2576	2900	1676	2616	3194	1673	2700	3529
Maximum Values														
Max. Torque	Mmax	[Nm]	33			65			100			130		
Max. Current (peak value)	Imax	[A]	14,9	21,5	27,6	28,3	42,6	54,8	43,4	65,0	78,1	53,6	84,6	107,2
Max. Saturation Speed @ 380Vac	nmax1	[rpm]	2400	3480	4400	2300	3500	4500	2295	3450	4086	2184	3456	4420
Max. Saturation Speed @ 480Vac	nmax2	[rpm]	3100	4400	5580	2950	4350	5400	2925	4440	5161	2800	4400	5600
Max. Mechanical Speed	nmax	[rpm]	6000											
Mechanical Data (+/- 10%)														
Inertia	Jm	[kgcm²]	8			14			20			26		
Mass	M	[kg]	12			16			20			24		
Technical Data of the holding brake														
Holding Torque	MBr	[Nm]	32											
Rated Voltage (±10%)	UBr	[Vdc]	24											
Rated Current 1)	IBr	[A]	0,93											
Mass	MBr	[kg]	2,4											
Inertia	JBr	[kgcm²]	13,5											
Additional motor length	Length	[mm]	50											

Test Condition

1) Motor flanged (Tflange = 30°C or heatsinker 500x500x20); Chopper frequency 8kHz

U307F Models

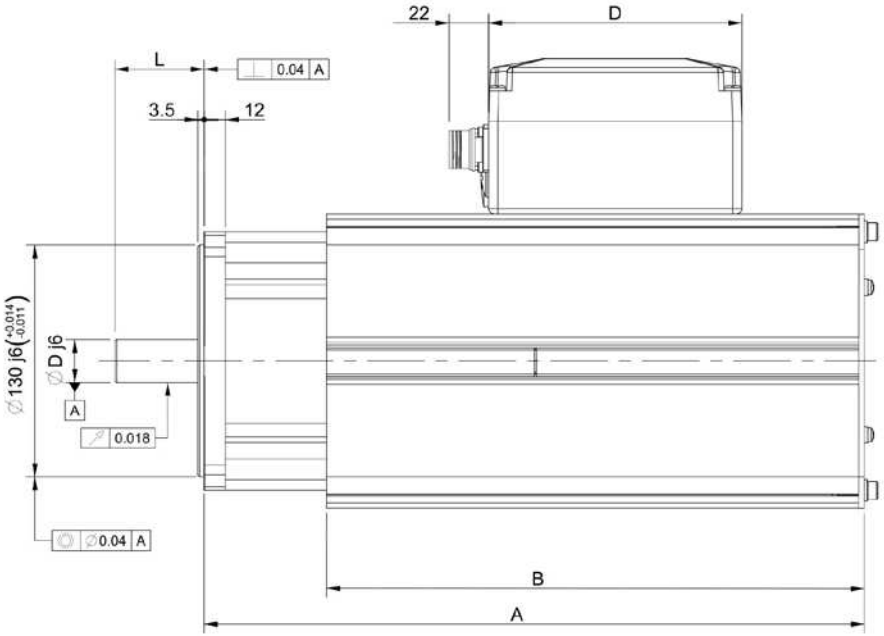

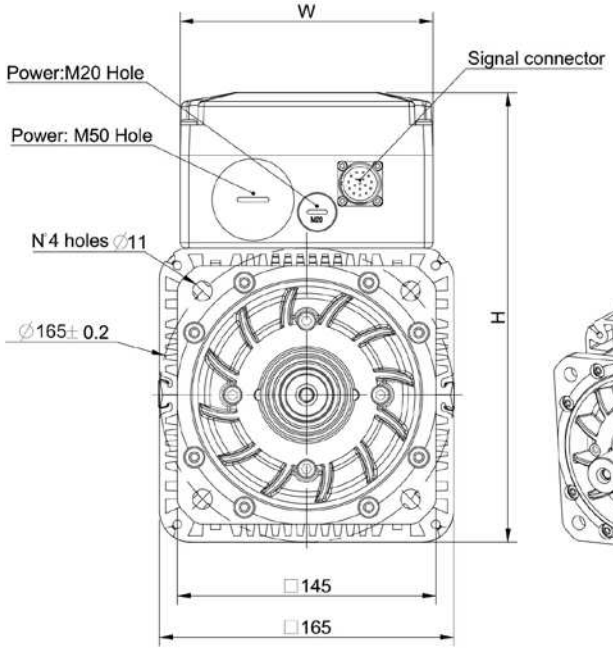

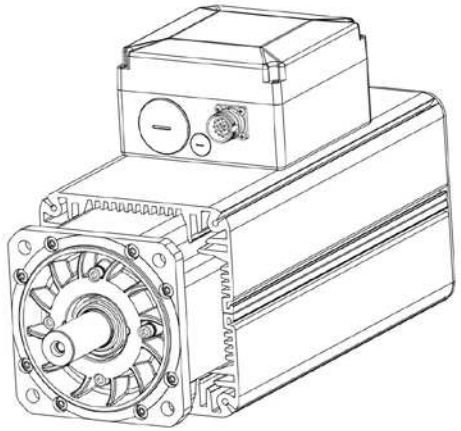

Max. Radial Load
applicable in the middle of the shaft extension

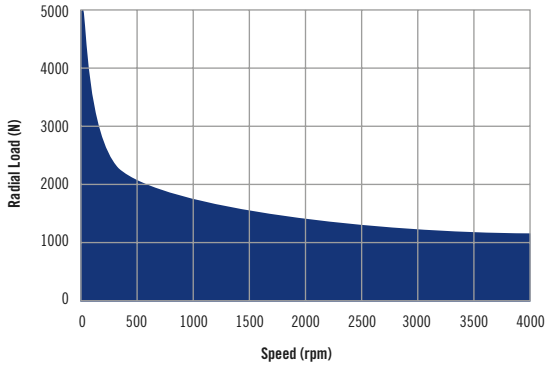

DIMENSIONS

				Shaft Dimensions	
MOTOR TYPE	**A**	**A (with brake or inertiaw)**	**B**	**∅ D*L [1]**	**∅ D*L with key**
U307F20	356	406	287	24*50	24*50
U307F30	406	456	337	28*60	28*60
U307F40	456	506	387	32*60	32*80

1) Shaft dimension according to DIN 748-1 column (b): simultaneous transmission of torque and a know bending moment.

Servo Fan Cooling - For inverter rated Voltage 380Vac to 480Vac

Motor Type			20			30			40		
Rated Speed	nM	[rpm]	2000	3000	4000	2000	3000	4000	2000	3000	4000
Stall Torque 1)	Md0	[Nm]		30			46			62	
Current @ Stall Torque 1)	Id0	[A]	12,45	17,2	23,8	18,5	26,5	35	25	35,7	45,6
Number of Poles	2p						8				
Nominal Rating											
Rated Torque 1)	MdN	[Nm]	28	26,5	24,5	42,5	41,6	37	57,5	55	51
Rated Current 1)	IdN	[A]	11,8	15,6	19,8	17,4	23,7	28,5	25,2	32,2	38,5
Rated Power	PdN	[kW]	5,86	8,3	10,26	9,05	13,08	15,50	12,04	17,28	21,36
Voltage Constant (+/- 10%)	Ke20°C	[Vrms/1000rpm]	159,6	114,9	83,8	162,7	114,9	86,17	153	114,9	89,4
Torque Constant (+/- 10%)	Kt20°C	[Nm/A]	2,64	1,9	1,39	2,69	1,90	1,43	2,53	1,90	1,48
Winding Resistance (+/- 10%)	Ru-v	[Ω]	2,04	1,058	0,554	1,2	0,6	0,338	0,73	0,411	0,249
Winding Inductance (+/- 10%)	Lu-v	[mH]	16,84	8,723	4,55	11,68	5,8	3,27	7,76	4,36	2,64
Derating Temp. Coeff. Of Back EMF	Dke/Dt	[%/°C]					-0,11				
Nominal Voltage	Vn	[V]	353,8	369	350	357	367	359	335	366	373
Losses	Loss	[kW]		0,6			1,0			1,3	
Minimum Flow Rate	Flow	[L/min]					n.a.				
Efficiency	Eff	[%]	0,885	0,910	0,920	0,898	0,920	0,930	0,920	0,930	0,940
Knee Speed @ 380Vac	nknee1	[rpm]	2114	3029	4288	2088	3046	4179	2223	3048	4004
Knee Speed @ 480Vac	nknee2	[rpm]	2731	3910	5546	2693	3931	5425	2875	3927	5183
Knee Speed 380Vac and Mmax	nknee3	[rpm]	1351	1938	2819	1334	2004	2694	1470	2020	2647
Knee Speed 480Vac and Mmax	nknee4	[rpm]	1769	2509	3620	1737	2581	3452	1904	2559	3388
Maximum Values											
Max. Torque	Mmax	[Nm]		65			100			130	
Max. Current (peak value)	Imax	[A]	30,8	42,8	58,7	46,4	65,8	87,7	64,3	85,6	110,2
Max. Saturation Speed @ 380Vac	nmax1	[rpm]	2520	3450	4800	2450	3500	4680	2650	3500	4500
Max. Saturation Speed @ 480Vac	nmax2	[rpm]	3200	4380	6100	3150	4400	5880	3350	4440	5750
Max. Mechanical Speed	nmax	[rpm]					6000				
Mechanical Data (+/- 10%)											
Inertia	Jm	[kgcm²]		14			20			26	
Mass	M	[kg]		19			25			31	
Technical Data of the holding brake											
Holding Torque	MBr	[Nm]					32				
Rated Voltage (±10%)	UBr	[Vdc]					24				
Rated Current 1)	IBr	[A]					93,00				
Mass	MBr	[kg]					2,4				
Inertia	JBr	[kgcm²]					13,5				
Additional motor length	Length	[mm]					50				
Box Connection	type						A				

For Box dimensions see page 8-9

Test Condition

1) Motor tested in horizontal position in free still air, ambient temperature 30°C; Chopper frequency 8kHz

U307W Models

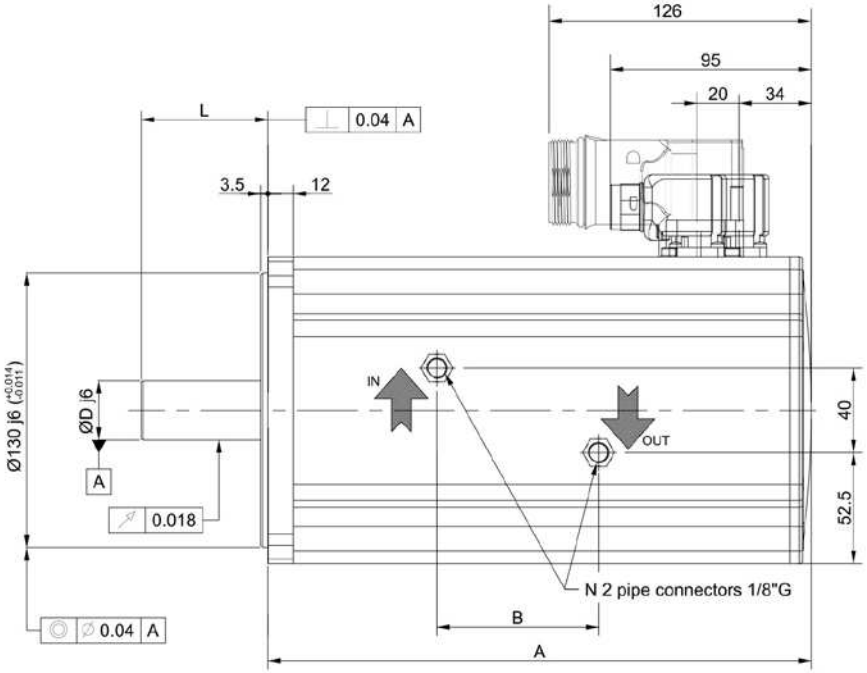

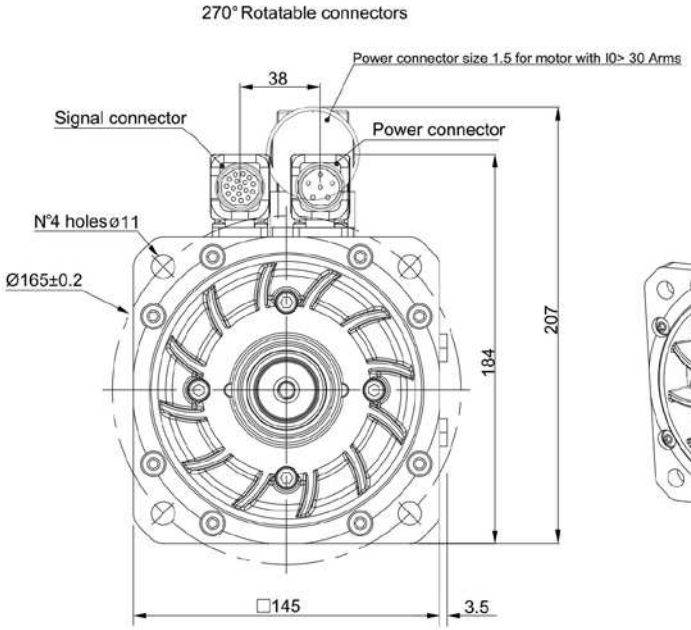

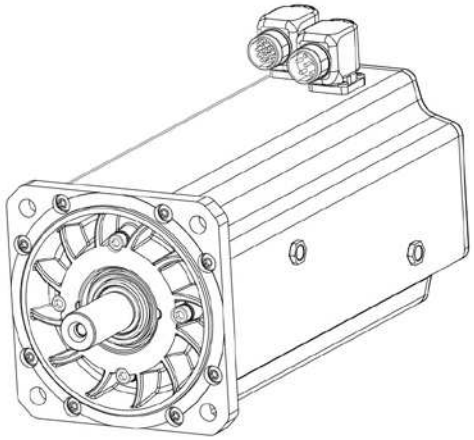

Max. Radial Load
applicable in the middle of the shaft extension

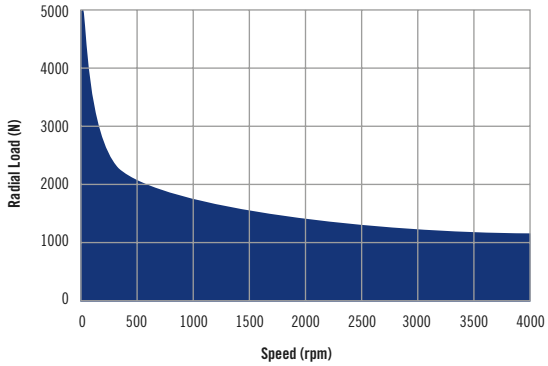

DIMENSIONS

				Shaft Dimensions	
MOTOR TYPE	**A**	**A* (with brake or inertiaw)**	**B**	**Ø D*L (1)**	**Ø D*L with key**
U307W20	258	308	57	28*60	28*60
U307W30	308	358	105	32*80	32*80
U307W40	359	409	155	32*80	32*80

1) Shaft dimension according to DIN 748-1 column (b): simultaneous transmission of torque and a know bending moment.
* When considering brake option, multiple solutions exist. Please contact technical office for verification.

Water Cooling - For inverter rated Voltage 380Vac to 480Vac

Motor Type			20			30			40		
Rated Speed	nM	[rpm]	2000	3000	4000	2000	3000	4000	2000	3000	4000
Stall Torque 1)	Md0	[Nm]		35			58			80	
Current @ Stall Torque 1)	Id0	[A]	15,8	23	28	27	36,7	50,5	38,5	53	70,6
Number of Poles	2p						8				
Nominal Rating											
Rated Torque 1)	MdN	[Nm]	33	30	29,5	55	53	52	77	70	68
Rated Current 1)	IdN	[A]	15,7	20,0	24	26,6	35	47,5	38,2	51,6	68,3
Rated Power	PdN	[kW]	6,95	9,8	12,26	11,53	16,98	22,05	16,20	22,30	28,46
Voltage Constant (+/- 10%)	Ke20°C	[Vrms/1000rpm]	147,4	102,0	83,3	145,2	106	77,45	140,85	102,43	76,82
Torque Constant (+/- 10%)	Kt20°C	[Nm/A]	2,44	1,70	1,378	2,40	1,76	1,28	2,33	1,69	1,27
Winding Resistance (+/- 10%)	Ru-v	[Ω]	1,75	0,850	0,56	0,935	0,5	0,265	0,642	0,34	0,191
Winding Inductance (+/- 10%)	Lu-v	[mH]	13,8	6,720	4,435	8,67	4,66	2,467	6,37	3,37	1,895
Derating Temp. Coeff. Of Back EMF	Dke/Dt	[%/°C]					-0,11				
Nominal Voltage	Vn	[V]	340,6	339	357,4	336	357	341	333	352	346
Losses	Loss	[kW]		0,9			1,4			2,1	
Minimum Flow Rate	Flow	[L/min]		2			3			5	
Efficiency	Eff	[%]	0,880	0,885	0,900	0,885	0,905	0,920	0,880	0,900	0,920
Knee Speed @ 380Vac	nknee1	[rpm]	2184	3297	4113	2197	3087	4333	2216	3123	4237
Knee Speed @ 480Vac	nknee2	[rpm]	2800	4264	5420	2825	4023	5567	2847	4001	5424
Knee Speed 380Vac and Mmax	nknee3	[rpm]	1509	2276	2856	1583	2223	3145	1636	2320	3155
Knee Speed 480Vac and Mmax	nknee4	[rpm]	1961	2938	3669	2054	2873	4024	2116	2980	4034
Maximum Values											
Max. Torque	Mmax	[Nm]		65			100			130	
Max. Current (peak value)	Imax	[A]	33,35	47,9	59	52,0	70,9	97,5	70,0	95,9	128,0
Max. Saturation Speed @ 380Vac	nmax1	[rpm]	2730	3900	4800	2760	3780	5180	2840	3900	5220
Max. Saturation Speed @ 480Vac	nmax2	[rpm]	3450	4950	6050	3500	4750	6500	3600	4980	6600
Max. Mechanical Speed	nmax	[rpm]					6000				
Mechanical Data (+/- 10%)											
Inertia	Jm	[kgcm²]		14			20			26	
Mass	M	[kg]		16			20			24	
Technical Data of the holding brake											
Holding Torque	MBr	[Nm]					32				
Rated Voltage (±10%)	UBr	[Vdc]					24				
Rated Current 1)	IBr	[A]					93,00				
Mass	MBr	[kg]					2,4				
Inertia	JBr	[kgcm²]					13,5				
Additional motor length	Length	[mm]					50				

Test Condition
1) Water inlet temperature max 20°C; Chopper frequency 8kHz

U307 Ordering Code

Example Code

U3 07 W 20 20 3 R09 0 01 1 G2 0000000

Family Code

code	description
U3	Ultract 3

Family Code

code	description
07	Size 7

Cooling code	Cooling description	Stall Torque code	Stall Torque description
N	Natural cooling	10	10 Nm
		20	19 Nm
		30	27 Nm
		40	35 Nm
F	Fan cooling	20	30 Nm
		30	46 Nm
		40	62 Nm
W	Water cooling	20	35 Nm
		30	58 Nm
		40	80 Nm

Speed code	Speed description
20	2000rpm
30	3000rpm
40	4000rpm

Voltage code	Voltage description
3	380V AC 3 phase

Option

Position Sensor code	Position Sensor description
Z00	No Sensor
R09	TS2640N101E64 Resolver 2 poles
M06	ECI 1319 EnDAT 01 EnDat 2.2
M07	ECI 1319 EnDAT 22 EnDat 2.2
N07	EQI 1331 EnDAT 21 EnDat 2.2
N08	EQI 1331 EnDAT 01 EnDat 2.2
C00	ECN 1313 EnDAT 01 EnDat 2.2
C01	ECN1325 EnDAT 22 EnDat 2.2
Q01	EQN 1325 EnDAT 01 Endat 2.1
U00	EQN 1325 EnDAT 01 Endat 2.2
U01	EQN 1337 EnDAT 01 Endat 2.2
S00	ERN 1385

Brake code	Brake description
0	No Brake
B	Brake
J	Inertia

Connector code	Connector description
01	Std Coninvers PW & Sig [1]
A0	142x142x87.5 (M23 17 pin signal conn) [2]

ACCORDING TO MOTOR DATA

[1] Only for N and W type

[2] Only for F type

Thermal Sensor Code	Thermal Sensor Description
1	KTY84/PTC130
2	PT1000/PTC130

Shaft code	Shaft description
G1	24 x 50
	Only available for: N10, N20, N30, F20
G2	28 x 60
	Only available for: N40, F30, W20
G3	32 x 60
	Only available for: F40, W30, W40
K1	Key 8x7x32 and G1 Shaft
K2	Key 8x7x40 and G2 Shaft
K3	Key 10x8x40 and G3 Shaft

Label Pos Code	Label Pos Description
0	STD Flange

Base Plate code	Base Plate description
0	NO Base Plate

Motor Color code	Motor Color Description
0	STD Black rear cover Blu

Label Pos code	Label Pos description
0	STD Nameplate Right side

Package code	Package description
0	STD Package

Custom Documentation code	Custom Documentation description
00	STD Phasing/ Test report

U310 Models

Supported Models

U310N
U310F
U310W

U310N Models

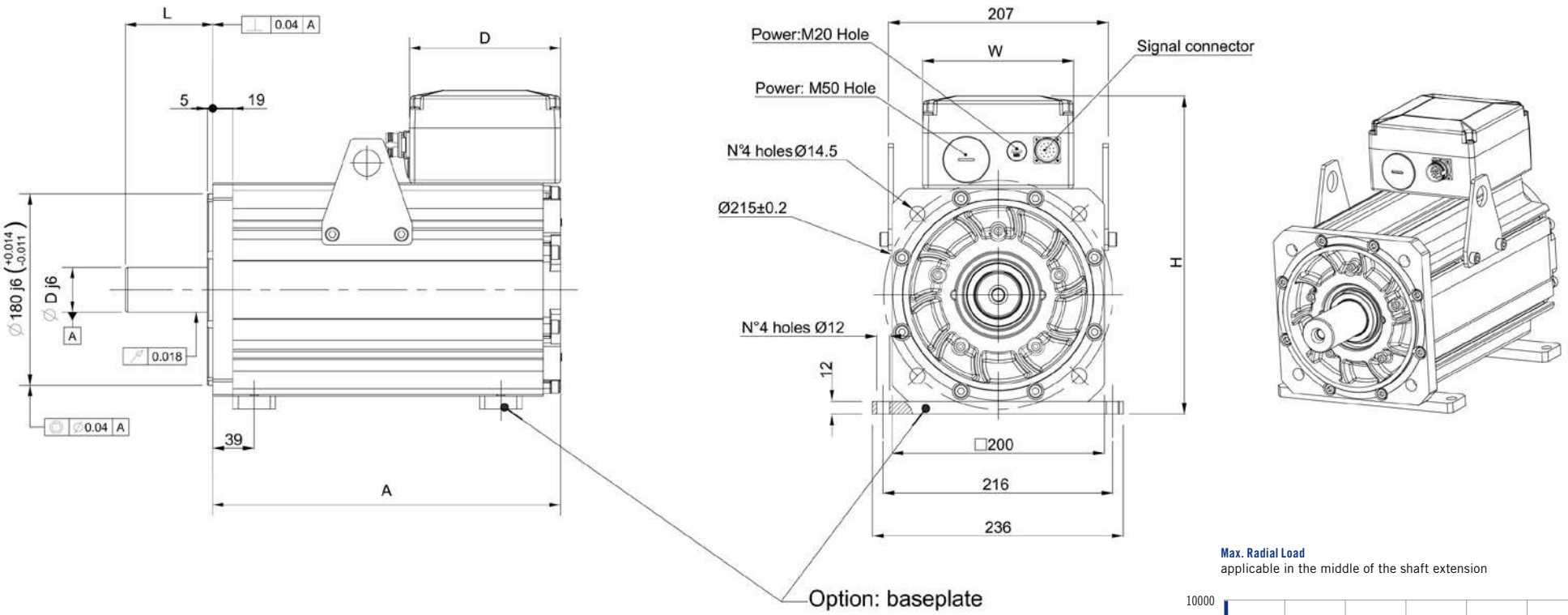

DIMENSIONS

MOTOR TYPE	A	A (with brake or inertia)	Shaft Dimensions	
			∅ D*L [1]	∅ D*L with key
U310N04	255	320	42*82	42*82
U310N07	327	329	42*82	42*82
U310N10	399	464	42*82	42*82
U310N13	471	536	42*82	42*82

1) Shaft dimension according to DIN 748-1 column (b): simultaneous transmission of torque and a know bending moment.

Max. Radial Load
applicable in the middle of the shaft extension

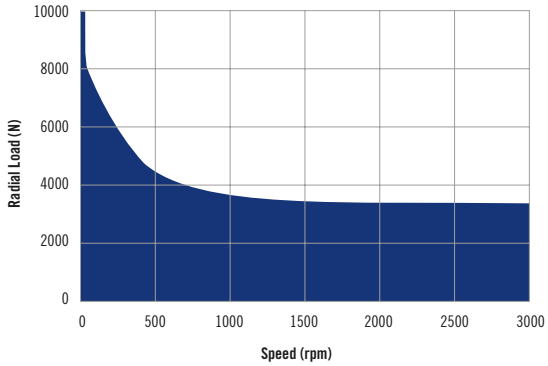

Natural Convection Cooling - For inverter rated Voltage 380Vac to 480Vac

Motor Type			04			07			10			13		
Rated Speed	nM	[rpm]	1000	2000	3000	1000	2000	3000	1000	2000	3000	1000	2000	3000
Stall Torque 1)	Md0	[Nm]	35			60			88			105		
Current @ Stall Torque 1)	Id0	[A]	9	14	20	15	24	35	20	36	55	25	49	64
Number of Poles	2p		8											
Nominal Rating														
Rated Torque 1)	MdN	[Nm]	32,0	31,0	27,0	57,0	50,0	31,0	84,0	73,0	32,0	95,0	80,0	45,0
Rated Current 1)	IdN	[A]	7,9	12,8	16,0	14,3	19,8	29,5	19,0	30,3	27,0	22,3	37,6	27,6
Rated Power	PdN	[kW]	3,3	6,5	8,8	6,0	10,7	9,8	8,8	15,3	10,0	9,9	16,7	14,1
Voltage Constant (+/- 10%)	Ke20°C	[Vrms/1000rpm]	276,9	166,3	113,0	274,5	165,0	110,3	303,5	165,7	110,0	293,2	146,3	111,9
Torque Constant (+/- 10%)	Kt20°C	[Nm/A]	4,580	2,750	1,860	4,540	2,730	1,800	5,020	2,740	1,820	4,850	2,420	1,850
Winding Resistance (+/- 10%)	Ru-v	[Ω]	3,400	1,220	0,554	1,290	0,468	0,208	0,908	0,270	0,120	0,620	0,154	0,090
Winding Inductance (+/- 10%)	Lu-v	[mH]	34,0	8,0	6,0	16,0	6,3	2,8	13,9	4,1	1,8	9,1	2,3	1,28
Derating Temp. Coeff. Of Back EMF	Dke/Dt	[%/°C]	-0,11											
Nominal Voltage	Vn	[V]	316	354	345	302	335	332	333	350	335	314	304	340
Minimum Flow Rate	Flow	[L/min]	n.a.											
Losses	Loss	[kW]	0,55			0,63			0,78			0,81		
Efficiency	Eff	[%]	86	92	93,00	90	94	96	92	95	93	92	95	95
Knee Speed @ 380Vac	nknee1	[rpm]	1219	2153	3300	1272	2269	3450	1149	2174	3410	1219	2507	3356
Knee Speed @ 480Vac	nknee2	[rpm]	1559	2740	4217	1621	2912	4397	1463	2756	4312	1549	3175	4244
Knee Speed 380Vac and Mmax	nknee3	[rpm]	730	1577	1876	782	1278	1985	694	1343	2039	754	1578	2146
Knee Speed 480Vac and Mmax	nknee4	[rpm]	953	2039	2141	1013	1650	2540	897	1716	2595	973	2014	2733
Maximum Values														
Max. Torque	Mmax	[Nm]	105			210			310			410		
Max. Current (peak value)	Imax	[A]	29	48	70	58	96	144	77	141	213	106	212	277
Max. Saturation Speed @ 380Vac	nmax1	[rpm]	1372	2286	3560	1384	2430	3645	1252	2294	3453	1296	2597	3397
Max. Saturation Speed @ 480Vac	nmax2	[rpm]	1733	2887	4500	1749	3200	4600	1582	2897	4362	1637	3281	4291
Max. Mechanical Speed	nmax	[rpm]	6000											
Mechanical Data (+/- 10%)														
Inertia	Jm	[kgcm²]	50			90			130			170		
Mass	M	[kg]	35			49			57			70		
Technical Data of the holding brake														
Holding Torque	MBr	[Nm]	143											
Rated Voltage (±10%)	UBr	[Vdc]	24											
Rated Current 1)	IBr	[A]	1,78											
Mass	MBr	[kg]	11											
Inertia	JBr	[kgcm²]	48,6											
Additional motor length	Length	[mm]	65											
Box connection	type		A			A		B	A	B		A	B	

For Box dimensions see page 8-9

Test Condition

1) Test Conditions: Motor flanged (Tflange = 30°C), to use on baseplate derate -30%; Chopper frequency minimum required 4kHz

U310F Models

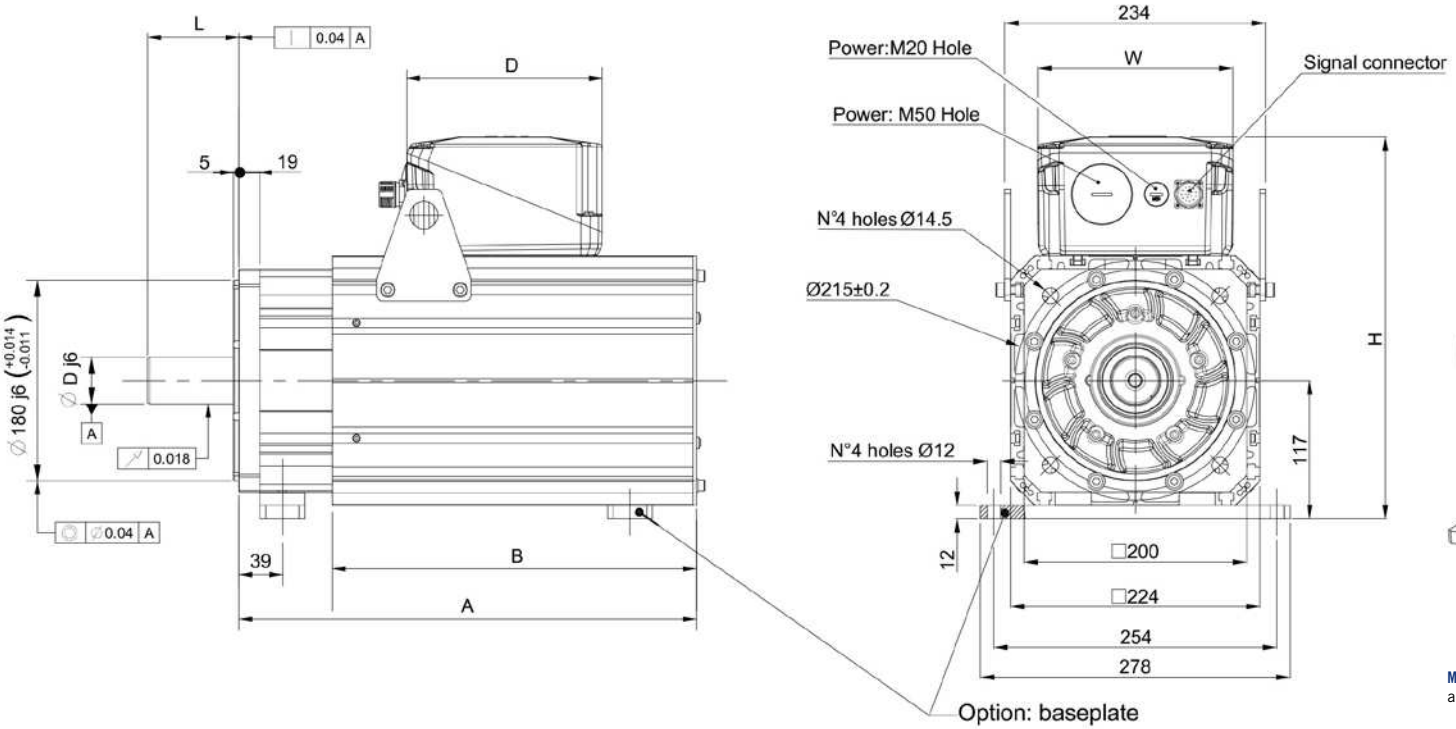

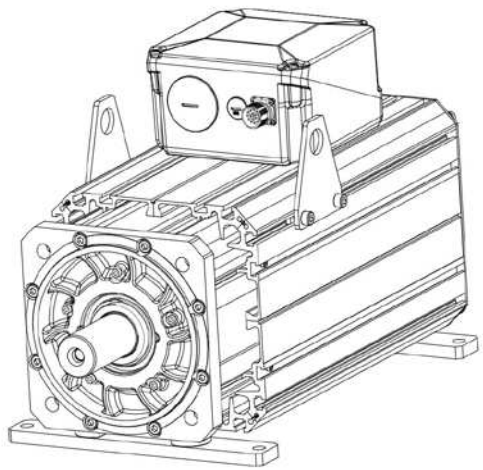

Max. Radial Load
applicable in the middle of the shaft extension

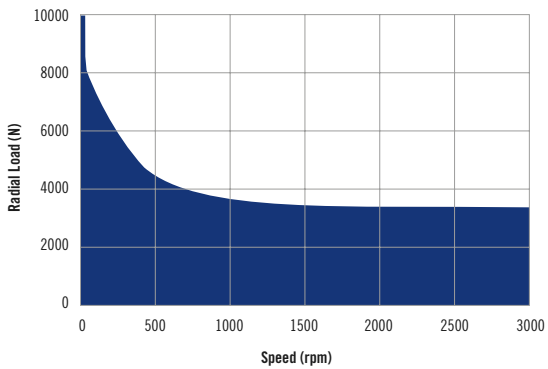

DIMENSIONS

				Shaft Dimensions	
MOTOR TYPE	**A**	**A (with brake or inertiaw)**	**B**	**∅ D*L [1]**	**∅ D*L with key**
U310F04	399	404	255	42*82	42*82
U310F07	411	476	327	42*82	42*82
U310F10	483	548	399	42*82	42*82
U310F13	555	620	471	42*82	42*82

1) Shaft dimension according to DIN 748-1 column (b): simultaneous transmission of torque and a know bending moment.

Servo Fan Cooling - For inverter rated Voltage 380Vac to 480Vac

Motor Type			04			07			10			13		
Rated Speed	nM	[rpm]	1000	2000	3000	1000	2000	3000	1000	2000	3000	1000	2000	3000
Stall Torque 1)	Md0	[Nm]	45			90			130			170		
Current @ Stall Torque 1)	Id0	[A]	11,0	18,5	26,5	22,3	36,0	54,0	29,2	49,0	80,3	39,4	72,0	103,2
Number of Poles	2p		8											
Nominal Rating														
Rated Torque 1)	MdN	[Nm]	42,0	42,0	38,0	74,0	72,0	70,0	100,0	97,0	95,0	149,0	142,0	135,0
Rated Current 1)	IdN	[A]	10,3	17,0	22,3	18,3	33,0	48,0	22,5	42,5	58,6	34,5	61,0	82,0
Rated Power	PdN	[kW]	4,4	8,7	12,1	7,7	15,0	22,3	10,5	20,3	29,8	15,6	30,5	42,4
Voltage Constant (+/- 10%)	Ke20°C	[Vrms/1000rpm]	276,9	160,0	113,0	274,5	165,0	110,3	302,3	173,0	110,0	293,2	154,0	111,9
Torque Constant (+/- 10%)	Kt20°C	[Nm/A]	4,58	2,64	1,86	4,54	2,73	1,82	5,00	2,86	1,82	4,85	2,55	1,85
Winding Resistance (+/- 10%)	Ru-v	[Ω]	3,40	1,12	0,56	1,29	0,47	0,21	0,91	0,26	0,12	0,62	0,15	0,09
Winding Inductance (+/- 10%)	Lu-v	[mH]	34,00	12,00	6,00	16,00	6,32	2,80	13,90	4,06	1,84	9,10	2,40	1,28
Derating Temp. Coeff. Of Back EMF	Dke/Dt	[%/°C]	-0,11											
Nominal Voltage	Vn	[V]	332	352	360	314	359	352	339	359	356	332	318	361
Minimum Flow Rate	Flow	[L/min]	n.a.											
Losses	Loss	[kW]	0,90			1,38			1,68	1,67	1,67	2,08	2,06	2,07
Efficiency	Eff	[%]	83	88	89	85	91	94	86	93	95	88	93	95
Knee Speed @ 380Vac	nknee1	[rpm]	1157	2130	3126	1226	2085	3199	1126	2096	3204	1153	2380	3165
Knee Speed @ 480Vac	nknee2	[rpm]	1485	2754	4062	1566	2687	4135	1435	2699	4061	1471	3081	4011
Knee Speed 380Vac and Mmax	nknee3	[rpm]	730	1271	1874	782	1276	1985	693	1359	2039	754	1552	2146
Knee Speed 480Vac and Mmax	nknee4	[rpm]	953	1652	2412	1013	1650	2543	896	1748	2595	973	1992	2733
Maximum Values														
Max. Torque	Mmax	[Nm]	105			210			310			410		
Max. Current (peak value)	Imax	[A]	29	50	70	58	96	144	78	135	213	106	201	277
Max. Saturation Speed @ 380Vac	nmax1	[rpm]	1372	2520	3560	1384	2430	3650	1257	2320	3453	1296	2620	3397
Max. Saturation Speed @ 480Vac	nmax2	[rpm]	1733	3150	4500	1749	3100	4600	1588	2960	4362	1637	3300	4291
Max. Mechanical Speed	nmax	[rpm]	6000											
Mechanical Data (+/- 10%)														
Inertia	Jm	[kgcm²]	50			90			130			170		
Mass	M	[kg]	46			56			70			78		
Technical Data of the holding brake														
Holding Torque	MBr	[Nm]	143											
Rated Voltage	UBr	[Vdc]	24											
Rated Current 1)	IBr	[A]	1,78											
Mass	MBr	[kg]	11											
Inertia	JBr	[kgcm²]	48,6											
Additional motor length	Length	[mm]	65											
Box connection	type		A		B	B			B			B		

For Box dimensions see page 8-9

Test Condition

1) Motor tested in horizontal position in free still air, ambient temperature 30°C; Chopper frequency minimum required 4kHz

U310W Models

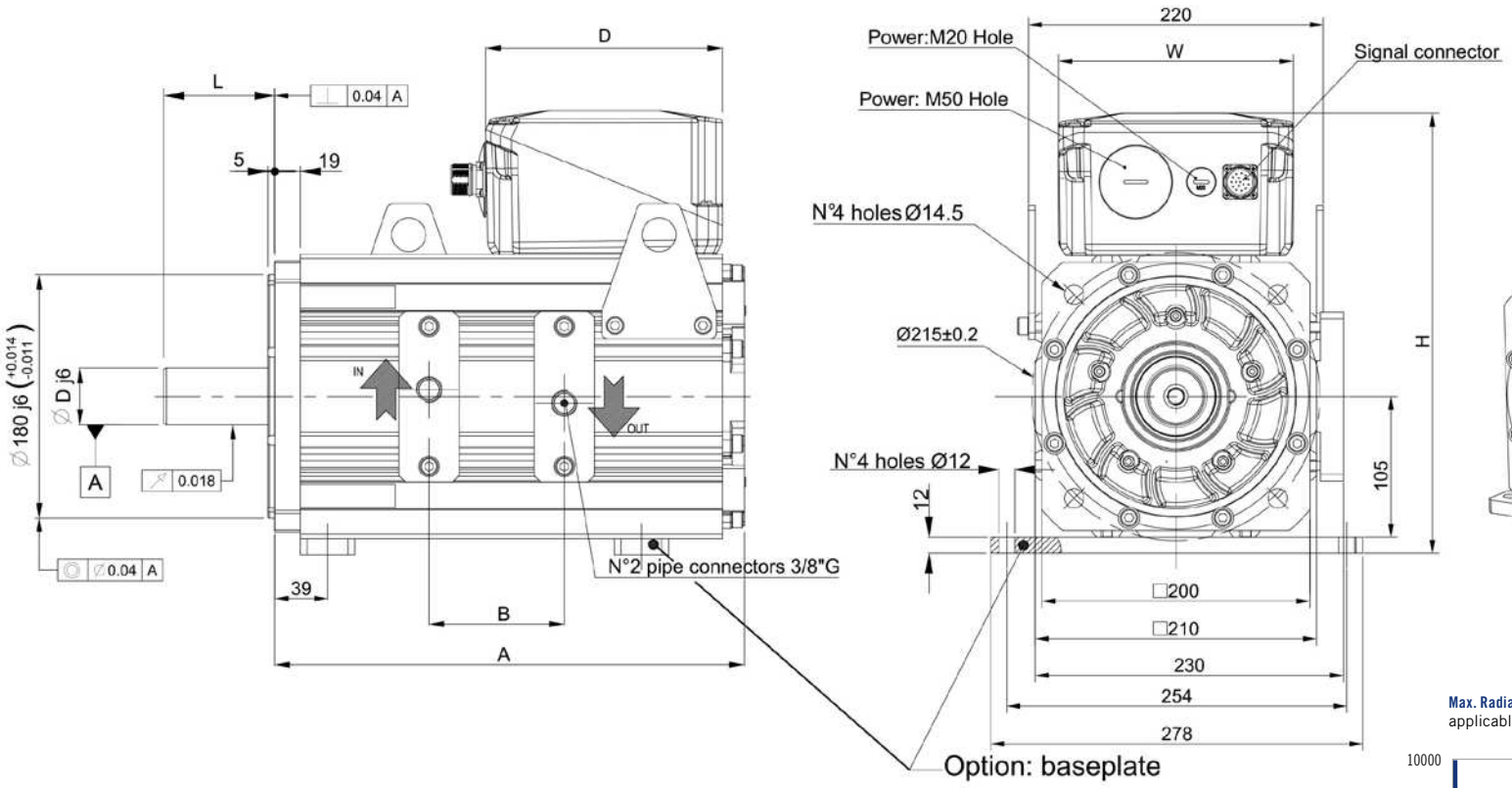

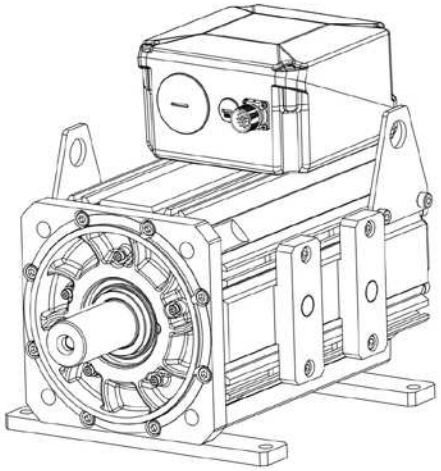

Max. Radial Load
applicable in the middle of the shaft extension

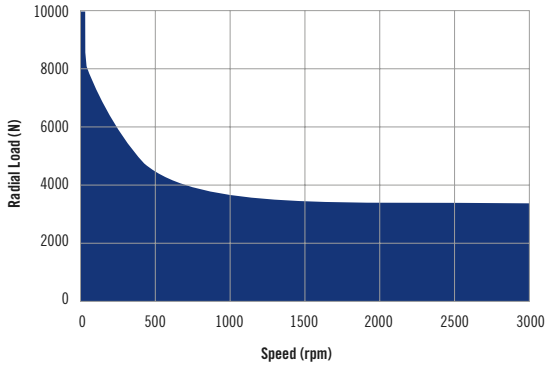

DIMENSIONS

MOTOR TYPE	A	A (with brake or inertiaw)	B	Shaft Dimensions	
				Ø D*L [1]	Ø D*L with key
U310W04	255	320	39	42*82	42*82
U310W07	327	329	110	42*82	42*82
U310W10	399	464	166	42*82	42*82
U310W13	471	536	220	42*82	42*82

1) Shaft dimension according to DIN 748-1 column (b): simultaneous transmission of torque and a know bending moment.

Water Cooling - For inverter rated Voltage 380Vac to 480Vac

Motor Type			04			07			10			13		
Rated Speed	nM	[rpm]	1000	2000	3000	1000	2000	3000	1000	2000	3000	1000	2000	3000
Stall Torque 1)	Md0	[Nm]	55			110			165			220		
Current @ Stall Torque 1)	Id0	[A]	13	26	35	28	50	67	39	78	112	49	96	128
Number of Poles	2p		8											
Nominal Rating														
Rated Torque 1)	MdN	[Nm]	54,0	53,0	53,0	109,0	108,0	108,0	164,0	163,0	160,0	219,0	219,0	219,0
Rated Current 1)	IdN	[A]	12,8	25,0	34,2	27,7	49,7	66,0	39,0	77,5	109,0	48,9	94,5	125,0
Rated Power	PdN	[kW]	5,7	11,1	16,6	11,4	22,7	34,0	17,2	34,1	50,2	22,9	45,9	69,0
Voltage Constant (+/- 10%)	Ke20°C	[Vrms/1000rpm]	275,7	139,1	101,6	257,6	147,0	110,0	275,7	137,8	96,1	293,2	154,0	115,0
Torque Constant (+/- 10%)	Kt20°C	[Nm/A]	4,6	2,3	1,7	4,3	2,4	1,8	4,6	2,3	1,6	4,9	2,5	1,9
Winding Resistance (+/- 10%)	Ru-v	[Ω]	3,4	0,9	0,5	1,1	0,4	0,2	0,8	0,2	0,1	0,6	0,2	0,9
Winding Inductance (+/- 10%)	Lu-v	[mH]	34,0	8,6	4,3	15,0	5,0	2,8	11,5	2,9	1,4	9,1	2,4	1,4
Derating Temp. Coeff. Of Back EMF	Dke/Dt	[%/°C]	-0,11											
Nominal Voltage	Vn	[V]	351	335	356	322	338	373	342	330	340	358	339	375
Motor Loss @ Nominal Power	Loss	[kW]	1,25	1,25	1,24	1,92	1,92	1,92	2,52	2,52	2,51	3,23	3,23	3,23
Minimum Flow Rate	Flow	[L/min]	2,5			4			5			7		
Efficiency	Eff	[%]	86	90	93	86	92	94	87	93	95	88	93	95
Knee Speed @ 380Vac	nknee1	[rpm]	1092	2282	3208	1194	2176	2942	1118	2311	3358	1066	2177	2950
Knee Speed @ 480Vac	nknee2	[rpm]	1407	2910	4080	1529	2785	3757	1431	2937	4259	1365	278	3753
Knee Speed 380Vac and Mmax	nknee3	[rpm]	730	1566	2270	811	1454	1985	770	1618	2349	754	1552	2109
Knee Speed 480Vac and Mmax	nknee4	[rpm]	952	2009	2901	1048	1872	2543	993	2063	2987	973	1992	2694
Maximum Values														
Max. Torque	Mmax	[Nm]	105			210			310			410		
Max. Current (peak value)	Imax	[A]	29	57	78	62	107	144	85	170	244	106	201	268
Max. Saturation Speed @ 380Vac	nmax1	[rpm]	1378	2733	3741	1475	2700	3680	1378	2757	3953	1296	2610	3465
Max. Saturation Speed @ 480Vac	nmax2	[rpm]	1741	3452	4726	1864	3420	4560	1741	3482	4993	1637	3300	4350
Max. Mechanical Speed	nmax	[rpm]	6000											
Mechanical Data (+/- 10%)														
Inertia	Jm	[kgcm²]	50			90			130			170		
Mass	M	[kg]	36			50			58			71		
Technical Data of the holding brake														
Holding Torque	MBr	[Nm]	143											
Rated Voltage	UBr	[Vdc]	24											
Rated Current 1)	IBr	[A]	1,78											
Mass	MBr	[kg]	11											
Inertia	JBr	[kgcm²]	48,6											
Additional motor length	Length	[mm]	65											
Box connection	type		B			B			B		C	B		C

For Box dimensions see page 8-9

Test Condition

1) Water inlet temperature max 20°C; Chopper frequency minimum required 4kHz

U310 Ordering Code

Example Code

U3 10 F 10 20 3 C00 B B0 1 G1 0000000

Family Code

code	description
U3	Ultract 3

code	description
10	Size 10

Cooling code	Cooling description	Stall Torque code	Stall Torque description
N	Natural cooling	04	35 Nm
		07	60 Nm
		10	88 Nm
		13	105 Nm
F	Fan cooling	04	45 Nm
		07	90 Nm
		10	130 Nm
		13	170 Nm
W	Water cooling	04	55 Nm
		07	110 Nm
		10	165 Nm
		13	220 Nm

Speed code	Speed description
10	1000 rpm
20	2000 rpm
30	3000 rpm

Voltage code	Voltage description
3	380V AC 3 phase

Option

Position Sensor code	Position Sensor description
Z00	No Sensor
R09	TS2640N101E64 Resolver 2 poles
M06	ECI 1319 EnDAT 01 EnDat 2.2
M07	ECI 1319 EnDAT 22 EnDat 2.2
N07	EQI 1331 EnDAT 21 EnDat 2.2
N08	EQI 1331 EnDAT 01 EnDat 2.2
C00	ECN 1313 EnDAT 01 EnDat 2.2
C01	ECN1325 EnDAT 22 EnDat 2.2
Q01	EQN 1325 EnDAT 01 Endat 2.1
U00	EQN 1325 EnDAT 01 Endat 2.2
U01	EQN 1337 EnDAT 01 Endat 2.2
S00	ERN 1385

Brake code	Brake description
0	No Brake
B	Brake
J	Inertia

Connector code	Connector description
A0	142x142x87.5 (M23 17 pin signal conn)
B0	175x175x106.8 (M23 17 pin signal conn)
C0	240x195x122 (M23 17 pin signal conn)
D0	353x264.5x157.5 (M23 17 pin signal conn)

ACCORDING TO MOTOR DATA

Thermal Sensor Code	Thermal Sensor Description
1	KTY84/PTC130
2	PT1000/PTC130

Shaft code	Shaft description
G1	42 x 82
K1	Key 12x8x56 and G1 shaft

Label Pos Code	Label Pos Description
0	STD Flange

Base Plate code	Base Plate description
0	NO Base Plate
B	STD U310 Baseplate

Motor Color code	Motor Color Description
0	STD Black rear cover Blu

Label Pos code	Label Pos description
0	STD Nameplate Right side

Package code	Package description
0	STD Package

Custom Documentation code	Custom Documentation description
00	STD Phasing/ Test report

U313 Models

Supported Models

U313N
U313F
U313W

U313N Models

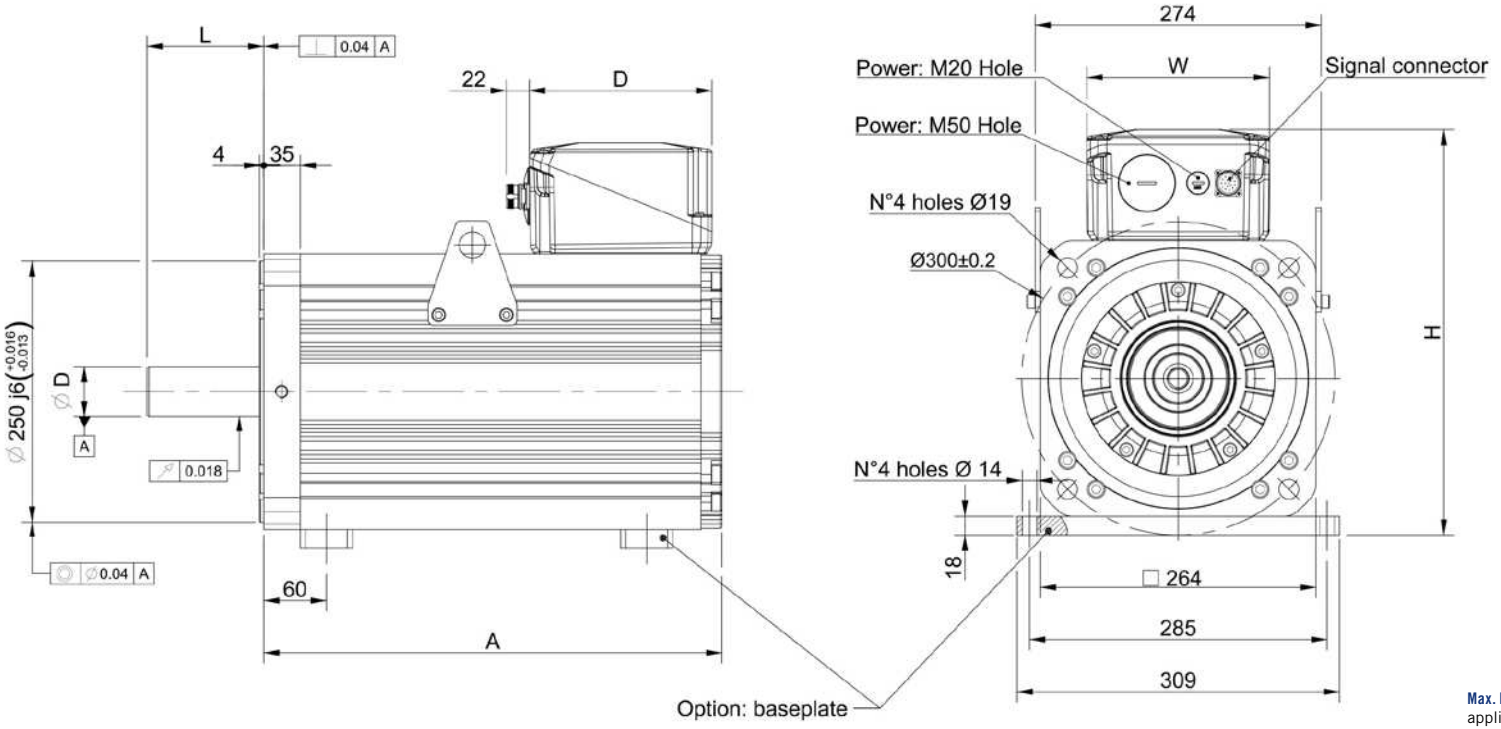

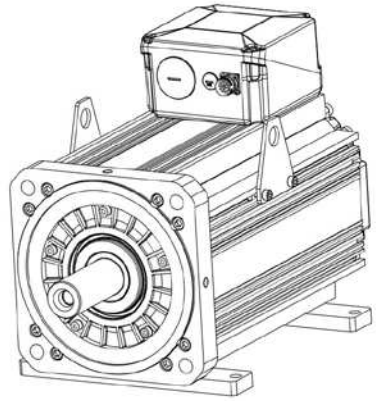

Max. Radial Load
applicable in the middle of the shaft extension

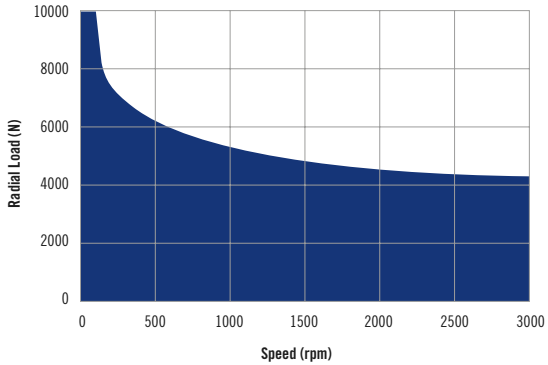

DIMENSIONS

			Shaft Dimensions	
MOTOR TYPE	**A**	**A (with brake or inertia)**	**∅ D*L [1]**	**∅ D*L with key**
U313N10	332	412	48k6*110	48k6*110
U313N20	439	519	48k6*110	48k6*110
U313N30	546	626	48k6*110	48k6*110
U313N40	653	733	48k6*110	48k6*110

1) Shaft dimension according to DIN 748-1 column (b): simultaneous transmission of torque and a know bending moment.

Natural Convection Cooling - For inverter rated Voltage 380Vac to 480Vac

Motor Type			10			20			30			40		
Rated Speed	nM	[rpm]	1000	2000	3000	1000	2000	3000	1000	2000	3000 2)	1000	2000	3000 2)
Stall Torque 1)	Md0	[Nm]	100			190			260			350		
Current @ Stall Torque 1)	Id0	[A]	20	40	60	39	69	103	54	107	161	57	142	216
Number of Poles	2p		8											
Nominal Rating														
Rated Torque 1)	MdN	[Nm]	95	87	70	170	100	50	240	180	n.a. 2)	270	130	n.a. 2)
Rated Current 1)	IdN	[A]	19	35	42	35	43	28	50	74	n.a. 2)	45	52	n.a. 2)
Rated Power	PdN	[kW]	10	18	22	18	21..6	16	25	38	n.a. 2)	29	28	n.a. 2)
Voltage Constant (+/- 10%)	Ke20°C	[Vrms/1000rpm]	343	172	114	333	179	119	333	166	111	397	159	111
Torque Constant (+/- 10%)	Kt20°C	[Nm/A]	5,68	2,84	1,89	5,50	2,96	1,97	5,50	2,75	1,84	6,55	2,62	1,84
Winding Resistance (+/- 10%)	Ru-v	[Ω]	0,800	0,200	0,090	0,300	0,076	0,339	0,196	0,049	0,022	0,160	0,026	0,015
Winding Inductance (+/- 10%)	Lu-v	[mH]	18,00	4,50	2,00	9,10	2,33	1,03	6,00	1,50	0,73	5,70	0,90	0,52
Derating Temp. Coeff. Of Back EMF	Dke/Dt	[%/°C]	-0,11											
Nominal Voltage	Vn	[V]	378	367	358	361	350	357	358	345	n.a. 2)	413	310	n.a. 2)
Minimum Flow Rate	Flow	[L/min]	n.a.											
Losses	Loss	[kW]	0,69	0,69	0,70	1,00	1,00	1,00	1,22	1,22	1,23	1,50	1,50	1,51
Efficiency	Eff	[%]	93	96	97	95	96	97	96	97	n.a. 2)	95	97	n.a. 2)
Knee Speed @ 380Vac	nknee1	[rpm]	1007	2069	3186	1055	2181	3175	1064	2203	n.a. 2)	961	2460	n.a. 2)
Knee Speed @ 480Vac	nknee2	[rpm]	1281	2622	4031	1339	3000	4030	1350	2787	n.a. 2)	1230	3211	n.a. 2)
Knee Speed 380Vac and Mmax	nknee3	[rpm]	666	1384	2101	679	1410	2140	681	1400	2006	613	1600	2083
Knee Speed 480Vac and Mmax	nknee4	[rpm]	855	1762	2668	867	1700	2720	870	1779	2543	788	2040	2640
Maximum Values														
Max. Torque	Mmax	[Nm]	280			550			830			1100		
Max. Current (peak value)	Imax	[A]	62	123	185	125	232	349	189	377	564	210	524	747
Max. Saturation Speed @ 380Vac	nmax1	[rpm]	1107	2213	3325	1143	2250	3400	1143	2286	3416	1030	2576	3416
Max. Saturation Speed @ 480Vac	nmax2	[rpm]	1398	2795	4201	1443	3100	4100	1443	2887	4315	1301	3254	4315
Max. Mechanical Speed	nmax	[rpm]	6000											
Mechanical Data (+/- 10%)														
Inertia	Jm	[kgcm²]	200			390			590			780		
Mass	M	[kg]	82			116			150			183		
Technical Data of the holding brake														
Holding Torque	MBr	[Nm]	300											
Rated Voltage (±10%)	UBr	[Vdc]	24											
Rated Current 1)	IBr	[A]	1,74											
Mass	MBr	[kg]	18											
Inertia	JBr	[kgcm²]	200											
Additional motor length	Length	[mm]	80											
Box connection	type		A	B		B		C	B		C	B	C	D

For Box dimensions see page 8-9

Test Condition
1) Motor flanged (Tflange = 30°C), to use on baseplate derate -30% of the Md0; Chopper frequency minimum required 4kHz
2) Not available in S1 duty and DT100°C

U313F Models

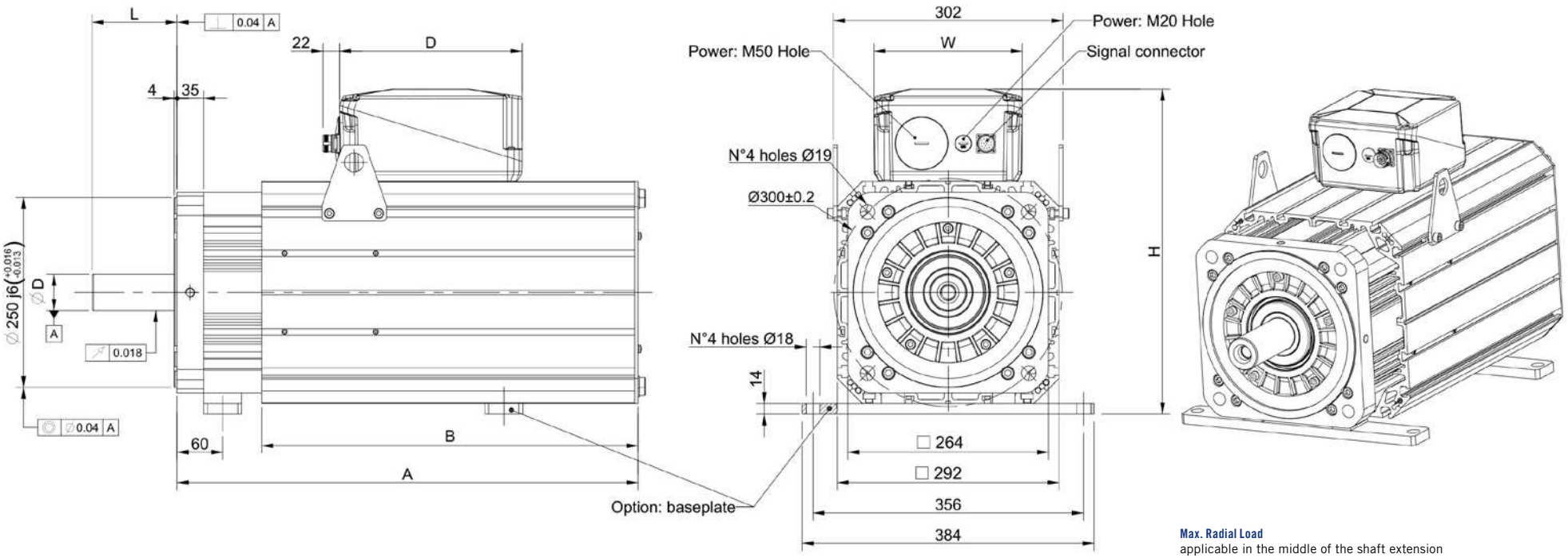

Max. Radial Load
applicable in the middle of the shaft extension

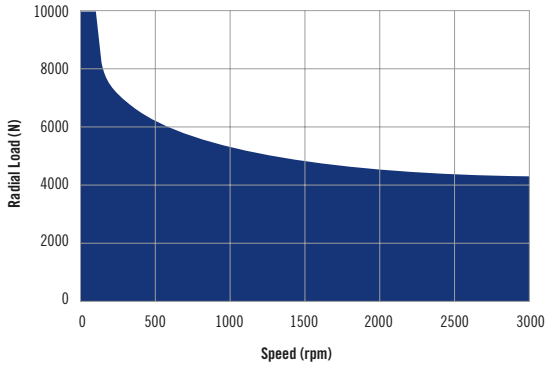

DIMENSIONS

				Shaft Dimensions	
MOTOR TYPE	**A** [1]	**A** [1] **(with brake or inertiaw)**	**B**	**Ø D*L** [2]	**Ø D*L with key**
U313F10	460	540	348	48k6*110	48k6*110
U313F20	567	647	455	48k6*110	48k6*110
U313F30	674	654	562	55m6*140	55m6*140
U313F40	781	861	669	55m6*140	55m6*140

1) Be carefully if Id0>150A + 40mm of additional lenght.
2) Shaft dimension according to DIN 748-1 column (b): simultaneous transmission of torque and a know bending moment.

Servo Fan Cooling - For inverter rated Voltage 380Vac to 480Vac

Motor Type			10			20			30			40		
Rated Speed	nM	[rpm]	1000	2000	3000	1000	2000	3000	1000	2000	3000	1000	2000	3000
Stall Torque 1)	Md0	[Nm]	150			280			410			540		
Current @ Stall Torque 1) 2)	Id0	[A]	32	63	95	61	137	182	89	178	267	132	265	351
Number of Poles	2p		8											
Nominal Rating														
Rated Torque 1)	MdN	[Nm]	145	135	130	270	260	240	400	380	350	510	480	460
Rated Current 1)	IdN	[A]	31	57	82	59	127	156	87	165	228	124	235	299
Rated Power	PdN	[kW]	15	28	41	28	54	75	42	80	110	53	100	144
Voltage Constant (+/- 10%)	Ke20°C	[Vrms/1000rpm]	343	172	114	333	148	111	333	166	111	296	148	111
Torque Constant (+/- 10%)	Kt20°C	[Nm/A]	5,68	2,84	1,89	5,50	2,44	1,84	5,50	2,75	1,84	4,90	2,44	1,84
Winding Resistance (+/- 10%)	Ru-v	[Ω]	0,800	0,200	0,090	0,300	0,058	0,033	0,196	0,049	0,022	0,105	0,026	0,015
Winding Inductance (+/- 10%)	Lu-v	[mH]	18,00	4,90	2,00	9,10	1,94	1,09	6,00	1,50	0,73	3,87	0,97	0,52
Derating Temp. Coeff. Of Back EMF	Dke/Dt	[%/°C]	-0,11											
Nominal Voltage	Vn	[V]	416	407	392	398	351	386	396	384	383	354	343	378
Minimum Flow Rate	Flow	[L/min]	n.a.											
Losses	Loss	[kW]	1,72	1,72	1,75	2,40	2,36	2,36	3,37	3,37	3,38	3,94	3,94	3,86
Efficiency	Eff	[%]	91	95	95	92	95	96	93	95	96	93	96	97
Knee Speed @ 380Vac	nknee1	[rpm]	911	1865	2903	953	2169	2957	960	1978	2973	1076	2219	3020
Knee Speed @ 480Vac	nknee2	[rpm]	1163	2367	3679	1213	2748	3743	1221	2507	3764	1367	2810	3821
Knee Speed 380Vac and Mmax	nknee3	[rpm]	666	1318	2101	679	1503	2020	681	1400	2006	740	1507	2084
Knee Speed 480Vac and Mmax	nknee4	[rpm]	855	1677	2668	867	1908	2561	870	1779	2543	943	1912	2641
Maximum Values														
Max. Torque	Mmax	[Nm]	280			550			830			1100		
Max. Current (peak value)	Imax	[A]	62	123	185	125	282	374	189	377	564	281	564	747
Max. Saturation Speed @ 380Vac	nmax1	[rpm]	1107	2213	3325	1143	2576	3416	1143	2286	3416	1283	2576	3416
Max. Saturation Speed @ 480Vac	nmax2	[rpm]	1398	2795	4201	1443	3254	4315	1443	2887	4315	1620	3254	4315
Max. Mechanical Speed	nmax	[rpm]	6000											
Mechanical Data (+/- 10%)														
Inertia	Jm	[kgcm²]	200			390			590			780		
Mass	M	[kg]	99			138			177			211		
Technical Data of the holding brake														
Holding Torque	MBr	[Nm]	300											
Rated Voltage	UBr	[Vdc]	24											
Rated Current 1)	IBr	[A]	1,74											
Mass	MBr	[kg]	18											
Inertia	JBr	[kgcm²]	200											
Additional motor length	Length	[mm]	80											
Box connection	type		B			B	C		B	C		C		D

For Box dimensions see page 8-9

Test Condition
1) Motor tested in horizontal position in free still air, ambient temperature 30°C; Chopper frequency minimum required 4kHz
2) If Id0 >= 150A: + 40mm of addtional lenght

U313W Models

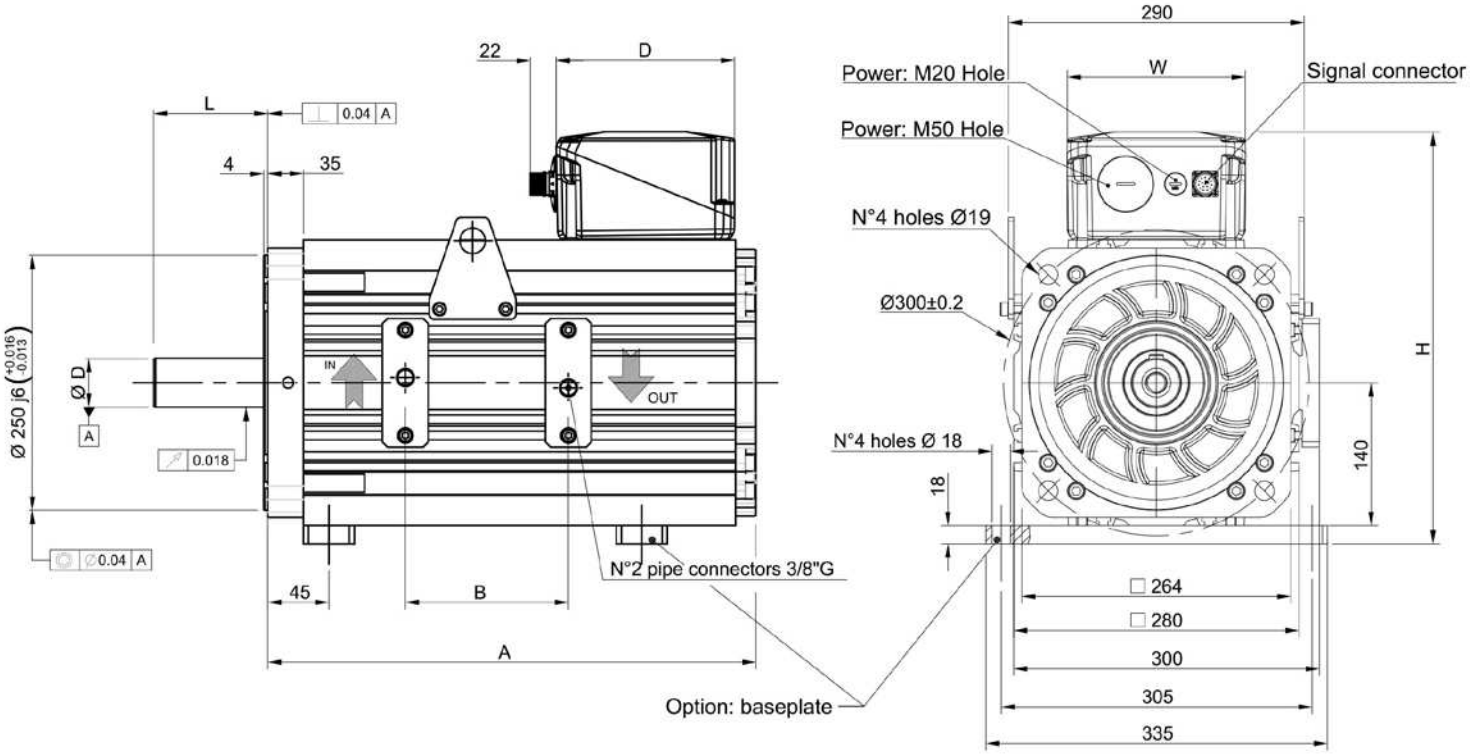

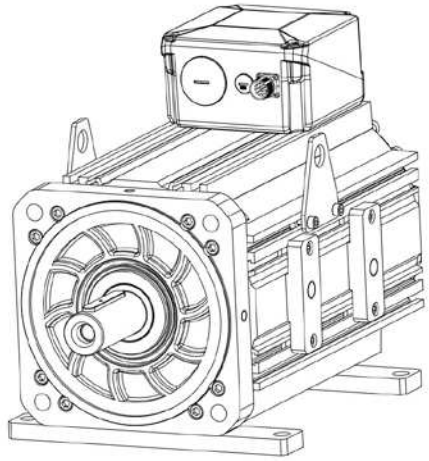

DIMENSIONS

MOTOR TYPE	A [1]	A [1] (with brake or inertiaw)	B	Shaft Dimensions	
				Ø D*L [2]	Ø D*L with key
U313W10	332	412	75	48k6*110	48k6*110
U313W20	439	519	170	48k6*110	48k6*110
U313W30	546	536	279	60m6*140	60m6*140
U313W40	653	733	385	60m6*140	60m6*140

1) Be carefully if Id0>150A + 40mm of additional lenght.
2) Shaft dimension according to DIN 748-1 column (b): simultaneous transmission of torque and a know bending moment.

Max. Radial Load
applicable in the middle of the shaft extension

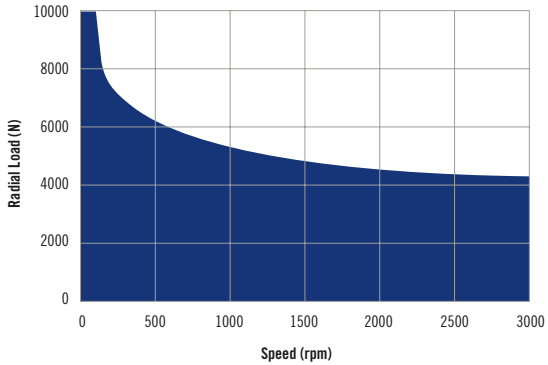

Water Cooling - For inverter rated Voltage 380Vac to 480Vac

Motor Type			10			20			30			40		
Rated Speed	nM	[rpm]	1000	2000	3000	1000	2000	3000	1000	2000	3000	1000	2000	3000
Stall Torque 1)	Md0	[Nm]	180			360			540			720		
Current @ Stall Torque 1) 2)	Id0	[A]	41	77	124	80	160	248	128	254	326	154	320	411
Number of Poles	2p		8											
Nominal Rating														
Rated Torque 1)	MdN	[Nm]	179	178	175	357	353	348	539	530	520	715	710	700
Rated Current 1)	IdN	[A]	41	77	120	79	157	238	128	250	315	153	315	402
Rated Power	PdN	[kW]	19	37	55	37	74	109	56	111	164	75	149	219
Voltage Constant (+/- 10%)	Ke20°C	[Vrms/1000rpm]	287	157	98	296	148	98	277	139	113	316	148	119
Torque Constant (+/- 10%)	Kt20°C	[Nm/A]	4,74	2,60	1,62	4,89	2,44	1,62	4,58	2,30	1,87	5,20	2,44	1,96
Winding Resistance (+/- 10%)	Ru-v	[Ω]	0,560	0,156	0,061	0,243	0,060	0,024	0,135	0,034	0,205	0,100	0,026	0,014
Winding Inductance (+/- 10%)	Lu-v	[mH]	12,50	4,29	1,67	7,10	1,80	0,72	4,20	1,05	0,68	3,65	0,97	0,51
Derating Temp. Coeff. Of Back EMF	Dke/Dt	[%/°C]	-0,11											
Nominal Voltage	Vn	[V]	358	380	350	373	366	330	351	343	460	364	375	424
Motor Loss @ Nominal Power	Loss	[kW]	2,05	2,04	2,07	3,34	3,31	3,10	4,76	4,75	4,80	5,52	5,63	5,63
Minimum Flow Rate	Flow	[L/min]	5			8			11			14		
Efficiency	Eff	[%]	86	94	96	92	96	97	92	96	97	94	96	97
Knee Speed @ 380Vac	nknee1	[rpm]	1064	1933	3153	1020	2079	3344	1087	2220	2815	1006	2029	2780
Knee Speed @ 480Vac	nknee2	[rpm]	1357	2463	4025	1299	2636	4270	1383	2813	3590	1283	2570	3525
Knee Speed 380Vac and Mmax	nknee3	[rpm]	809	1418	2306	773	1573	2570	821	1681	2130	775	1507	2150
Knee Speed 480Vac and Mmax	nknee4	[rpm]	1036	1808	2930	987	1997	3260	1047	2134	2700	990	1912	2730
Maximum Values														
Max. Torque	Mmax	[Nm]	280			550			830			1100		
Max. Current (peak value)	Imax	[A]	74	135	215	141	282	423	227	451	554	265	564	707
Max. Saturation Speed @ 380Vac	nmax1	[rpm]	1326	2520	4100	1285	2576	4100	1372	2733	3550	1300	2576	3350
Max. Saturation Speed @ 480Vac	nmax2	[rpm]	1675	3240	5160	1624	3254	5160	1733	3452	4500	1600	3254	4300
Max. Mechanical Speed	nmax	[rpm]	6000											
Mechanical Data (+/- 10%)														
Inertia	Jm	[kgcm²]	200			390			590			780		
Mass	M	[kg]	83			117			151			183		
Technical Data of the holding brake														
Holding Torque	MBr	[Nm]	300											
Rated Voltage	UBr	[Vdc]	24											
Rated Current 1)	IBr	[A]	1,74											
Mass	MBr	[kg]	18											
Inertia	JBr	[kgcm²]	200											
Additional motor length	Length	[mm]	80											
Box connection	type		B		C	B	C		C		D	C	D	

For Box dimensions see page 8-9

Test Condition
1) Water inlet temperature max 20°C; Chopper frequency minimum required 4kHz
2) If Id0 >= 150: + 40mm of addtional length

U313 Ordering Code

Example Code

U3 13 N 10 30 3 S00 0 B0 1 G1 0B00000

Family Code

code	description
U3	Ultract 3

code	description
13	Size 13

Cooling code	Cooling description	Stall Torque code	Stall Torque description	Speed code	Speed description	Voltage code	Voltage description
N	Natural cooling	10	100 Nm	10	1000rpm	3	380V AC 3 phase
		20	190 Nm	20	2000rpm		
		30	260 Nm	30	3000rpm		
		40	350 Nm				
F	Fan cooling	10	150 Nm				
		20	280 Nm				
		30	410 Nm				
		40	540 Nm				
W	Water cooling	10	180 Nm				
		20	360 Nm				
		30	540 Nm				
		40	720 Nm				

Option

Position Sensor code	Position Sensor description
Z00	No Sensor
R09	TS2640N101E64 Resolver 2 poles
M06	ECI 1319 EnDAT 01 EnDat 2.2
M07	ECI 1319 EnDAT 22 EnDat 2.2
N07	EQI 1331 EnDAT 21 EnDat 2.2
N08	EQI 1331 EnDAT 01 EnDat 2.2
C00	ECN 1313 EnDAT 01 EnDat 2.2
C01	ECN1325 EnDAT 22 EnDat 2.2
Q01	EQN 1325 EnDAT 01 Endat 2.1
U00	EQN 1325 EnDAT 01 Endat 2.2
U01	EQN 1337 EnDAT 01 Endat 2.2
S00	ERN 1385

Brake code	Brake description
0	No Brake
B	Brake
J	Inertia

Connector code	Connector description
A0	142x142x87.5 (M23 17 pin signal conn)
B0	175x175x106.8 (M23 17 pin signal conn)
C0	240x195x122 (M23 17 pin signal conn)
D0	353x264.5x157.5 (M23 17 pin signal conn)

ACCORDING TO MOTOR DATA

Thermal Sensor Code	Thermal Sensor Description
1	KTY84/PTC130
2	PT1000/PTC130

Shaft code	Shaft description
G1	48 x 110
	Only available for: N10, N20, N30, N40, F10, F20, W10, W20
G2	55 x 140
	Only available for: F30, F40
G3	60 x 140
	Only available for: W30, W40
K1	Key 14x9x90 and G1 shaft
K2	Key 16x10x110 and G2 shaft
K3	Key 18x11x125 and G3 shaft

Label Pos Code	Label Pos Description
0	STD Flange

Base Plate code	Base Plate description
0	NO Base Plate
B	STD U13 Baseplate

Motor Color code	Motor Color Description
0	STD Black rear cover Blu

Label Pos code	Label Pos description
0	STD Nameplate Right side

Package code	Package description
0	STD Package

Custom Documentation code	Custom Documentation description
00	STD Phasing/ Test report

U318 Models

Supported Models

U318N
U318F
U318W

U318N Models

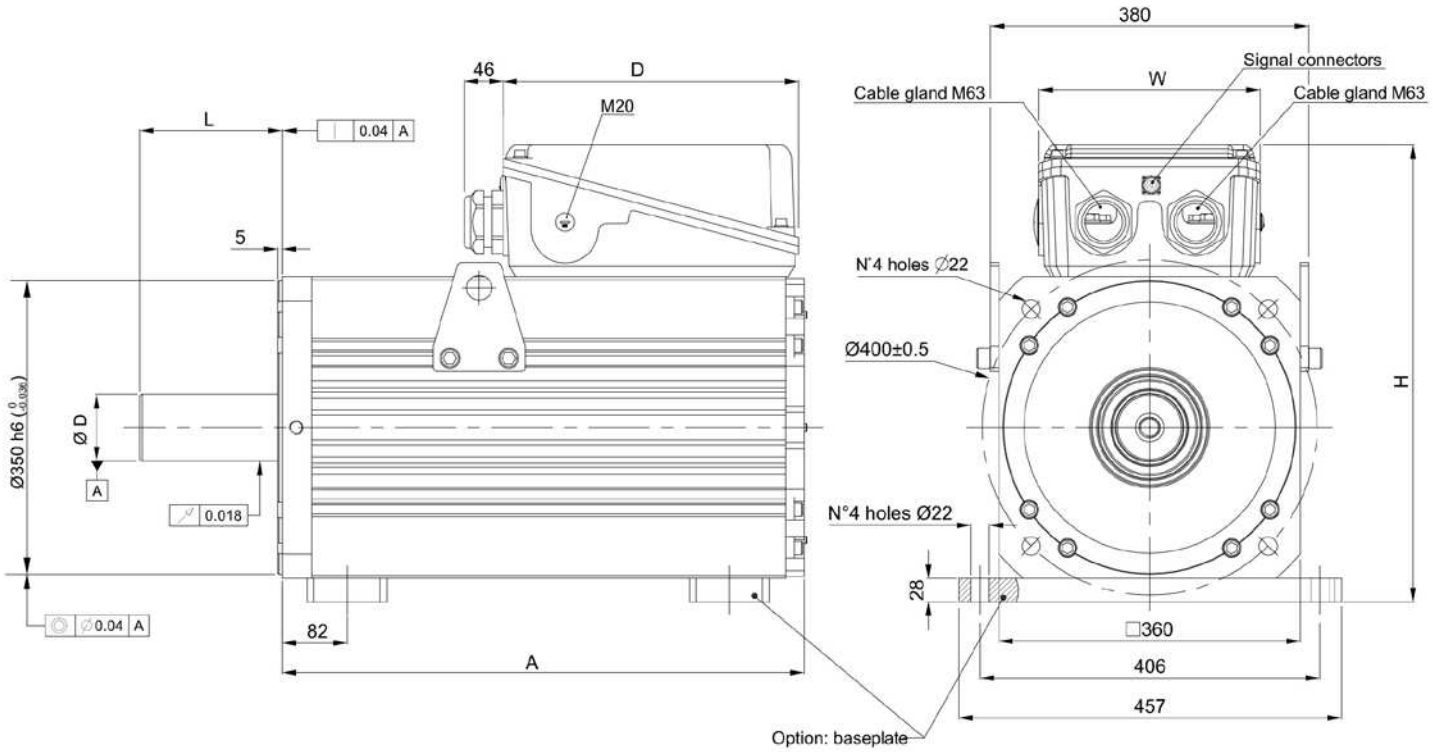

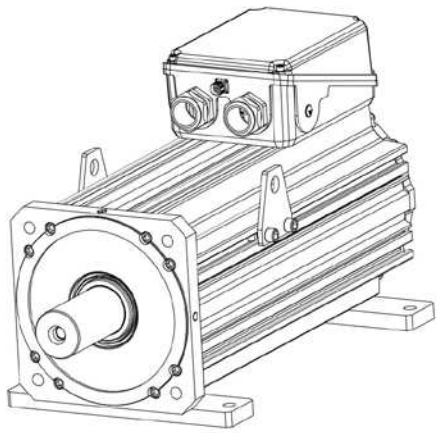

Max. Radial Load
applicable in the middle of the shaft extension

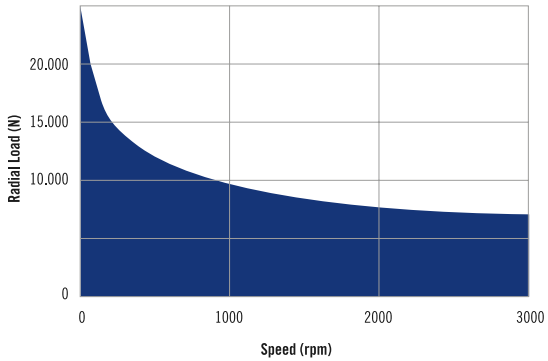

DIMENSIONS

		Shaft Dimensions	
MOTOR TYPE	**A**	**∅ D*L** [1]	**∅ D*L with key**
U318N35	515	60m6*140	60m6*140
U318N70	707	60m6*140	60m6*140
U318N100	835	60m6*140	60m6*140

1) Shaft dimension according to DIN 748-1 column (b): simultaneous transmission of torque and a know bending moment.

Natural Convection Cooling - For inverter rated Voltage 380Vac to 480Vac

Motor Type			35		70		100	
Rated Speed	nM	[rpm]	1000	2000	1000	2000	1000	2000
Stall Torque 1)	Md0	[Nm]	300		560		730	
Current @ Stall Torque 1)	Id0	[A]	53	106	99	197	145	290
Number of Poles	2p		12					
Nominal Rating								
Rated Torque 1)	MdN	[Nm]	200	n.a. 2)	300	n.a. 2)	290	n.a. 2)
Rated Current 1)	IdN	[A]	35	n.a. 2)	53	n.a. 2)	57	n.a. 2)
Rated Power	PdN	[kW]	21	n.a. 2)	31	n.a. 2)	30	n.a. 2)
Voltage Constant (+/- 10%)	Ke20°C	[Vrms/1000rpm]	390	195	390	195	347	173
Torque Constant (+/- 10%)	Kt20°C	[Nm/A]	6,45	3,23	6,45	3,23	5,74	2,86
Winding Resistance (+/- 10%)	Ru-v	[Ω]	0,16	0,042	0,059	0,015	0,032	0,009
Winding Inductance (+/- 10%)	Lu-v	[mH]	2,2	0,55	1,1	0,28	0,65	0,16
Derating Temp. Coeff. Of Back EMF	Dke/Dt	[%/°C]	-0,11					
Nominal Voltage	Vn	[V]	396	n.a. 2)	393	n.a. 2)	349	n.a. 2)
Minimum Flow Rate	Flow	[L/min]	n.a.					
Losses	Loss	[kW]	0,97	1,01	1,24	1,26	1,44	1,63
Efficiency	Eff	[%]	95	94	94	94	95	95
Knee Speed @ 380Vac	nknee1	[rpm]	959	n.a. 2)	966	n.a. 2)	1090	n.a. 2)
Knee Speed @ 480Vac	nknee2	[rpm]	1215	n.a. 2)	1222	n.a. 2)	1378	n.a. 2)
Knee Speed 380Vac and Mmax	nknee3	[rpm]	795	1658	822	1688	924	1900
Knee Speed 480Vac and Mmax	nknee4	[rpm]	1023	2114	1052	2146	1180	2414
Maximum Values								
Max. Torque	Mmax	[Nm]	1300		2500		3500	
Max. Current (peak value)	Imax	[A]	252	504	484	969	762	1529
Max. Saturation Speed @ 380Vac	nmax1	[rpm]	974	1949	974	1949	1095	2197
Max. Saturation Speed @ 480Vac	nmax2	[rpm]	1231	2462	1231	2462	1383	2775
Max. Mechanical Speed	nmax	[rpm]	4000					
Mechanical Data (+/- 10%)								
Inertia	Jm	[kgcm²]	2820		5340		7010	
Mass	M	[kg]	290		360		431	
Technical Data of the holding brake								
Holding Torque	MBr	[Nm]	n.a.					
Rated Voltage (±10%)	UBr	[Vdc]	n.a.					
Rated Current 1)	IBr	[A]	n.a.					
Mass	MBr	[kg]	n.a.					
Inertia	JBr	[kgcm²]	n.a.					
Additional motor length	Length	[mm]	n.a.					
Box connection	Type		D		D		D	

For Box dimensions see page 8-9

Test Condition
1) Motor flanged (Tflange = 30°C), to use on baseplate derate -30% of the Md0; Chopper frequency minimum required 4kHz
2) Not available in S1 duty and DT100°C

U318F Models

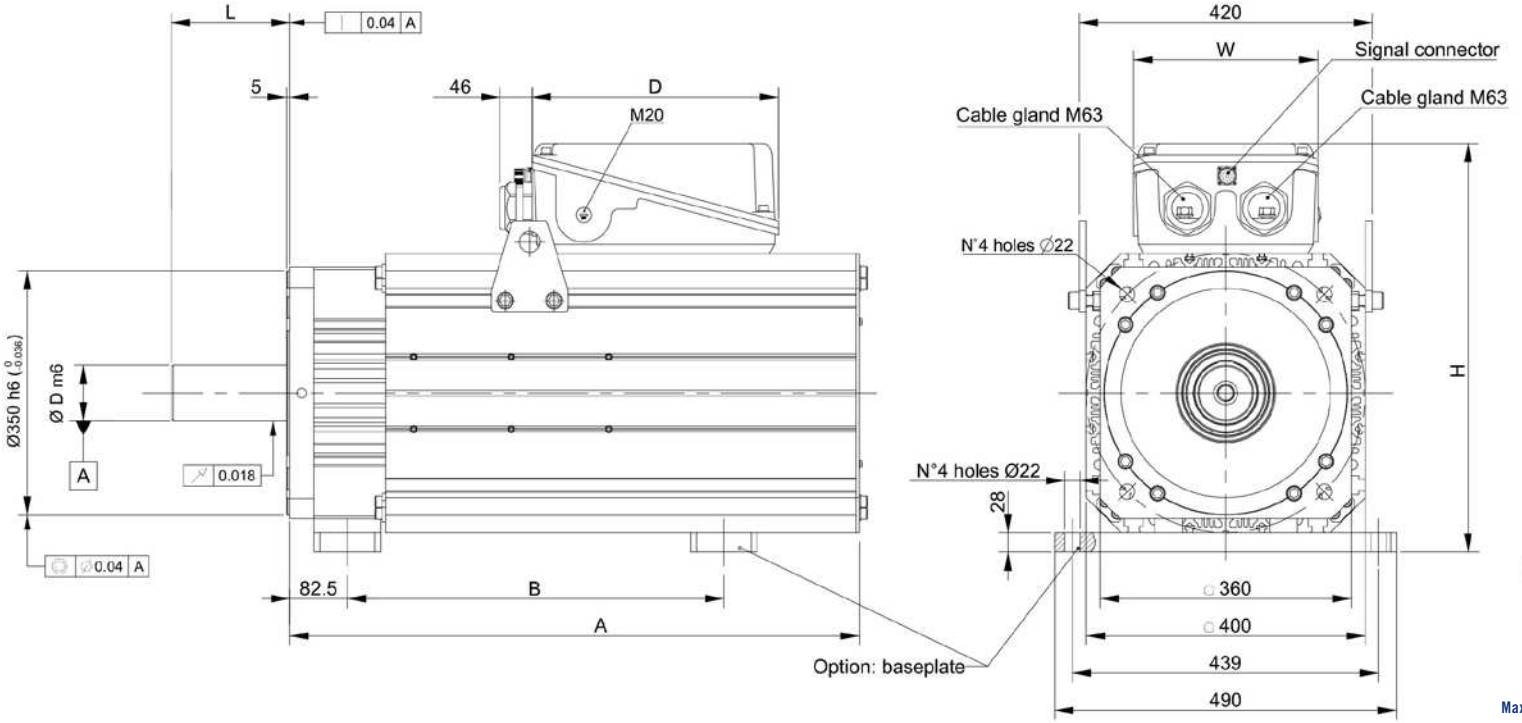

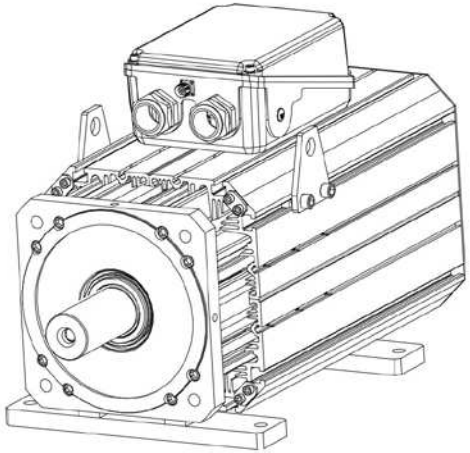

Max. Radial Load
applicable in the middle of the shaft extension

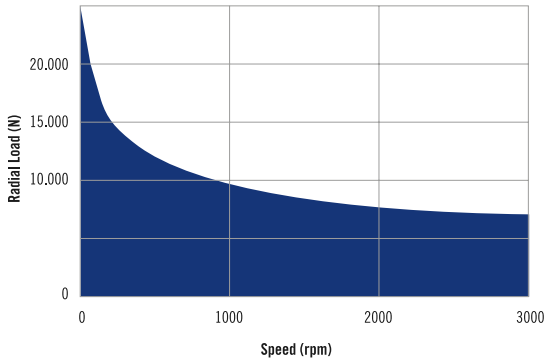

DIMENSIONS

			Shaft Dimensions	
MOTOR TYPE	**A**	**B**	**Ø D*L** [1]	**Ø D*L with key**
U318F35	700	348	60*140	60*140
U318F70	892	540	80*170	80*170
U318F100	1020	668	80*170	80*170

1) Shaft dimension according to DIN 748-1 column (b): simultaneous transmission of torque and a know bending moment.

Servo Fan Cooling - For inverter rated Voltage 380Vac to 480Vac

Motor Type			35		70		100	
Rated Speed	nM	[rpm]	1000	2000	1000	2000	1000	2000
Stall Torque 1)	Md0	[Nm]	500		1000		1270	
Current @ Stall Torque 1)	Id0	[A]	88	176	176	352	251	504
Number of Poles	2p		12					
Nominal Rating								
Rated Torque 1)	MdN	[Nm]	520	420	890	790	1150	900
Rated Current 1)	IdN	[A]	92	148	157	278	228	357
Rated Power	PdN	[kW]	54	88	93	165	120	188
Voltage Constant (+/- 10%)	Ke20°C	[Vrms/1000rpm]	390	195	390	195	347	173
Torque Constant (+/- 10%)	Kt20°C	[Nm/A]	6,45	3,23	6,45	3,23	5,74	2,86
Winding Resistance (+/- 10%)	Ru-v	[Ω]	0,16	0,042	0,059	0,015	0,032	0,009
Winding Inductance (+/- 10%)	Lu-v	[mH]	2,2	0,55	1,1	0,28	0,65	0,27
Derating Temp. Coeff. Of Back EMF	Dke/Dt	[%/°C]	-0,11					
Nominal Voltage	Vn	[V]	409	400	403	398	357	356
Minimum Flow Rate	Flow	[L/min]	n.a.					
Losses	Loss	[kW]	2,68	2,82	3,96	4,02	4,37	4,95
Efficiency	Eff	[%]	95	94	94	94	95	95
Knee Speed @ 380Vac	nknee1	[rpm]	926	1900	942	1910	1064	2137
Knee Speed @ 480Vac	nknee2	[rpm]	1178	2407	1195	2418	1349	2704
Knee Speed 380Vac and Mmax	nknee3	[rpm]	795	1658	822	1688	924	1621
Knee Speed 480Vac and Mmax	nknee4	[rpm]	1023	2114	1052	2146	1180	2058
Maximum Values								
Max. Torque	Mmax	[Nm]	1300		2500		3500	
Max. Current (peak value)	Imax	[A]	252	504	484	969	762	1529
Max. Saturation Speed @ 380Vac	nmax1	[rpm]	974	1949	974	1949	1095	2197
Max. Saturation Speed @ 480Vac	nmax2	[rpm]	1231	2462	1231	2462	1383	2775
Max. Mechanical Speed	nmax	[rpm]	4000					
Mechanical Data (+/- 10%)								
Inertia	Jm	[kgcm²]	2820		5340		7010	
Mass	M	[kg]	325		388		466	
Technical Data of the holding brake								
Holding Torque	MBr	[Nm]	n.a.					
Rated Voltage (±10%)	UBr	[Vdc]	n.a.					
Rated Current 1)	IBr	[A]	n.a.					
Mass	MBr	[kg]	n.a.					
Inertia	JBr	[kgcm²]	n.a.					
Additional motor length	Length	[mm]	n.a.					
Box connection	Type		D		D		D	

For Box dimensions see page 8-9

Test Condition
1) Motor tested in horizontal position in free still air, ambient temperature 30°C; Chopper frequency minimum required 4kHz
2) Not available in S1 duty and DT100°C

U318W Models

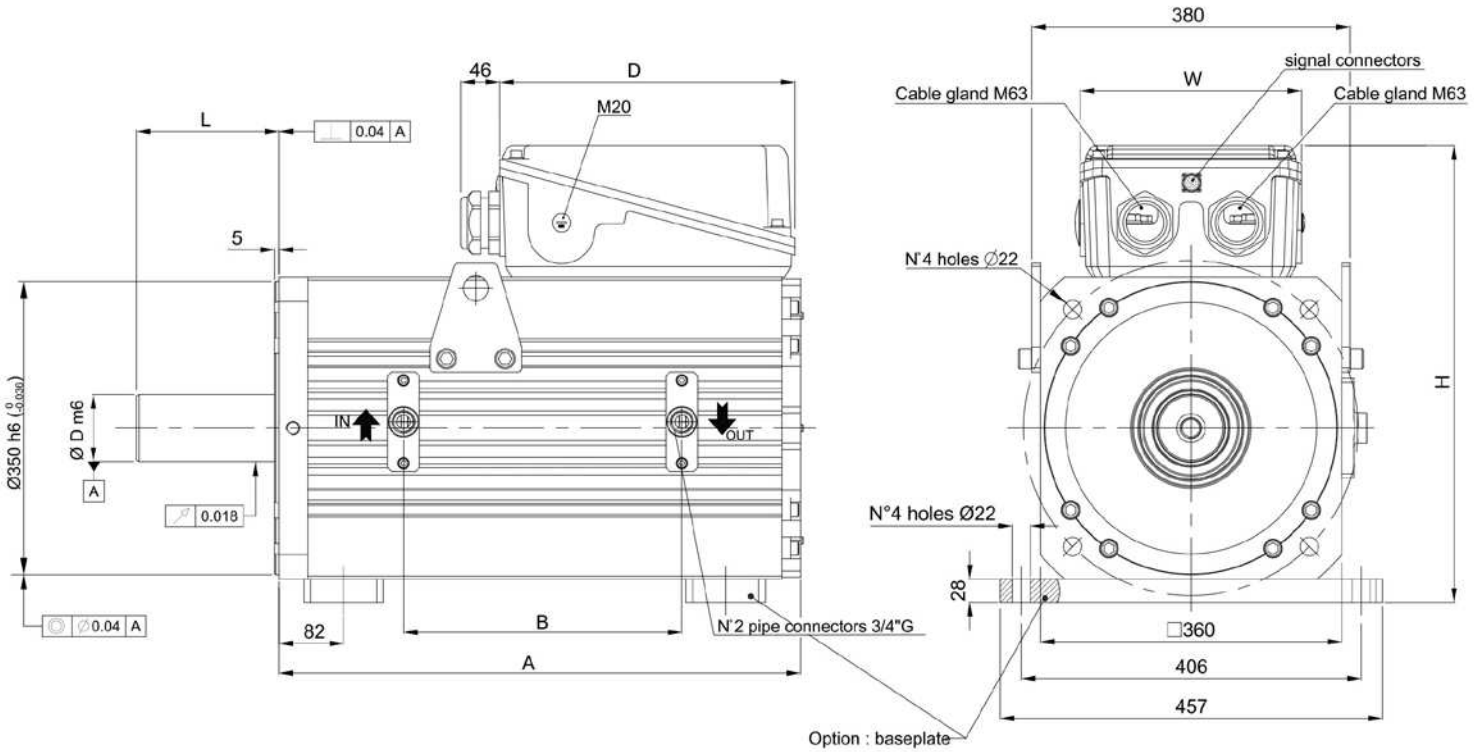

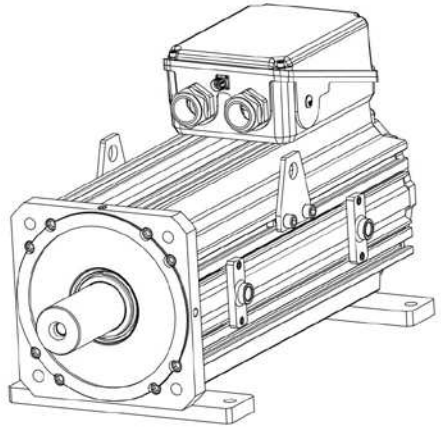

Max. Radial Load
applicable in the middle of the shaft extension

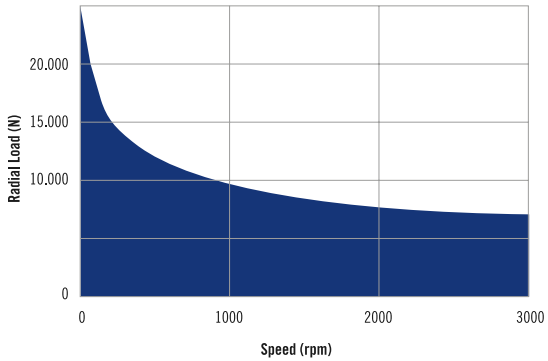

DIMENSIONS

			Shaft Dimensions	
MOTOR TYPE	**A**	**B**	**∅ D*L** [1]	**∅ D*L with key**
U318W35	515	155	60*140	60*140
U318W70	707	347	80*170	80*170
U318W100	835	475	80*170	80*170

1) Shaft dimension according to DIN 748-1 column (b): simultaneous transmission of torque and a know bending moment.

Water Cooling - For inverter rated Voltage 380Vac to 480Vac

Motor Type			35		70		100	
Rated Speed	nM	[rpm]	1000	2000	1000	2000	1000	2000
Stall Torque 1)	Md0	[Nm]	550		1100		1600	
Current @ Stall Torque 1)	Id0	[A]	97	194	194	388	317	635
Number of Poles	2p		12					
Nominal Rating								
Rated Torque 1)	MdN	[Nm]	500	497	1000	980	1540	1480
Rated Current 1)	IdN	[A]	88	175	176	345	305	588
Rated Power	PdN	[kW]	52	104	105	205	161	310
Voltage Constant (+/- 10%)	Ke20°C	[Vrms/1000rpm]	390	195	390	195	347	173
Torque Constant (+/- 10%)	Kt20°C	[Nm/A]	6,45	3,23	6,45	3,23	5,74	2,86
Winding Resistance (+/- 10%)	Ru-v	[Ω]	0,16	0,042	0,059	0,015	0,032	0,009
Winding Inductance (+/- 10%)	Lu-v	[mH]	2,2	0,55	1,1	0,45	1,04	0,27
Derating Temp. Coeff. Of Back EMF	Dke/Dt	[%/°C]	-0,11					
Nominal Voltage	Vn	[V]	408	402	405	410	374	369
Minimum Flow Rate	Flow	[L/min]	n.a.					
Losses	Loss	[kW]	3,24	3,41	4,79	4,87	6,94	7,85
Efficiency	Eff	[%]	95	95	94	94	95	95
Knee Speed @ 380Vac	nknee1	[rpm]	929	1887	937	1851	1018	2060
Knee Speed @ 480Vac	nknee2	[rpm]	1181	2391	1189	2344	1291	2609
Knee Speed 380Vac and Mmax	nknee3	[rpm]	795	1658	822	1475	807	1621
Knee Speed 480Vac and Mmax	nknee4	[rpm]	1023	2114	1052	1873	1029	2058
Maximum Values								
Max. Torque	Mmax	[Nm]	1300		2500		3500	
Max. Current (peak value)	Imax	[A]	252	504	484	969	762	1529
Max. Saturation Speed @ 380Vac	nmax1	[rpm]	974	1949	974	1949	1095	2197
Max. Saturation Speed @ 480Vac	nmax2	[rpm]	1231	2462	1231	2462	1383	2775
Max. Mechanical Speed	nmax	[rpm]	4000					
Mechanical Data (+/- 10%)								
Inertia	Jm	[kgcm²]	2820		5340		7010	
Mass	M	[kg]	290		360		431	
Technical Data of the holding brake								
Holding Torque	MBr	[Nm]	n.a.					
Rated Voltage (±10%)	UBr	[Vdc]	n.a.					
Rated Current 1)	IBr	[A]	n.a.					
Mass	MBr	[kg]	n.a.					
Inertia	JBr	[kgcm²]	n.a.					
Additional motor length	Length	[mm]	n.a.					
Box connection	Type		D		D		D	

For Box dimensions see page 8-9

Test Condition
1) Test Conditions:Motor tested in horizontal position in free still air, ambient temperature 30°C; Chopper frequency minimum required 4kHz
2) Not available in S1 duty and DT100°C

U318 Ordering Code

Example Code

U3 18 N 70 10 3 R09 0 D0 1 G2 0B00000

Family Code

Name				Cooling		Stall Torque		Speed		Voltage	
code	description	code	description	code	description	code	description	code	description	code	description
U3	Ultract 3	18	Size 18	N	Natural Cooling	35	300 Nm	10	1000 rpm	3	380V AC 3 phase
						70	560 Nm	20	2000 rpm		
						100	730 Nm				
				F	Fan Cooling	35	500 Nm				
						70	1000 Nm				
						100	1270 Nm				
				W	Water Cooling	35	550 Nm				
						70	1100 Nm				
						100	1600 Nm				

Option

Position Sensor		Brake		Connector		Thermal Sensor		Shaft		Label Pos		Base Plate		Motor Color		Label Pos		Package		Custom Documentation	
code	description	code	description	code	description	code	Description	code	description	code	description	code	description	code	description	code	description	code	description	code	description
Z00	No Sensor	0	No Brake	D0	353x264.5x157.5 (M23 17 pin signal conn)	1	KTY84/PTC130	G1	60 x 140	0	STD Flange	0	NO Base Plate	0	STD Black rear cover Blu	0	STD Nameplate Right side	0	STD Package	00	STD Phasing/ Test report
R09	TS2640N101E64 Resolver 2 poles	J	Inertia			2	PT1000/PTC130		**Only available for:** N35, N70, N100, F35, W35			B	STD U18 Baseplate								
M06	ECI 1319 EnDAT 01 EnDat 2.2																				
M07	ECI 1319 EnDAT 22 EnDat 2.2				ACCORDING TO MOTOR DATA			G2	80 x170												
N07	EQI 1331 EnDAT 21 EnDat 2.2								**Only available for:** F70, F100, W70, W100												
N08	EQI 1331 EnDAT 01 EnDat 2.2																				
C00	ECN 1313 EnDAT 01 EnDat 2.2							K1	Key 18x11x125 and G1 shaft												
C01	ECN1325 EnDAT 22 EnDat 2.2							K2	Key 22x14x140 and G2 shaft												
Q01	EQN 1325 EnDAT 01 Endat 2.1																				
U00	EQN 1325 EnDAT 01 Endat 2.2																				
U01	EQN 1337 EnDAT 01 Endat 2.2																				
S00	ERN 1385																				

Name Plate

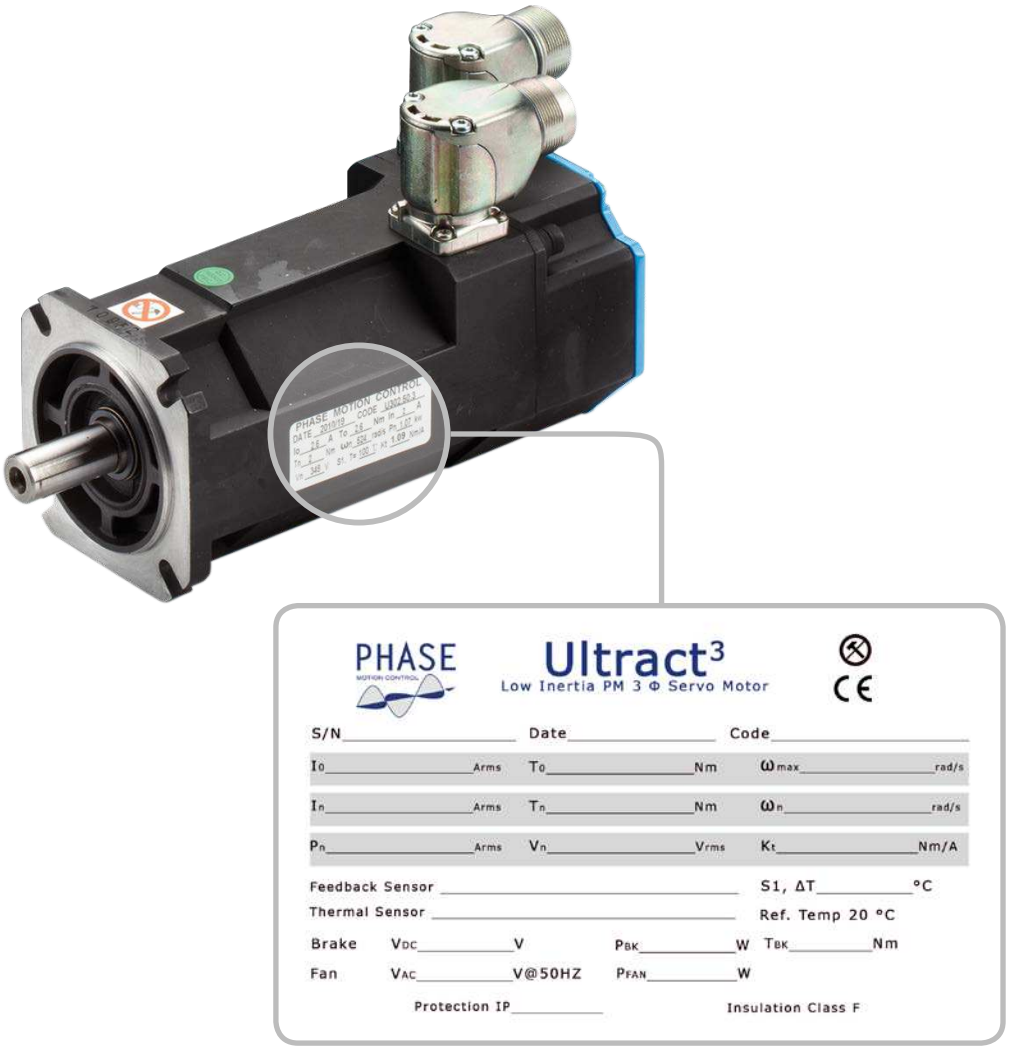

Description	Catalog		Name plate	
Current @ Stall Torque	IdO	[A]	I_0	[A_{rms}]
Rated Current	IdN	[A]	I_n	[A_{rms}]
Rated Power	PdN	[kW]	P_n	[kW]
Stall Torque	MdO	[Nm]	T_0	[Nm]
Rated Torque	Mdn	[Nm]	T_n	[Nm]
Nominal Voltage	Vn	[V]	V_n	[V_{rms}]
Max Mechanical Speed	nmax	[rpm]	ω_{max}	[rad/s]
Rated Speed	nM	[rpm]	ω_n	[rad/s]
Torque Constant	Kt	[Nm/A]	K_t	[Nm/A]
Feedback sensor	According to Sensors at page 5			
S_1,ΔT	Temperature rise for S_1 calculation with $T_{copper\ max}$ = 130°			
Thermal Sensor	PTC 130 and KTY 84-130			
Rated Voltage (±10%)	Ubr	[Vdc]	Brake VDC	[V]
Brake Power	-	-	PBK	[W]
Holding Torque	Mbr	[Nm]	TBK	[Nm]
Fan Voltage (±10%)	-	-	Fan VAC	V@50Hz
Fan Power	-	-	PFAN	[W]

U3 Motor Assembly

Mechanical Coupling without Keyway.
A rigid mechanical coupling to the shaft, free from angular backlash, is mandatory to ensure fast system dynamics.
An interface fastening is recommended, e.g. Ringblocks (1) clamps.
JOINTS: Use only joints with high angular stiffness (steel bellows), e.g. Rodoflex (2) or Gerwah (3).
Gearboxes: IP65 motor version, with shaft lip seal, is recommended for coupling to oil filled gearboxes.
Caution: screw type gearboxes are not adeguate for low speed applications.

Accuracy to DIN 42955 - IEC 72, reduced tolerance

Flange to shaft perpendicularity
TOL1 = 0,040 mm.
Flange to shaft concentricity
TOL2 = 0,040 mm.
Shaft run out
TOL3 = 0,018 mm.

Instant motor torque is
T0 = KT*I
where I is the r.m.s. supplied by the drive

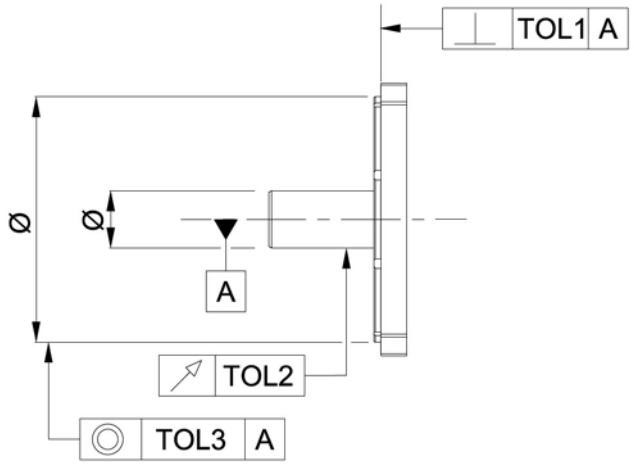

Option “K”

ØD1 [mm]	Toll.	L1 [mm]	L2 [mm]	L3 [mm]	B1 [mm]	H1 [mm]	Key type B1 x h (DIN 6885)
14	j6	30	6	16	5	16.5	5 x 5
19		40	5	28	6	21.5	6 x 6
24		50	7.5	32	8	27	8 x 7
28		60	7.5	40	8	31	8 x 7
32	k6	60	7.5	40	10	35	10 x 8
42		80	9	56	12	45	12 x 8
45		80	10	56	14	48.5	14 x 9
48		110	10	90	14	51.5	14 x 9
50		110	10	90	14	53.5	14 x 9
55	m6	140	10	110	16	59	16 x 10
60		140	10	125	18	64	18 x 11
70		140	10	125	20	74.5	20 x 12
80			10	140	22	85.4	22 x 14
90		170	10	140	25	95.4	25 x 14

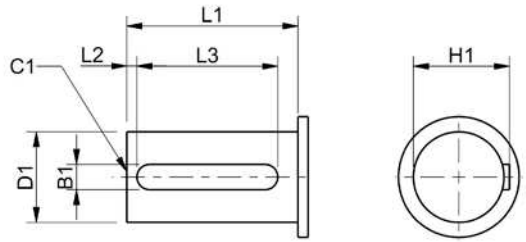

Shaft with key

Application Guidelines

Forward

AC brushless servo drive systems, based on rare earth PM magnets, provide the highest level of dynamic performance and torque density available today. The trend to replace conventional hydraulic, DC, stepper or inverter driven AC drives with brushless drives yields to a new level of system performance, in terms of shorter cycle times, higher productivity, improved accuracy coupled with shorter settling times, increased reliability and longer life. In order to achieve the steep performance improvement which is feasible with the new motors, however, a good understanding of the characteristics of this technology is a prerequisite. In fact, just replacing a conventional motor with a new technology drive on a machine not designed for high speed control could result in unexpected problems and at times even in a deterioration of the machine operability.
These application guidelines were designed to provide a basic tool for the optimization of new applications without prior knowledge of these new drives. For applications where the performance or the motor stress is perceived to be critical, or where a full optimization could be beneficial, contact the Factory.

Drive and Mechanical Linkage Selection

The success of all drive applications dictate a careful selection of the complete system parameters. This in turn is based on a good understanding of the capabilities, which are very high but often not fully understood, of modern brushless drive systems. In fact, brushless drives are not motors, but complete, and complex, control systems; this results in more degrees of design freedom, and more parameters to select, than a conventional drive. From a conceptual viewpoint, a high performance brushless motor is more similar to the membrane of a loudspeaker than to a standard induction motor. Just as a loudspeaker, the motor has a very short response time, limited inertia, and therefore it faithfully copies the control signal, whatever it may be. Just like a loudspeaker, the quality of the result depends more on the system parameters and drive conditions than on the motor itself. The design choices facing the system designer are thus at the same time mechanical, electric and electronic, and such choices are interwoven, requiring an interdisciplinary approach.
In particular, all systems require two fundamental selections:

» mechanical level: choice of the mechanical linkage, of the transmission ratio, of the motion type conversion, of the couplings and clutches;
» electronic level: Feedback strategy, sensor type and number selection, sensor placement, amplifier type, synchronization and control bus.

The next chapters outline a few guidelines to help with the selection as a function of the application characteristics.

The Brushless Drive:Operational Principles, Characteristics and Limitations

All brushless servo systems consist of an electronic drive, a servo motor, and at least one feedback sensor. All these component operate in a control loop: the drive accepts a reference from the outside world, and feeds current to the motor. The motor is a torque transducer and applies torque to the load. The load reacts, or accelerates, according to its own characteristics. The sensor measures the load position, enabling the drive to compare the motion with the reference and to change the motor current to force the motion to copy the reference.
As an example, if constant speed is required, the drive would increase the current to the motor until the motor speed equals the reference. If the load is suddenly stepped up,

the speed diminishes; the sensor detects the speed change and consequently the drive increases the motor torque to match the increased load and to return to the set speed. From this example, a few deductions are possible:

» the speed accuracy is virtually independent of load and motor, but depends on the quality of the sensor signal and the speed and control algorithm of the drive;
» the time lag between load perturbation and speed correction depends critically on the speed and resolution of the sensor and on the parameters of the electronic drive.

Modern brushless servo drives react to sensor signals with time lags in the order of a millisecond or less, providing for very high loop performance.
At this level, however, the propagation time through the mechanical linkages often becomes the prime limit to the system dynamics.
As an example, consider a system in which a servo motor drives a constant speed, large inertia load through a timing belt. The timing belt has a finite, and significant, elasticity. Analyzing a speed correction at the millisecond timescale, the following sequence is obtained:

» the drive sets a current level through the motor which applies a torque almost instantly;
» initially, while the belt is being stretched, the load does not accelerate as fast as the motor;
» consequently, the motor reaches the set speed before the load; the sensor, on the motor, cuts the current and consequently the torque;
» the increased tension of the belt slows the motor down forcing the drive to increase the current again, and a new cycle is initiated.

In this example, the system is oscillating; the motor torque pulsates and so does the load speed. The end result is noise, overheat and wear, none of which are clearly due to the motor. However, superficial users would claim that the motor is noisy; in practice, if this motor is replaced with an older generation, large and high inertia drive, the problem would likely disappear, increasing the feeling that the new drives are not adequate.
This simplistic understanding is erroneous. In fact, analyzing the above example:

» the instability is due to the mismatch between the system reaction speed (high) and the mechanical propagation or reaction time (long); the motor reacts quicker than the time required by the system to settle through the new torque configuration;
» the possible solutions are:
either to reduce the mechanical system reaction time, by stiffening the linkage and lowering the inertias, e.g. going direct drive or replacing the belt with a gearbox; or to lower the speed of the control system, giving up some control bandwidth which would have been achievable with the new technology.

The second solution, of course, sells away some quality, as it impairs the capability to react quickly to sudden load variations. In fact, older drives, which were anyway slower, compensated the lack of speed with a large motor inertia; on the other side, brushless motors, where inertia is minimized, need a good bandwidth to guarantee good rotation accuracy.
All this explains why brushless drives are relatively unforgiving of mechanical inaccuracies, backlash, keyways etc.; for this reason, the best motors are manufactured with round shaft without keyway, for interference coupling with conical fittings (e.g. Ring-feder) and their shafts and flanges are machined to a reduced tolerance to remove the need for flexible couplings. If a coupling is needed, it needs to be torsionally stiff, such as the metallic bellows type.
In conclusion:
while traditional drive systems (DC of PM DC, inverter driven AC) would limit themselves, with their own inertia and response time, the performance of the application, the high level of the new brushless drives move the performance threshold above the mechanical limits of most traditional applications. As a result, the design verification of the mechanical

system, and its upgrade to the new requirements, is more important than it used to be up until now.
The success of a new application hinges critically on a good dynamical design of the whole system.
A few rules can also be derived from the simple examples above:

» the speed accuracy does not depend on the motor but on the sensor;
» the following speed, and therefore the ability to compensate for sudden load variations, depends critically on the stiffness and quality of the mechanical linkage.

The motor noise, which is often observed in poor or retrofit applications, is not due either to the motor or the drive but often enough to a "primeval" mechanical linkage. In fact, noise in due to the motor "hunting" for the correct torque; in this situation, the motor is likely to overheat irrespectively of loading.
The same system might have worked well with an older drive, where the large motor inertia "rolls over" all imperfections.
The dynamic study of the application is fundamental to the motor selection.
To this aim, this broad concept can be divided in two elements:

» large signal bandwidth: this is the raw ability to deliver enough torque and speed, in sufficiently short time, to force the load on the desired trajectory. This depends exclusively on motor and load torque and inertia, and can be studied considering all components as infinitely stiff;
» small signal bandwidth or control bandwidth, which relates to the inverse of the settling time. This is necessarily lower than any mechanical resonance frequency in the system; its inverse expresses the settling time of the control loop, i.e. the time required at the end of a motion command to settle in the target position within a required accuracy. Typically, it will be impossible to achieve a settling time better than 2-3 times the damping time of all the oscillations or resonances in the load and linkage.

As an example, consider the indexing axis of a high speed notching machine. The rate target is set at 10 strokes per second, i.e. the drive starts and stops the workpiece in a new position ten times per second. If the whole linkage (shaft, reducer, belts, ball screw etc) has a first resonance frequency of 50 Hz, the system will settle in about 50-60 msec, leaving only 40 msec for the move and the punch! This application is near impossible, as very high torque and accelerations would be needed. However, if the linkage is stiffened, by removing the belt, adopting a larger screw, etc. so that the resonance frequency of the linkage is increased to 100 Hz, the settling time is reduced to 25-30 msec, the time available for the move is doubled, the required torque is halved, and the application is feasible.

Optimal Drive Design: the Transmission Ratio, the Type of Conversione, the Couplings

Brushless motors, like all other motors, are sized on supplied torque and not on output power. In all applications, therefore, low motor speed yields to a low specific power and relatively low efficiency. On the other hand, brushless motors have no minimum speed (the speed depends only on the sensor used; there are applications whose axis speed is 1 revolution/year); as a consequence, a high gearing is advisable only to minimize the motor mass (e.g. with electric traction) or to maximize the efficiency; it is often not advisable from the viewpoint of cost or dynamic performance. Wherever the motor is applied directly on the load, the control bandwidth is maximized because maximum transmission stiffness is achieved; consequently, these applications provide the best position or following accuracy with the shortest settling time.
Before starting with the selection of the right drive for a specific system, it is necessary to know the type of mechanical transmission which can be used. The most common transmissions are the following:

Rotation-rotation conversion

» timing belt;
» reducer with helical wheels and parallel axes;
» cycloid and epicyclic reducer;
» Harmonic Drive™;
» tangent screw reducer or Gleason gears.

Rotational-linear motion conversion

» timing belts;
» pinion-rack;
» metallic band;
» ball screw.

For any transmission system, the load parameters can be transferred to the motor axis as follows.
If n = transmission ratio (ratio between the motor and the load speed, rad/m in the case of a conversion from linear motion):

» Motor torque = Torque (thrust) to the load/n
» Motor speed = Load speed x n
» Load inertia reduced to the motor axis = inertia (or mass) of load/n2

Among all the listed transmissions, the first ones, which are the least expensive, are also the slowest; they result in low control bandwidth (lower than 10 Hz, using a high stiffness belt); for the same reason, it is important to avoid the ratios which make the load inertia transferred to the motor axis too much higher than the motor one. The belt transmission should not be applied for positioning applications with cycle times a lot shorter than one second.
Gear reducers are a good solution, provided that their angular backlash is considerably lower than the accuracy required by the system; the best type of reducer (the most expensive too) is the epicyclic; there are special series of cycloid and epicycloid reducers purpose designed for servo controls, where the angular backlash at the output shaft is limited to 1-3 arc minutes. Such reducers are the only ones that can be specified for applications with control bandwidth higher than 10 Hz. The “servo series” reducers are designed to be coupled directly to the motor with a stiff coupling device, without keyway.

The Harmonic Drive™ gearbox was specifically designed for positioning. It has limited size, high ratio and low backlash. The angular stiffness is not very good and the achievable control bandwidth is in the 10-30 Hz range. Because of its limited efficiency, it should be used for positioning only.
Tangent screw reducers fit in a class apart. These gears, although common and inexpensive, are not suitable for position control. The tangent screw, whose efficiency is based on an effective lubrication, display a low efficiency which drops dramatically at low speed, because below a critical speed the oil film collapses, efficiency drops and a quick wear ensues.

Wherever a rotary to linear conversion is required, ball screws provide a quality solution up to about 4 m/s, especially if they are driven directly by the motor. Direct drive with a low inertia motor generally avoids the need of a torque limiting clutch. For very long movements it is necessary to check the flexure and torsional stiffness of the screw, which may limit the system bandwidth. Longer movements are carried out with rack and pinion, which have always a significant backlash which generally results in limit cycling and motor noise. The traditional backlash elimination methods add stick-slip non linearity instead, and so do friction wheels, typically with similar limit cycling results.
Fast and accurate movements can be obtained with metallic tapes replacing the timing belts with superior stiffness. This technique, while not well known and therefore not standardized, is able to reach excellent performances in the control of small loads (a few kilos).

In general, however, linear motors rest as the best solution for high accuracy control of a linear motion.

In order to select the most suitable reduction method and transmission ratio for a specific application, it is useful to classify first the applications into two broad families:

» Power services: the motor supplies power to a process (spindles, traction, winding, conveying etc.), where the dynamic performance is of marginal importance, the power controlled is significant, the motor cost is an important fraction of the system cost;
» Position control or high rate cycling (electronic camshaft), in which most of the energy is used to accelerate, to brake and to position objects in a short time and with a more or less high accuracy.

Traditionally, the two above mentioned categories are referred to respectively as spindle drives and axis drive.

In the first case, the dynamic properties are often not important, therefore simple speed reducers are acceptable and, as the power is often relevant, a mechanical transmission with a reduction stage is normally useful. In order to choose the best transmission ratio, consider that up to ~ 4000 RPM, the cost and size of the motor decrease in a quasi linear way with the increase of the transmission ratio. On the contrary, the cost of the transmission increases step by step according to the number of gear stages or pulleys; from an application cost viewpoint, the minimum overall cost can only be found in a few points, precisely:

» either with a direct drive;
» or at the speed corresponding to the maximum ratio which is possible with just one reduction stage;
» or at the speed corresponding to the maximum ratio which is possible with two reduction stages and so on.

The economic optimization, in this case, is carried out checking these points and adding the costs of the motor to that of the reducer.
For all dynamic applications (axes) the situation is completely different. If the torque required in the drive cycle is dominated by the inertial torques both of the motor and of the load, for an increase in the reduction ratio there is a decrease in the impact of the load inertia and an increase of the impact of the motor inertia. Consequently, for an application where the required torque is exclusively inertial, the reduction ratio at which the load inertia, translated to the motor axis, equals the motor inertia (inertial match) is characterized by the minimum motor torque and therefore by the smallest motor.
For this reason, inertial matching was long considered the best gear ratio selection tool. Such rule, on the contrary, is just a useful indication. In fact, the minimum size motor, considering that the cost of a quality reducer can double the cost of the motor, does not correspond to the lowest cost application sizing. Furthermore, the level of quality and performance is determined a lot more by gear backlash and shaft elasticity than by the motor itself. Consequently, a ratio selection which accounts for the motor only is clearly flawed. A better set of rules is the following;

» any transmission ratio higher than the inertial ratio is wrong;
» the best ratio is always lower or equal to the inertial one, and it is obtained considering the motor and reducer costs;
» high ratios always yield a narrower control bandwidth and a lower degree of accuracy (with a higher energetic consumption) than what can be obtained with lower ratios.

These considerations explain the current attempt to replace step down gears with direct drives.
Wherever the load inertia transferred to the motor shaft is more than a few times the motor inertia, however, care must be taken, because the motor inertia is not there to carry out a stabilizing action on the possible mechanical resonances or load disturbance on the system. As a consequence, a high control bandwidth needs to be achieved, to

compensate electronically what is not obtained by inertia alone; to do this, the mechanical linkage in these applications needs to be of high quality, stiff and without backlash (no keyways!).
From an analytical viewpoint, extreme direct drives mandate a check on the torsional stiffness of the system. The torsional stiffness of the motor shaft needs to be considered as well; this, although minimized in the U3 Motor design by means of large shafts, is significant for the long and thin motors. In fact, the U3 Motor range was purposefully overlapped, so that the same torque can be obtained either with a long and narrow motor or with a short and stocky one. For this reason:

» long motors have a minimum moment of inertia; they are intended for high acceleration with low inertia loads;
» stocky motors have a maximum torsional stiffness; they are intended for high inertia loads, where the motor inertia is small compared to the load.

As a reference, the torsional stiffness of a shaft whose diameter is D and whose length is L, made of steel, is:

$$S_m = \frac{\pi}{32} \times \frac{D^4}{L} \times 78,5 \times 10^9 \times \frac{N}{m^2}$$

while the frequency of torsional resonance of a load with inertia JI connected to an axis with torsional stiffness Sm is:

$$F_1 = \frac{1}{(2 \times \pi)} \times \sqrt{\frac{S_m}{JI}}$$

In all applications with large inertia and short settling time, a check on the first torsional resonance frequency is highly advisable.

Control Strategy Selection

All drive system can be configured according to three main control strategies:

» torque control (the speed depends on the load);
» speed control (the torque depends on the load);
» position control (the torque depends on the load)

The first strategy is the easiest to implement and can be used when it is necessary to control a force or a pull (winders/unwinders, textile, tape/paper processing, etc.). Torque control is native, or intrinsic to the brushless motors, which are always current controlled. For this reason, torque control has minimum sensor requirement (just commutation or Hall sensor), is very fast (control bandwidth >300 Hz) and intrinsically stable and robust irrespective of load. Torque controlled drives are simple amplifiers which require no calibration or adjustment whatsoever and are therefore the simplest controllers. Accuracy is not too high due to motor friction, cogging, ripple, sensor drift; typically it can range in the 5-10% area.
In the multi-axes applications with very fast and modern NCs or controller boards, where multiple axes must be linked (multiple electric gears and cams), or with adaptive control or with variable parameters, a simple and effective strategy is to set the drives in torque control mode and to assign the other loops to the NC. In this way the encoders are fed to the NC, all drives are equal, intrinsically stable and need no programming; all the system and control parameters (offsets, PID values, etc) are lumped in the NC or control PC. The drives can be replaced without programming and no download of parameters is necessary. The control signal to the drives is a simple differential torque reference, offset insensitive. The encoders are fed directly to the NC; the drive only reads the commutation system. This simple and elegant approach provides very good performance in multiple systems without incurring the cost and complexity of high speed field buses, which are anyway rather limited in the number of axes and in the achievable speed. On the down side, it downloads on the NC or PC the processing of the encoders, which could be

cumbersome where very high resolution is needed.
Speed control is the most traditional strategy. It usually embodies an integration term so that the speed error is limited to the system offsets. In the digital drives, the speed loop is derived from the space loop (see next).
Position or space control in servo amplifiers is carried out only by digital drives (AX-V). In this way, the steady state position and speed following error is limited to a few points of the sensor, that is in the case of an encoder with 4096 pulse/revolutions, 1/16,000 of a revolution. Position loop capability, inside or outside the drive, is necessary to synchronize several axes (electrical axis or electronic cam).

Check of the Drive and Motor Sizing

After selecting the motor and the transmission, a check of the correct sizing of motor and drive is required. Such check is easy for applications where speed and load are quite steady or which vary on a timescale which is long with respect to the time constant of the motor (or of the electronics). In this case, it is only necessary to check for the maximum load to be within the specified limits of the motor and the electronics.
For the applications where the load varies on a fast cycle, verification should proceed as follows:

1 Trace the speed/time diagram of the cycle, considering that the acquisition of a precise position or speed requires, apart from the time determined by the limits on the speed and acceleration of the system, also a settling time equal to 2-3 times the inverse of the system control bandwidth;

2 Transfer the inertia and the loads of the system to the motor shaft;

3 Calculate the cycle of the accelerations and the inertial torques [acceleration x (motor inertia + load inertia transferred to the motor shaft)], checking also the inertia of couplings, clutches, transmission devices;

4 Add the load on the motor axis to the inertial torque and derive a torque/time diagram in the cycle;

5 By inspection of the torque vs. time diagram obtain the root mean square value of the torque: e.g. divide the cycle into time segments t1,t2....tn inside of which the torque is constant; if the torque values in each segment of the cycle are respectively C1,C2... Cn, the root mean square torque in the cycle is:

6 $$Ceff = \sqrt{\frac{C_1^2 \times t_1 \times C_2^2 \times t_2 \times C_n^2 \times t_n}{(t_1 \times t_2 \times \ldots\ldots\ldots\ldots\ldots t_n)}}$$

7 Calculate the root mean square or effective speed in the cycle veff with the same formula;

8 Calculate the mean torque in the cycle Cave;

9 Calculate the maximum duration time of the maximum torque in the cycle tcmax;

10 Calculate the required torque at the maximum speed Cwmax;

11 Calculate the maximum torque Cpk.

The data thus obtained needs to be compared with the motor and electronic limits to validate the application.

Motor Size Verification

Brushless motors are excellent torque transducers, linear to a peak torque several times the nominal. As a consequence, the obtainable peak torque is usually determined only by the choice of the electronic drive. The correct sizing of the motor is thermal and electric; the optimally sized motor is the one which, on the worst load, settles at the correct temperature rise, usually 40-50°C above the room temperature.

The complete check of the selection of the proper motor is carried out in three steps:

» Control of the peak or demagnetizing torque;
» Thermal dimensioning;
» Electric, or winding, dimensioning.

1 - Demagnetization current check
Compare the peak current, expressed by:

$$I_{pk} = \frac{C_{pk}}{K_t} \times \sqrt{2}$$

with the motor demagnetization current, considering that the motor demagnetization current increases as the temperature decreases. This check is usually meaningful for small motors only.

2 - Temperature rise check
Preliminarily, check that the point Ceff, veff is within in the continuous operation area (S1) of the chosen motor. More accurately, the temperature rise of the motor can be predicted by:

$$\Delta_{mot} = \frac{65}{L_n} \times [(\frac{C_{eff}}{T_n})^2 \times (\frac{\omega_{eff}}{\omega_n})^2 \times L_0]$$

where Ln represents the nominal losses of the motor with temperature rise of 65°C.
If the predicted temperature rise is higher than the motor maximum or acceptable temperature rise, it is necessary to select a larger motor.
NOTE: the excessive temperature rise is generally the only good reason for the use of a larger motor.

3 - Electric sizing check
At the maximum speed, the voltage required by the motor to supply the required torque must be lower or equal to what is available from the drive, for the minimum mains supply voltage which is specified for full specification operation (usually 90% of the nominal voltage).
If Emin is the voltage value which can be supplied by the electronic power supply at the minimum supply voltage, it is necessary to check that:

$$V_{max} = \sqrt{3} \times \sqrt{(K_e \times \frac{\omega_p k}{\sqrt{3}} + \frac{R_w}{2} \times \frac{C_{wmax}}{K_t})^2 + (\frac{C_{wmax}}{K_t} \times \frac{PN}{4} \times \omega_p k \times L_w)^2} \leq E_{min}$$

If this condition is not verified, it is necessary to choose a motor with a higher speed winding; this will of course also require a higher drive current.

WORLDWIDE SUPPORT AND DISTRIBUTION NETWORK

Phase Motion Control Italy
Company headquarters

Phase Motion Control S.p.a.
Via Adamoli 461
16141 Genova, Italy
customercare.it@phase.eu
www.phase.eu

Phase Motion Control, France
Phase Automation S.a.r.l.
22 Rue Jean-Louis Calderon
69120, Vaulx-en-velin
customercare.fr@phase.eu
www.phase-automation.com

Phase Motion Control, Austria
Phase Automation GmbH
Blindendorf 88,
4312 Ried in der Riedmark
customercare.dach@phase.eu
www.phase.eu

Phase Motion Control, U.S.A.
Phase USA, Inc.
587 N. Edgewood Ave
Wood Dale, IL 60191 – USA
www.phaseusa.us

Release 07-2017